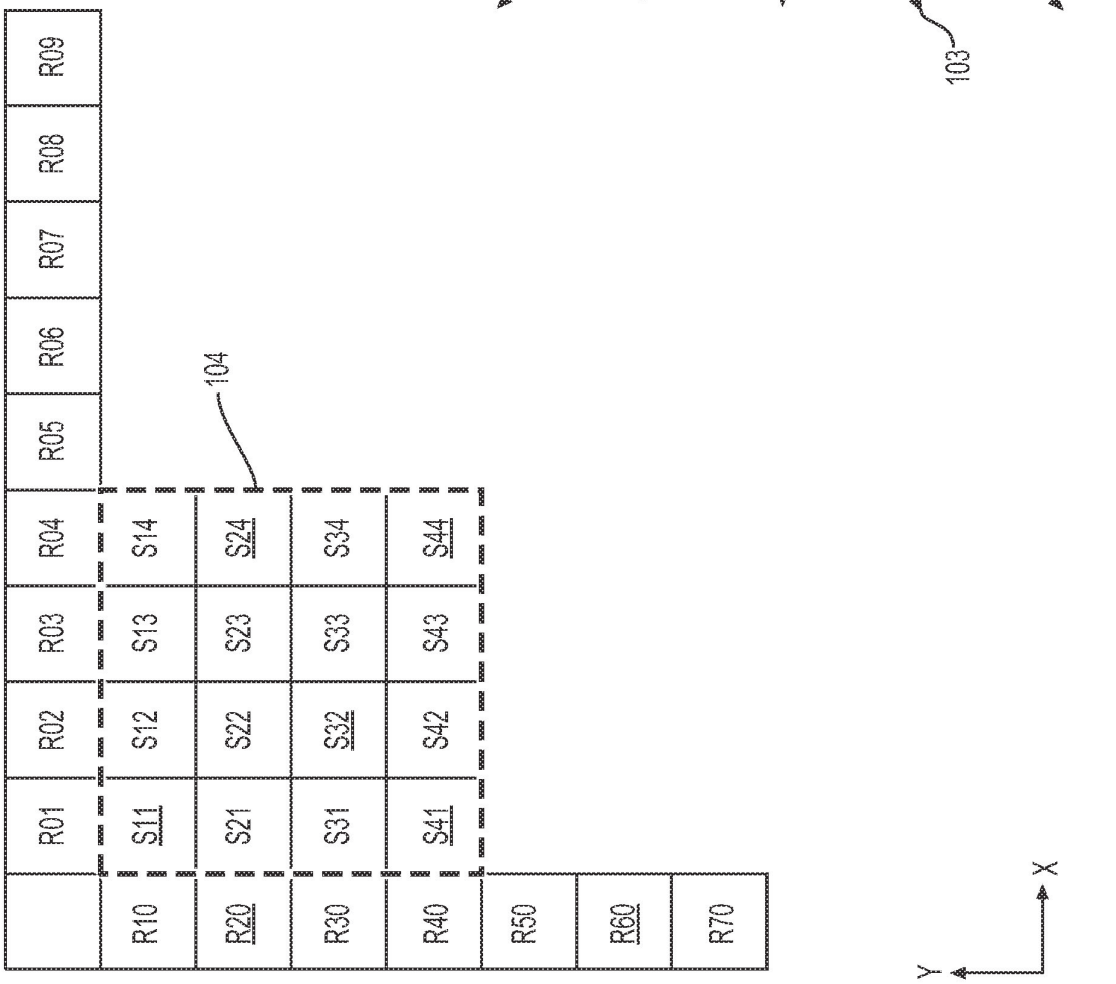
R01
R02
R03
R04
R05
R06
R07
R08
R09
R10
R20
R30
R40
R50
R60
R70
S11
S12
S13
S14
S21
S22
S23
S24
S31
S32
S33
S34
S41
S42
S43
S44
104
101
102
103
X
Y

FIG. 1

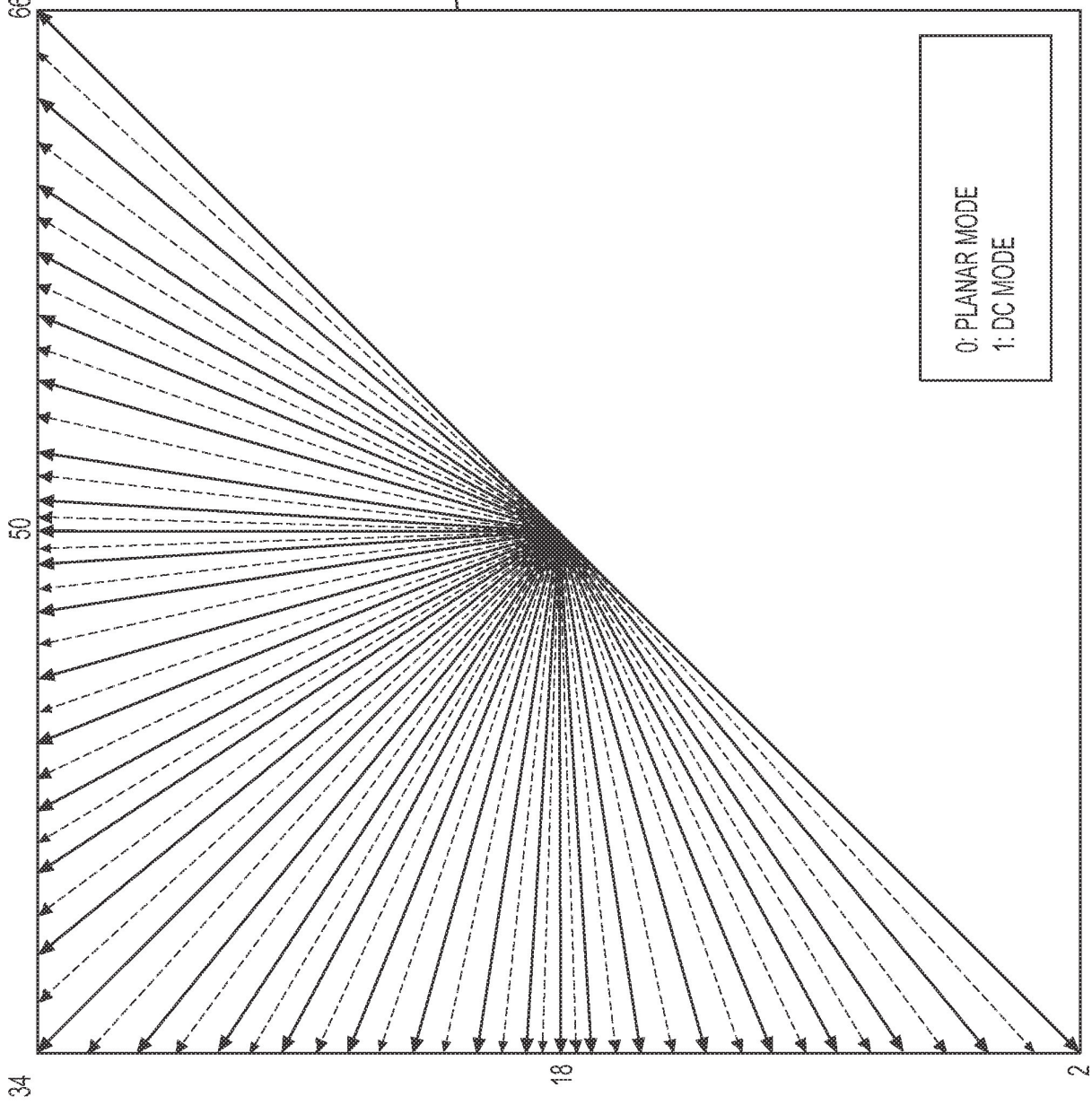

FIG. 2

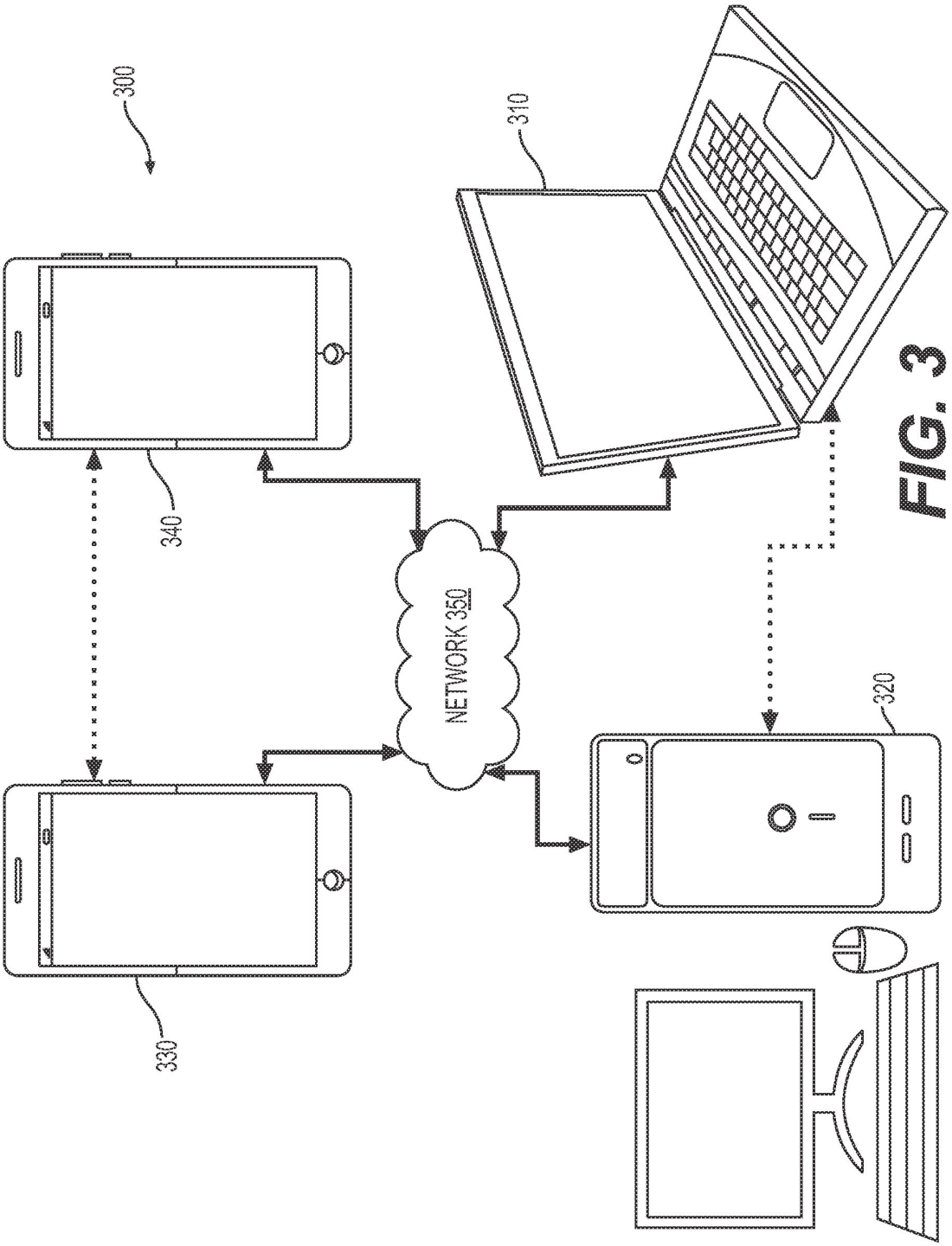

FIG. 3

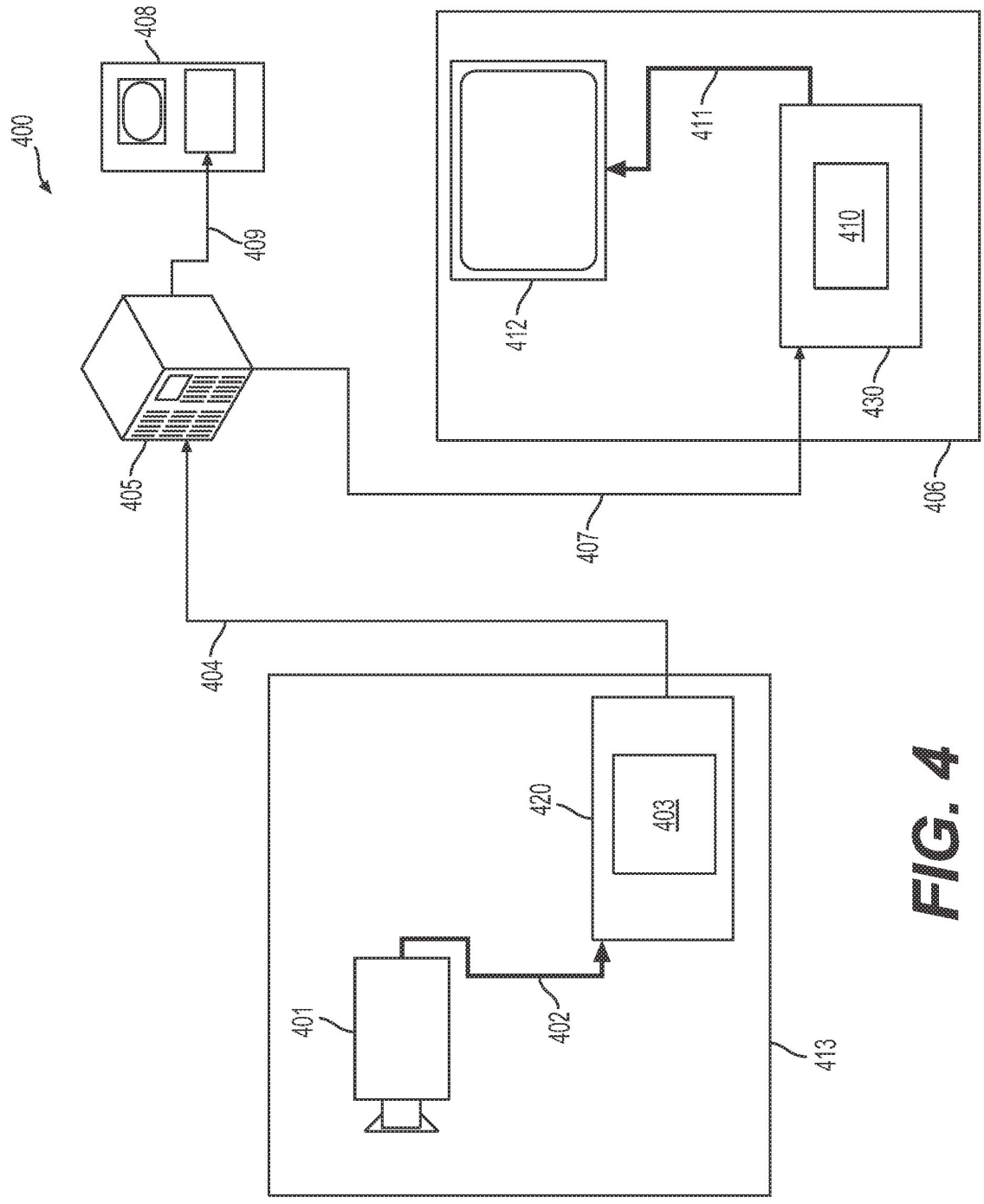

FIG. 4

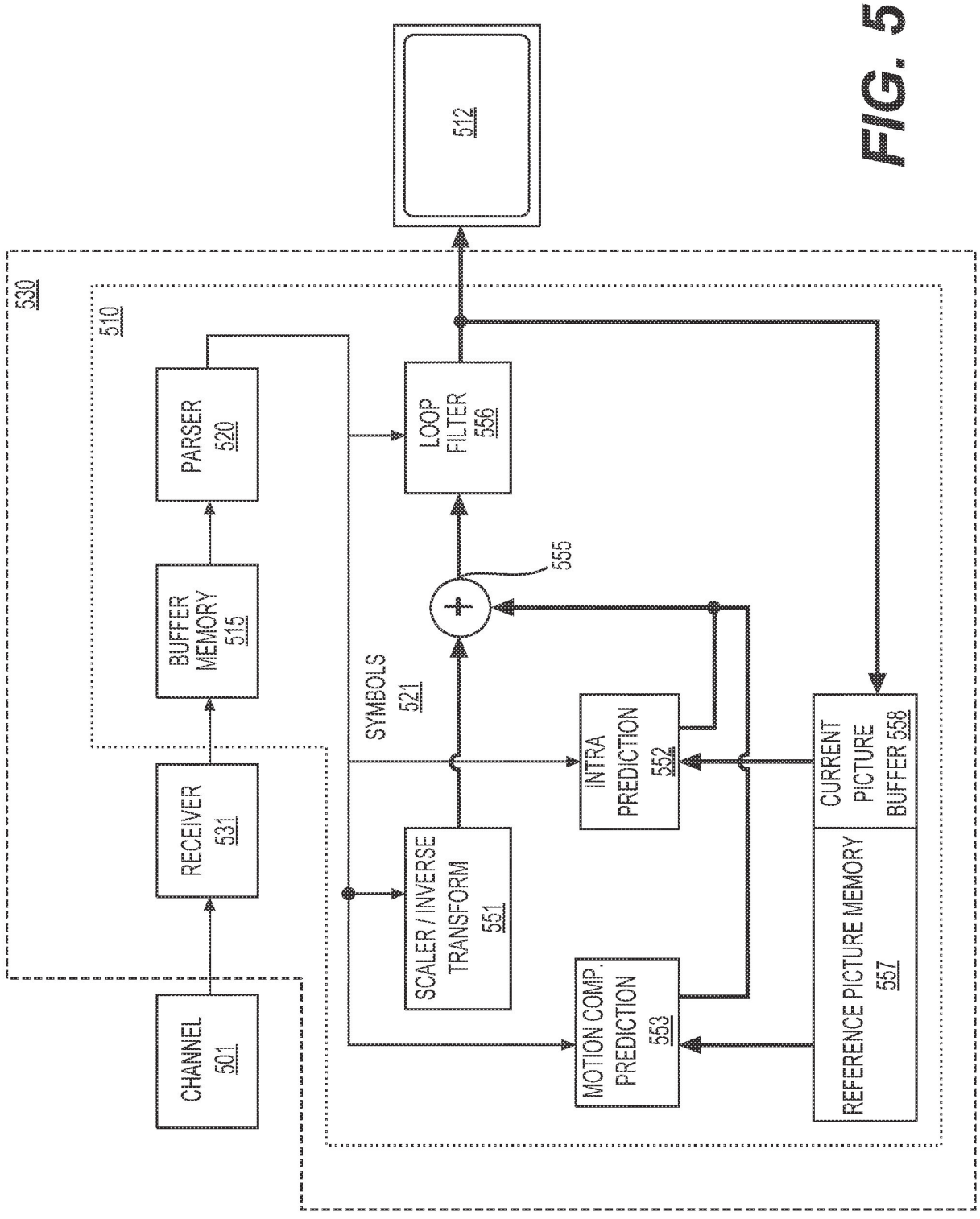
512
530
510
PARSER 520
BUFFER MEMORY 515
RECEIVER 531
CHANNEL 501
LOOP FILTER 556
555
SYMBOLS 521
SCALER / INVERSE TRANSFORM 551
INTRA PREDICTION 552
MOTION COMP. PREDICTION 553
CURRENT PICTURE BUFFER 558
REFERENCE PICTURE MEMORY 557

FIG. 5

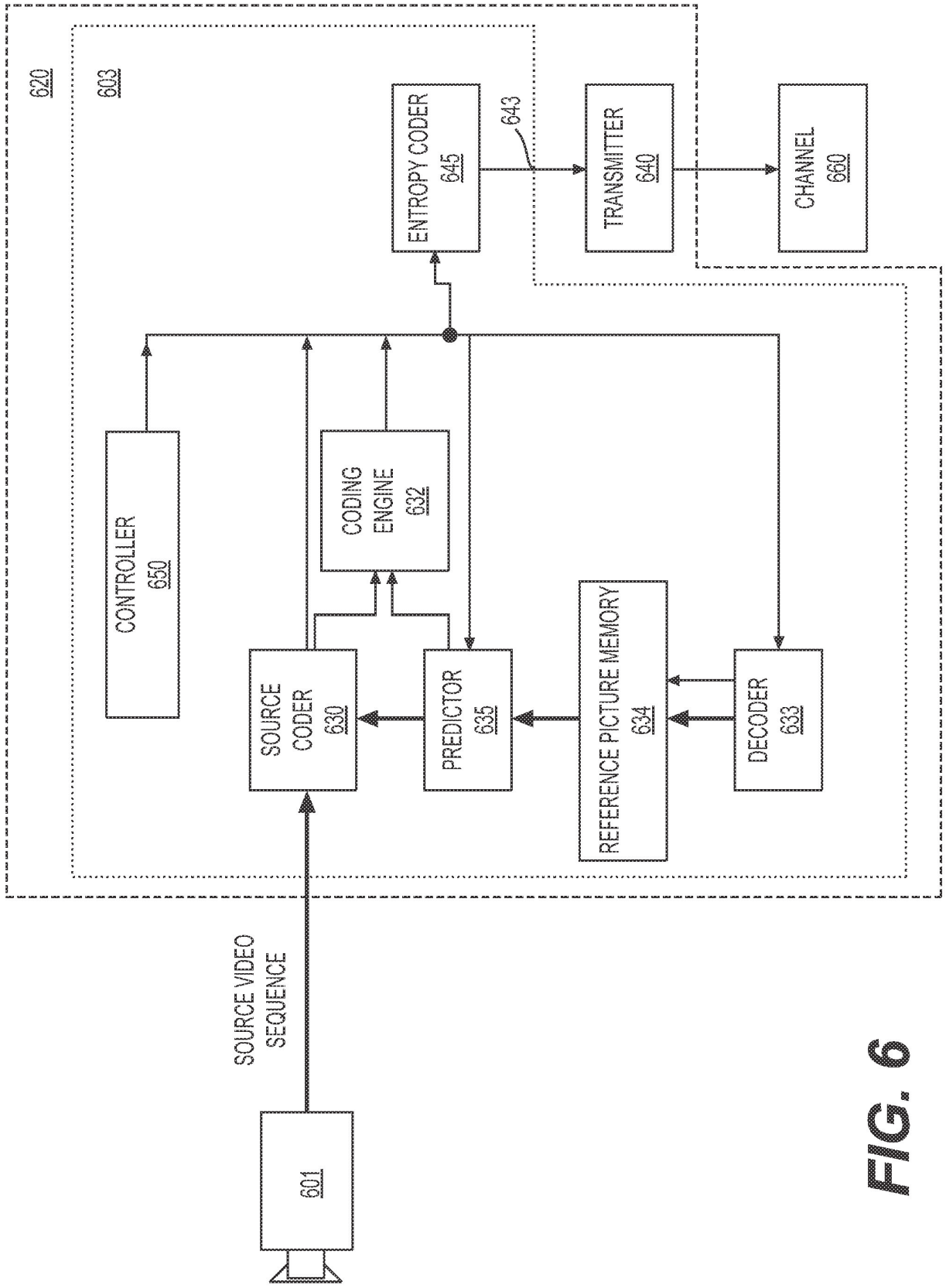
620
603
ENTROPY CODER
645
643
TRANSMITTER
640
CHANNEL
660
CONTROLLER
650
CODING
ENGINE
632
SOURCE
CODER
630
PREDICTOR
635
REFERENCE PICTURE MEMORY
634
DECODER
633
SOURCE VIDEO
SEQUENCE
601

FIG. 6

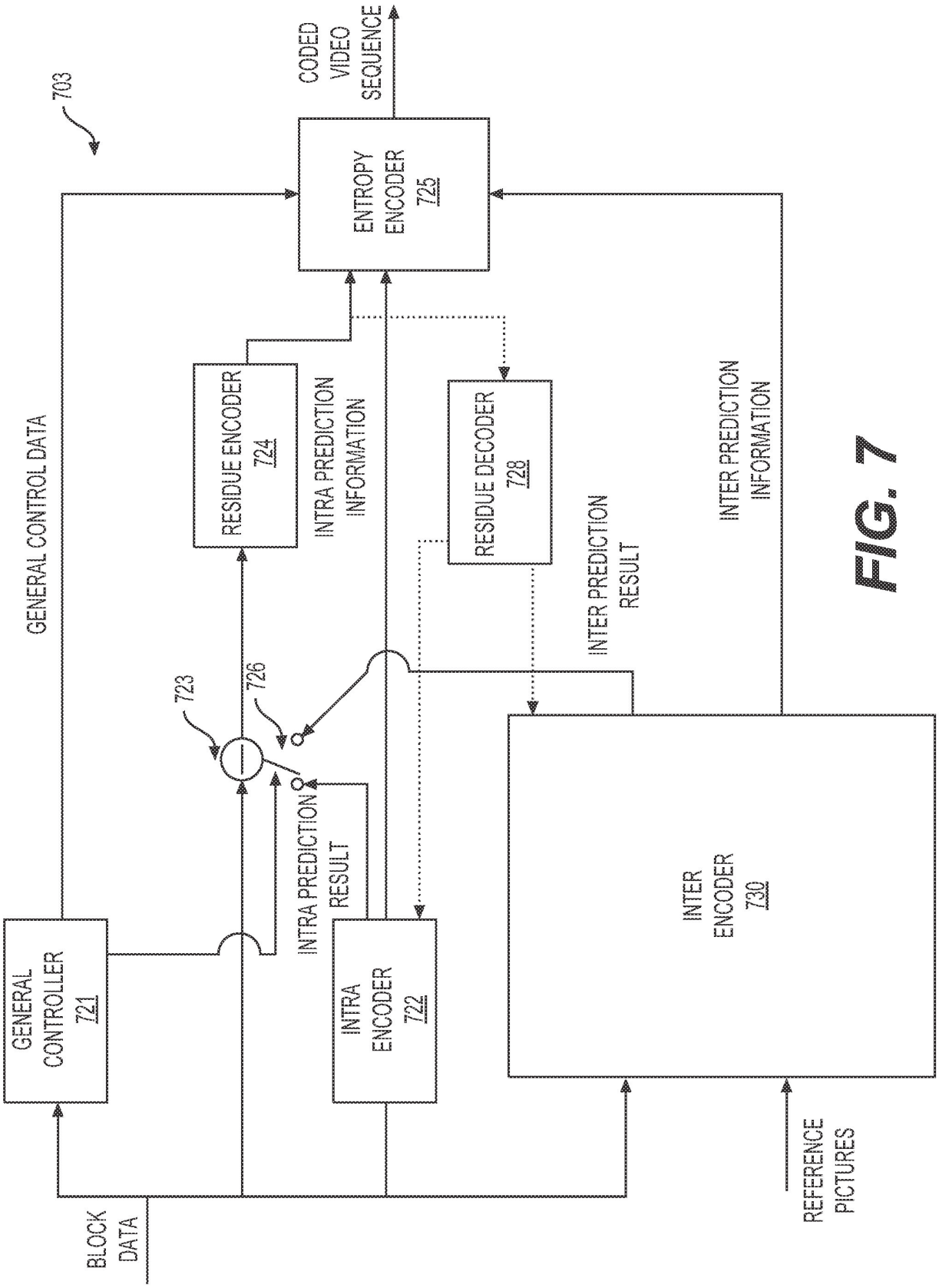
703
CODED VIDEO SEQUENCE
ENTROPY ENCODER 725
GENERAL CONTROL DATA
RESIDUE ENCODER 724
INTRA PREDICTION INFORMATION
RESIDUE DECODER 728
INTER PREDICTION RESULT
INTER PREDICTION INFORMATION
723
726
INTRA PREDICTION RESULT
GENERAL CONTROLLER 721
INTRA ENCODER 722
INTER ENCODER 730
BLOCK DATA
REFERENCE PICTURES

FIG. 7

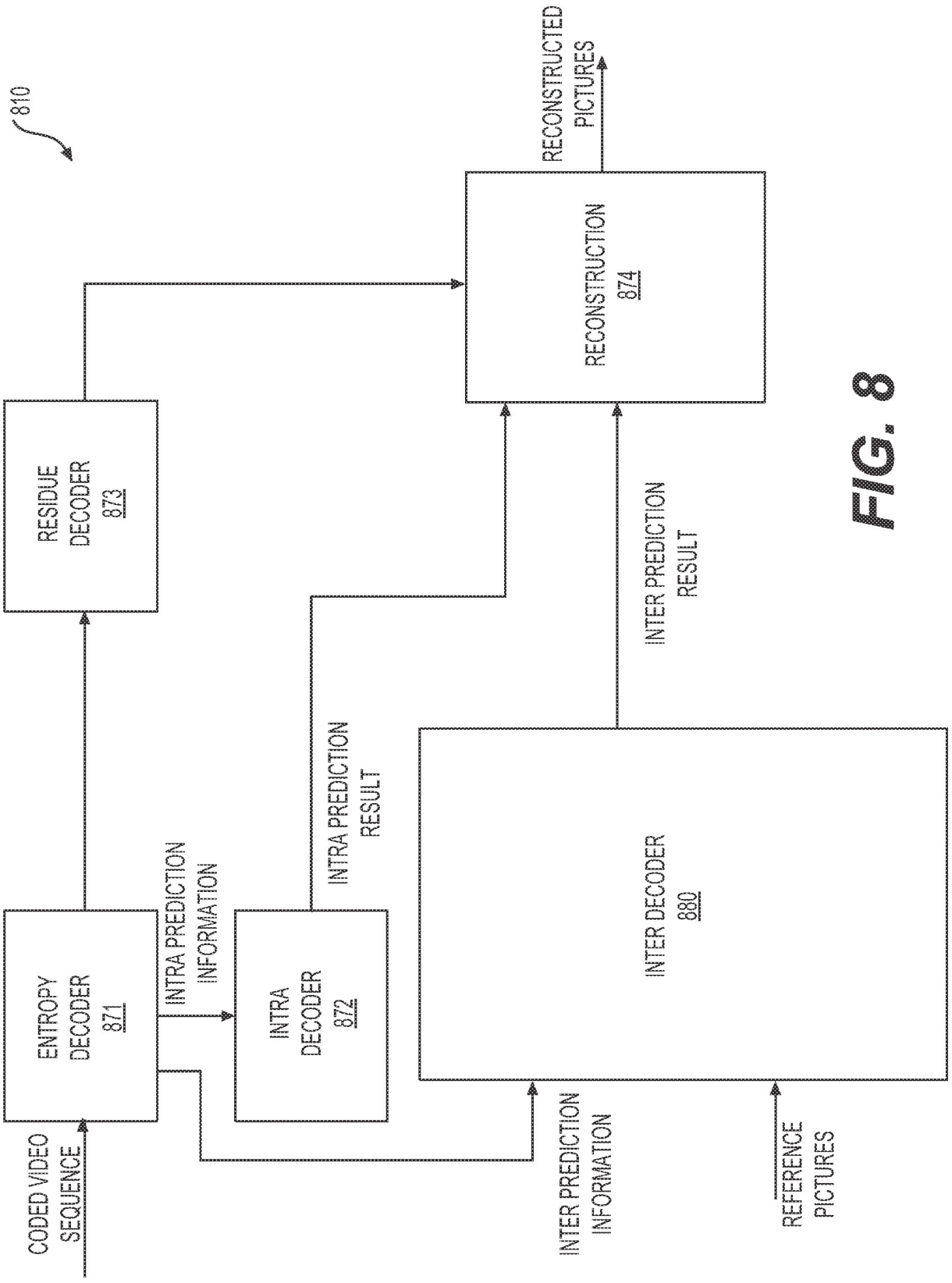
810
CODED VIDEO SEQUENCE
ENTROPY DECODER 871
INTRA PREDICTION INFORMATION
INTRA DECODER 872
INTRA PREDICTION RESULT
RESIDUE DECODER 873
INTER PREDICTION INFORMATION
INTER DECODER 880
REFERENCE PICTURES
INTER PREDICTION RESULT
RECONSTRUCTION 874
RECONSTRUCTED PICTURES

FIG. 8

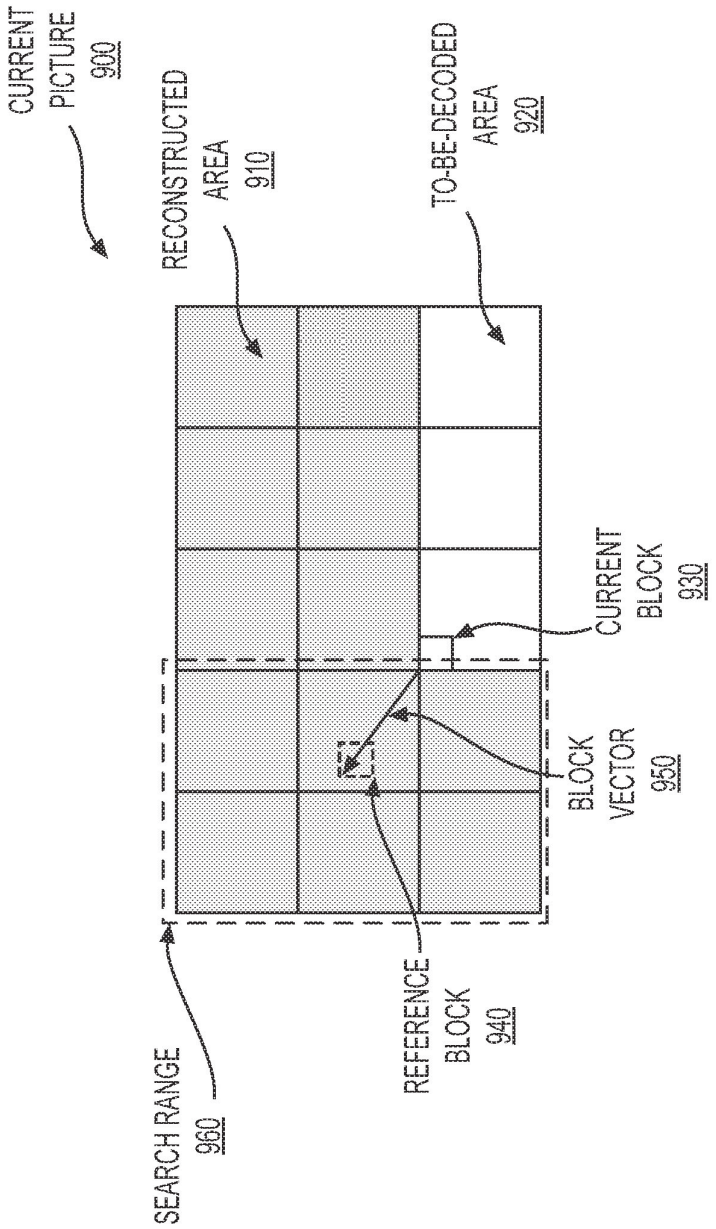
CURRENT PICTURE 900
RECONSTRUCTED AREA 910
TO-BE-DECODED AREA 920
CURRENT BLOCK 930
BLOCK VECTOR 950
REFERENCE BLOCK 940
SEARCH RANGE 960

FIG. 9

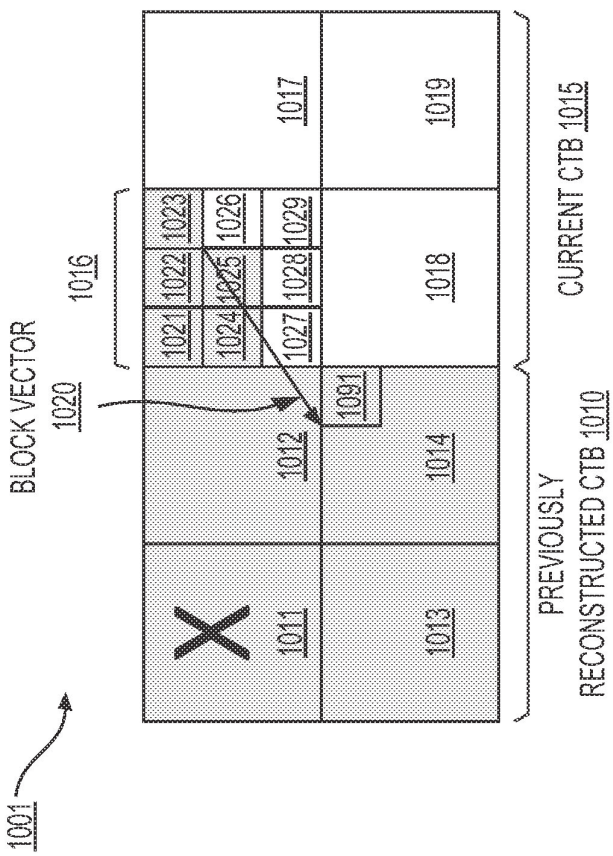
1001
BLOCK VECTOR
1020
1016
1011
1012
1013
1014
1017
1018
1019
1021
1022
1023
1024
1025
1026
1027
1028
1029
1091
PREVIOUSLY
RECONSTRUCTED CTB 1010
CURRENT CTB 1015

FIG. 10

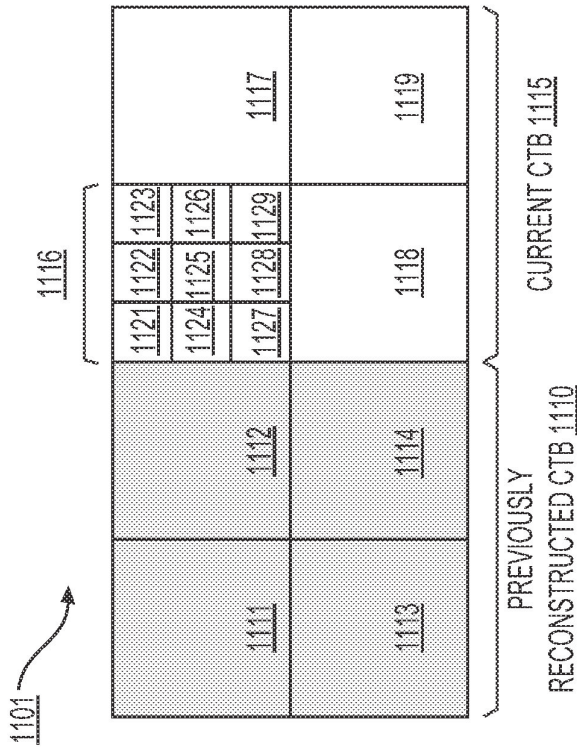
1101
1111
1112
1113
1114
1116
1121
1122
1123
1124
1125
1126
1127
1128
1129
1117
1118
1119
PREVIOUSLY RECONSTRUCTED CTB 1110
CURRENT CTB 1115

FIG. 11

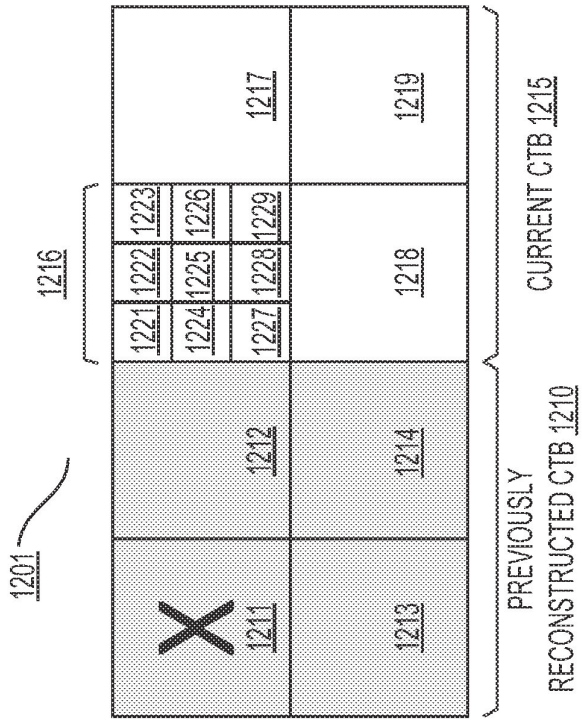
1201
1216
1221
1222
1223
1224
1225
1226
1227
1228
1229
1211
1212
1213
1214
1217
1218
1219
PREVIOUSLY RECONSTRUCTED CTB 1210
CURRENT CTB 1215

FIG. 12A

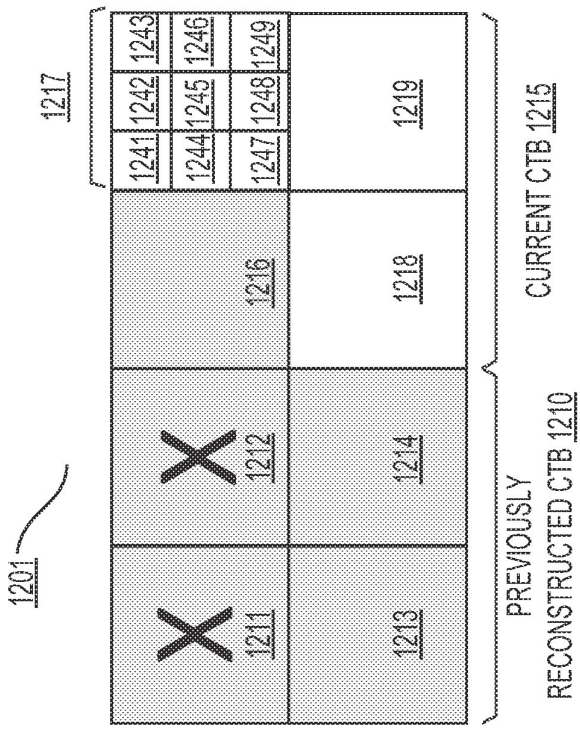
1201
1217
1241
1242
1243
1244
1245
1246
1247
1248
1249
1211
1212
1216
1213
1214
1218
1219
PREVIOUSLY RECONSTRUCTED CTB 1210
CURRENT CTB 1215

FIG. 12B

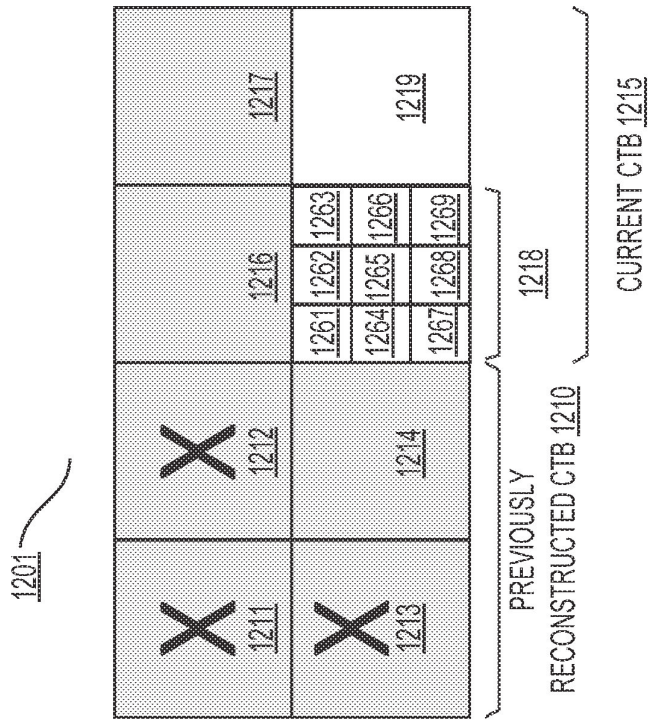
1201
1211
1212
1213
1214
1216
1217
1219
1261
1262
1263
1264
1265
1266
1267
1268
1269
PREVIOUSLY RECONSTRUCTED CTB 1210
1218
CURRENT CTB 1215

FIG. 12C

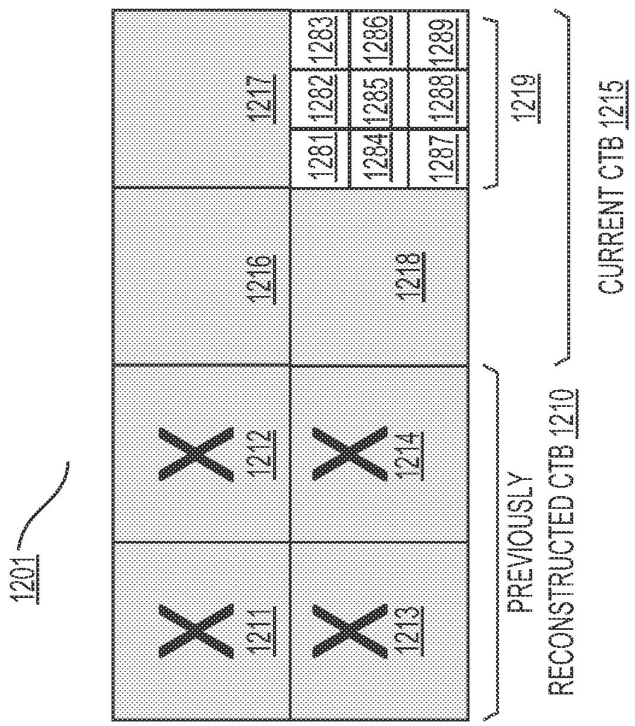
1201
1211
1212
1216
1217
1213
1214
1218
1281
1282
1283
1284
1285
1286
1287
1288
1289
PREVIOUSLY RECONSTRUCTED CTB 1210
1219
CURRENT CTB 1215

FIG. 12D

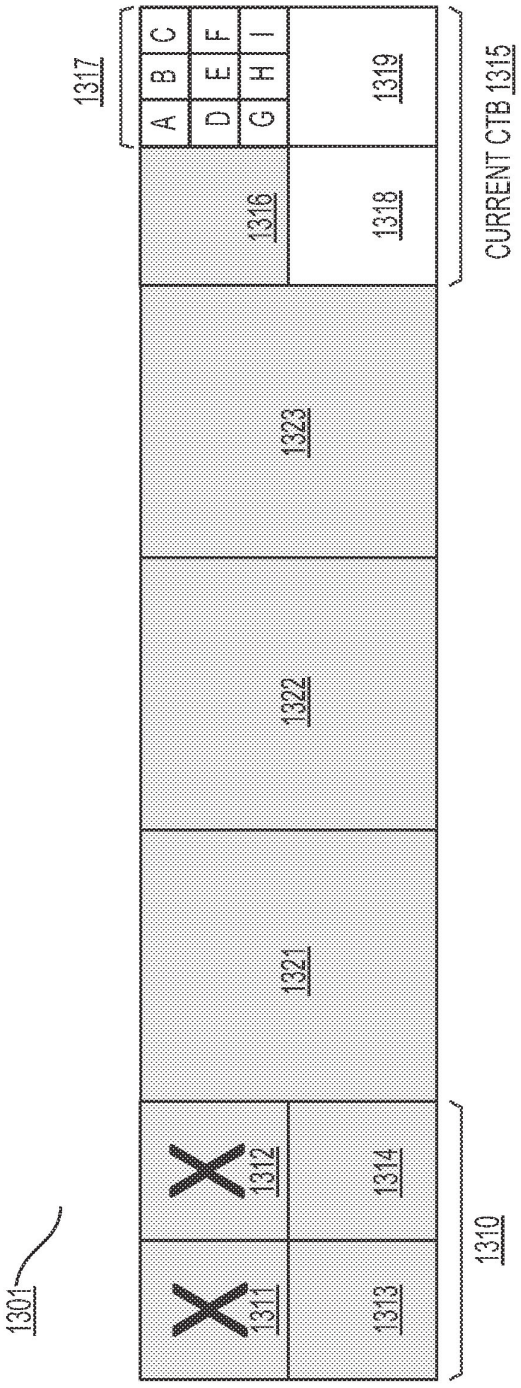
1301
1310
1311
1312
1313
1314
1321
1322
1323
1316
1317
A
B
C
D
E
F
G
H
I
1318
1319
CURRENT CTB 1315

FIG. 13

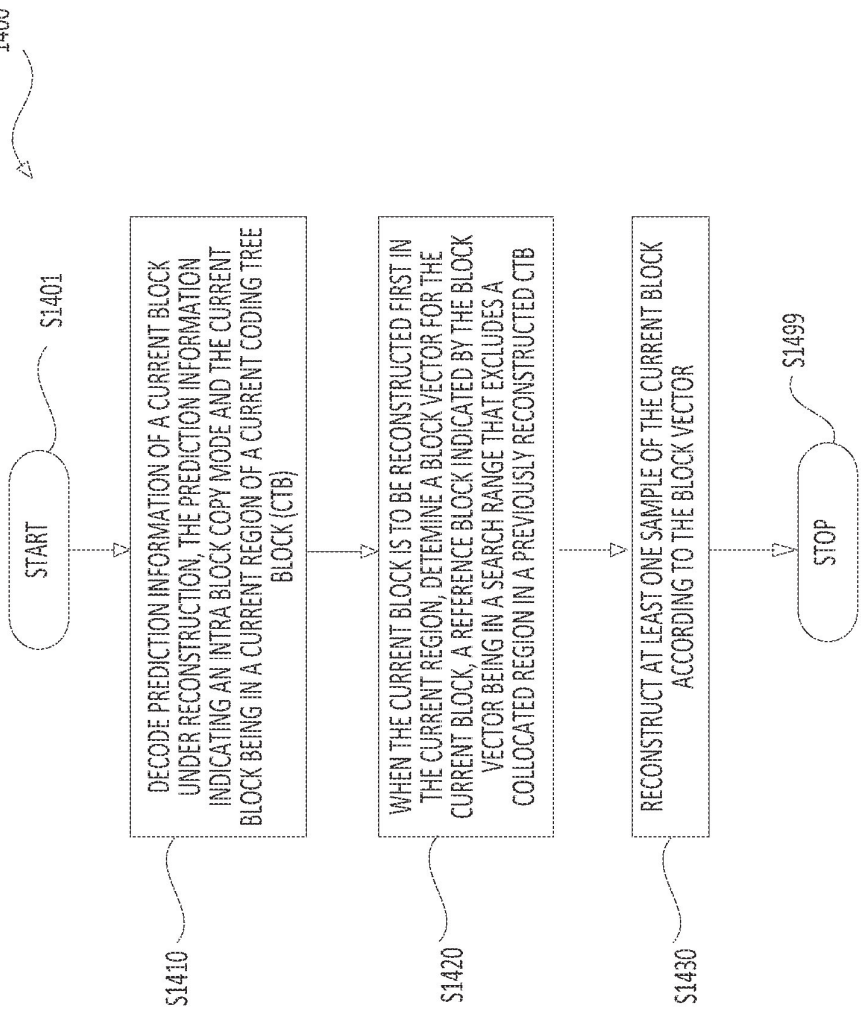
1400
START
S1401
DECODE PREDICTION INFORMATION OF A CURRENT BLOCK UNDER RECONSTRUCTION, THE PREDICTION INFORMATION INDICATING AN INTRA BLOCK COPY MODE AND THE CURRENT BLOCK BEING IN A CURRENT REGION OF A CURRENT CODING TREE BLOCK (CTB)
S1410
WHEN THE CURRENT BLOCK IS TO BE RECONSTRUCTED FIRST IN THE CURRENT REGION, DETEMINE A BLOCK VECTOR FOR THE CURRENT BLOCK, A REFERENCE BLOCK INDICATED BY THE BLOCK VECTOR BEING IN A SEARCH RANGE THAT EXCLUDES A COLLOCATED REGION IN A PREVIOUSLY RECONSTRUCTED CTB
S1420
RECONSTRUCT AT LEAST ONE SAMPLE OF THE CURRENT BLOCK ACCORDING TO THE BLOCK VECTOR
S1430
STOP
S1499

FIG. 14

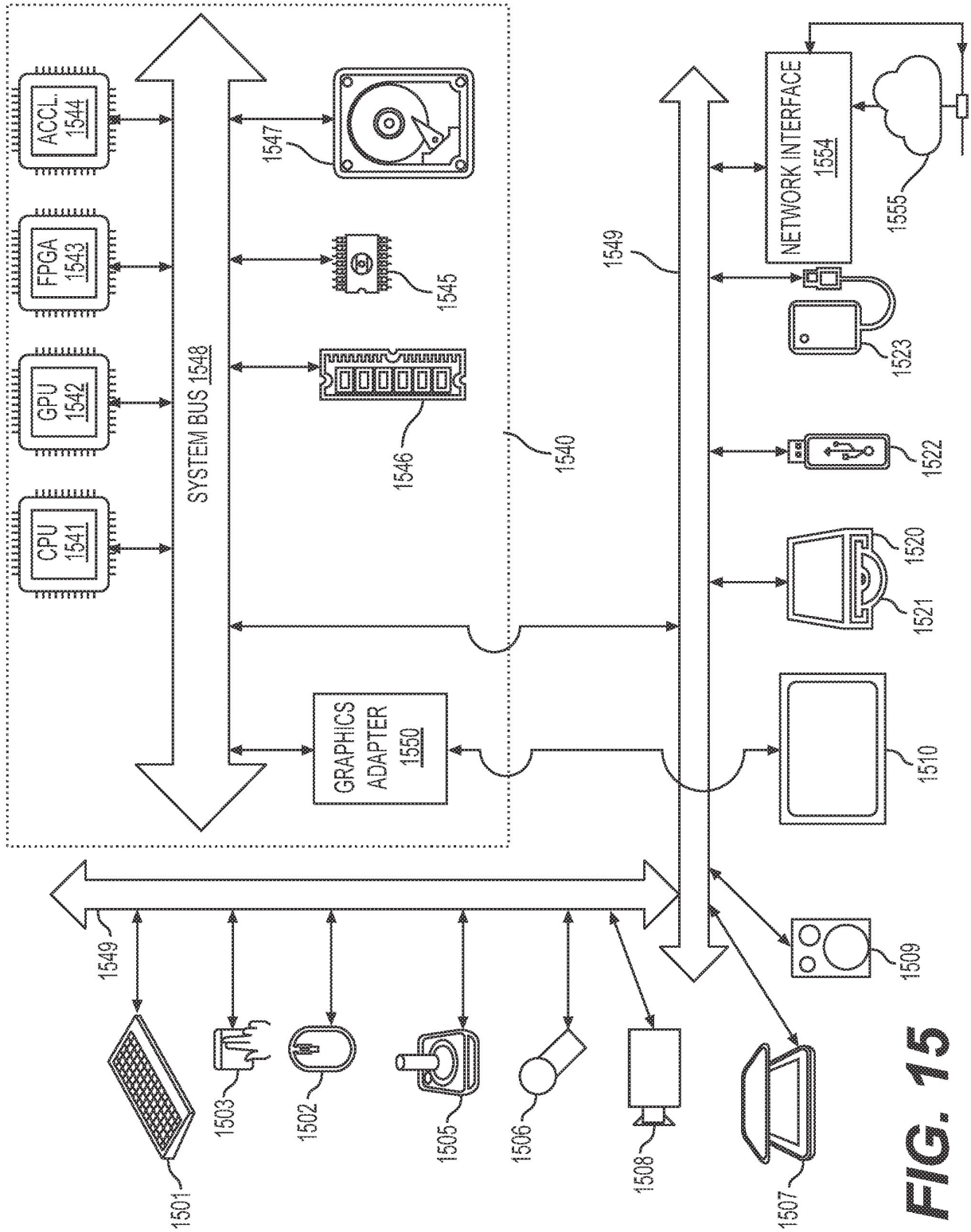
CPU 1541
GPU 1542
FPGA 1543
ACCL. 1544
SYSTEM BUS 1548
GRAPHICS ADAPTER 1550
1547
1545
1546
1540
1549
NETWORK INTERFACE 1554
1555
1523
1522
1520
1521
1510
1509
1501
1503
1502
1505
1506
1508
1507

FIG. 15