(12) INTERNATIONAL APPLICATION PUBLISHED UNDER THE PATENT COOPERATION TREATY (PCT)

(19) World Intellectual Property Organization
International Bureau

(43) International Publication Date
6 November 2008 (06.11.2008)

PCT

(10) International Publication Number
WO 2008/131903 A1

(51) International Patent Classification:
G10L 19/00 (2006.01) *H04S 3/02* (2006.01)

(21) International Application Number:
PCT/EP2008/003282

(22) International Filing Date: 23 April 2008 (23.04.2008)

(25) Filing Language: English

(26) Publication Language: English

(30) Priority Data:
60/914,267 26 April 2007 (26.04.2007) US

(71) Applicants *(for all designated States except US)*: **DOLBY SWEDEN AB** [SE/SE]; Gävlegatan 12 A, S-113 30 Stockholm (SE). **FRAUNHOFER-GESELLSCHAFT ZUR FÖRDERUNG DER ANGEWANDTEN FORSCHUNG E.V.** [DE/DE]; Hansastrasse 27c, München 80686 (DE).

(72) Inventors; and

(75) Inventors/Applicants *(for US only)*: **ENGDEGARD, Jonas** [SE/SE]; Wenströmsvägen 6, 2tr, S-11543 Stockholm (SE). **VILLEMORS, Lars** [DK/SE]; Mandolinvägen 22, 175 56 Järfälla (SE). **PURNHAGEN, Heiko** [DE/SE]; Gjuteribacken 17, S-172 65 Sundbyberg (SE). **RESCH, Barbara** [DE/SE]; Hagalundsgatan 12,, S-16963 Solna (SE). **FALCH, Cornelia** [AT/DE]; Kasseler Str. 12, 90491 Nürnberg (DE). **HERRE, Juergen** [DE/DE]; Hallerstr. 24, 91054 Buckendorf (DE). **HILPERT, Johannes** [DE/DE]; Herrnhüttestrasse 46, 90411 Nürnberg (DE). **HOELZER, Andreas** [AT/DE]; Obere Karlstrasse 23, 91054 Erlangen (DE). **TERENTIEV, Leonid** [RU/DE]; Am Europakanal 36, App. 11, 91056 Erlangen (DE).

(74) Agents: **ZINKLER, Franz** et al.; Patentanwälte Schoppe, Zimmermann, Stöckeler & Zinkler, P.O. Box 246, 82043 Pullach (DE).

(81) Designated States *(unless otherwise indicated, for every kind of national protection available)*: AE, AG, AL, AM,

[Continued on next page]

(54) Title: APPARATUS AND METHOD FOR SYNTHESIZING AN OUTPUT SIGNAL

(57) Abstract: An apparatus for synthesizing a rendered output signal having a first audio channel and a second audio channel includes a decorrelator stage (356) for generating a decorrelator signal based on a downmix signal, and a combiner (364) for performing a weighted combination of the downmix signal and a decorrelated signal based on parametric audio object information (362), downmix information (354) and target rendering information (360). The combiner solves the problem of optimally combining matrixing with decorrelation for a high quality stereo scene reproduction of a number of individual audio objects using a multichannel downmix.

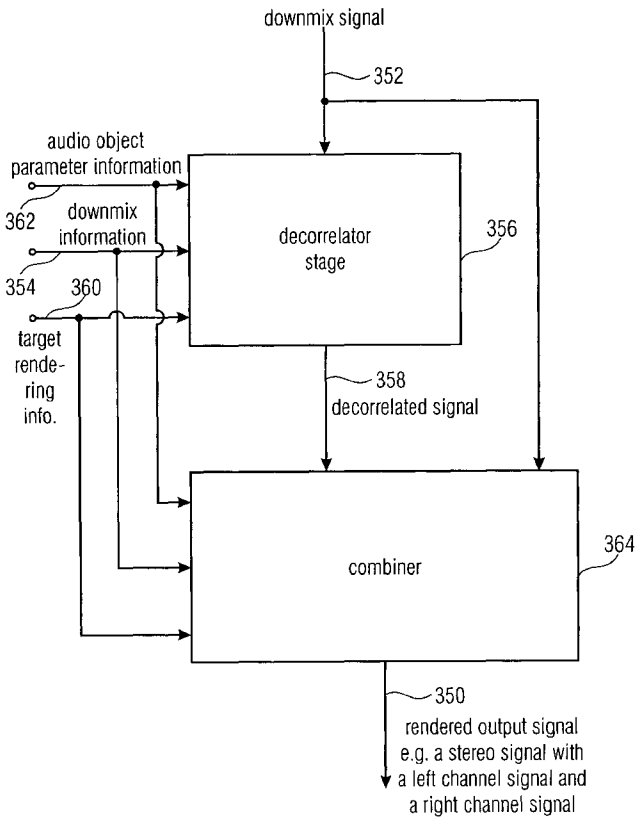

FIGURE 3B

WO 2008/131903 A1

AO, AT, AU, AZ, BA, BB, BG, BH, BR, BW, BY, BZ, CA, CH, CN, CO, CR, CU, CZ, DE, DK, DM, DO, DZ, EC, EE, EG, ES, FI, GB, GD, GE, GH, GM, GT, HN, HR, HU, ID, IL, IN, IS, JP, KE, KG, KM, KN, KP, KR, KZ, LA, LC, LK, LR, LS, LT, LU, LY, MA, MD, ME, MG, MK, MN, MW, MX, MY, MZ, NA, NG, NI, NO, NZ, OM, PG, PH, PL, PT, RO, RS, RU, SC, SD, SE, SG, SK, SL, SM, SV, SY, TJ, TM, TN, TR, TT, TZ, UA, UG, US, UZ, VC, VN, ZA, ZM, ZW.

(84) Designated States *(unless otherwise indicated, for every kind of regional protection available)*: ARIPO (BW, GH, GM, KE, LS, MW, MZ, NA, SD, SL, SZ, TZ, UG, ZM, ZW), Eurasian (AM, AZ, BY, KG, KZ, MD, RU, TJ, TM), European (AT, BE, BG, CH, CY, CZ, DE, DK, EE, ES, FI, FR, GB, GR, HR, HU, IE, IS, IT, LT, LU, LV, MC, MT, NL, NO, PL, PT, RO, SE, SI, SK, TR), OAPI (BF, BJ, CF, CG, CI, CM, GA, GN, GQ, GW, ML, MR, NE, SN, TD, TG).

Published:

— *with international search report*

— *before the expiration of the time limit for amending the claims and to be republished in the event of receipt of amendments*