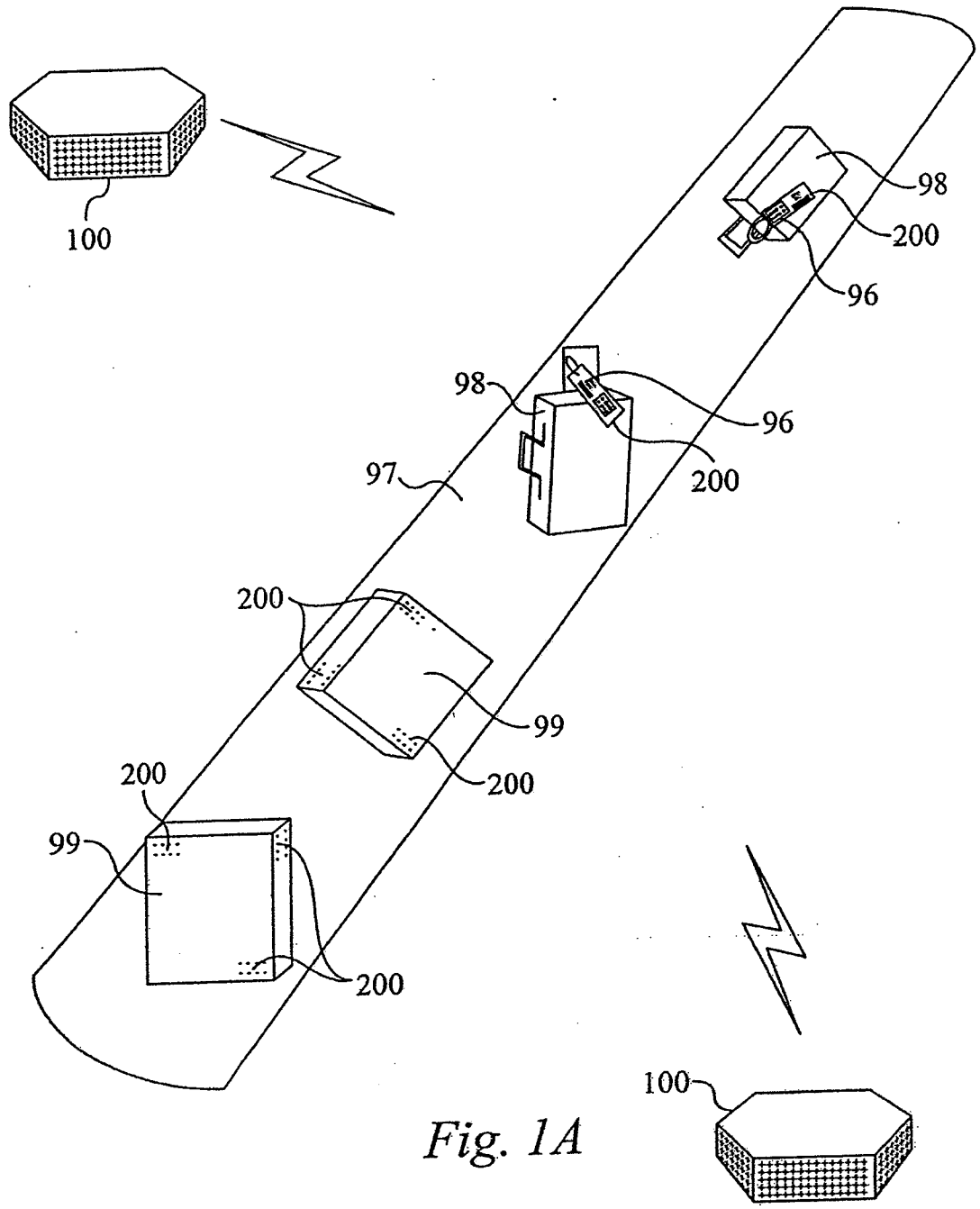

Fig. 1A

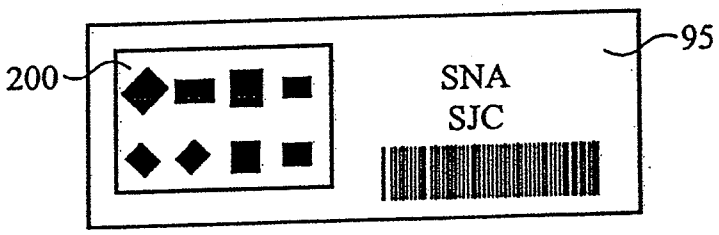

Fig. 1B

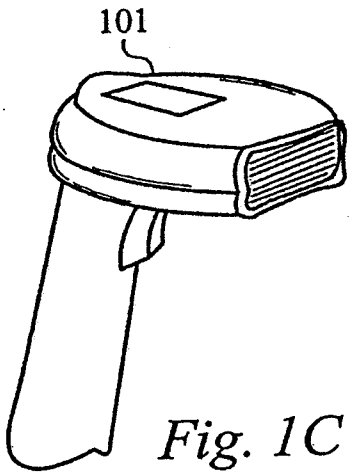

Fig. 1C

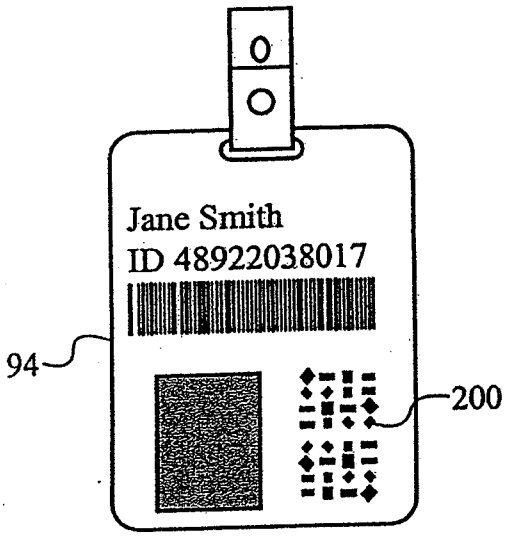

Fig. 1D

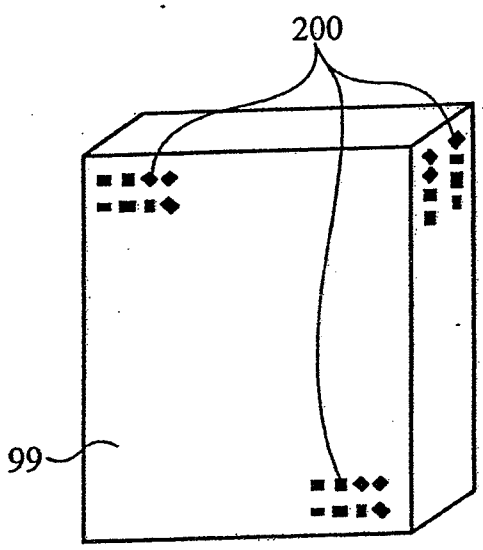

Fig. 1E

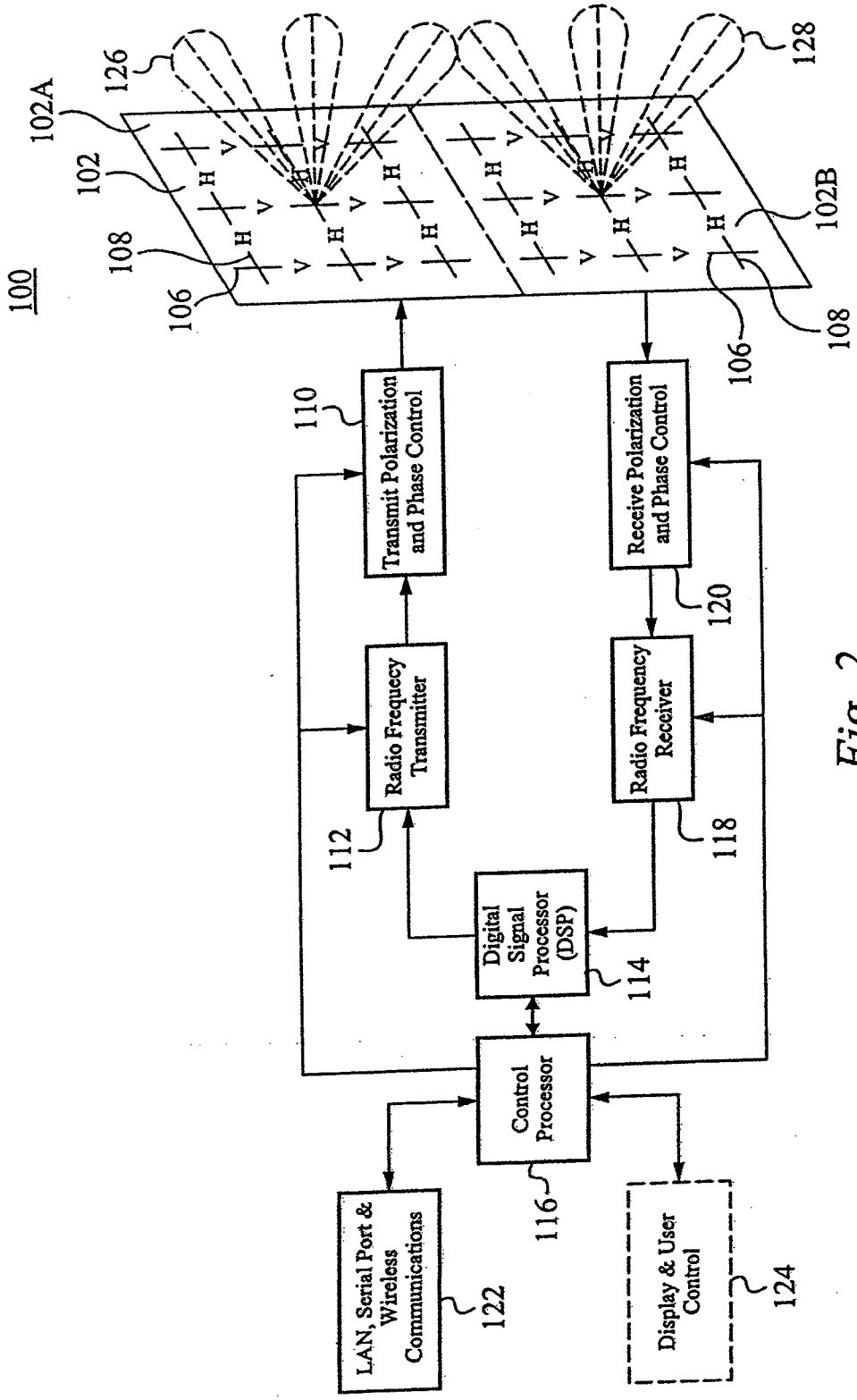
100
102A
102
102B
126
128
108
106
110
120
112
118
114
116
122
124
H
V
Transmit Polarization and Phase Control
Receive Polarization and Phase Control
Radio Frequency Transmitter
Radio Frequency Receiver
Digital Signal Processor (DSP)
Control Processor
LAN, Serial Port & Wireless Communications
Display & User Control

Fig. 2

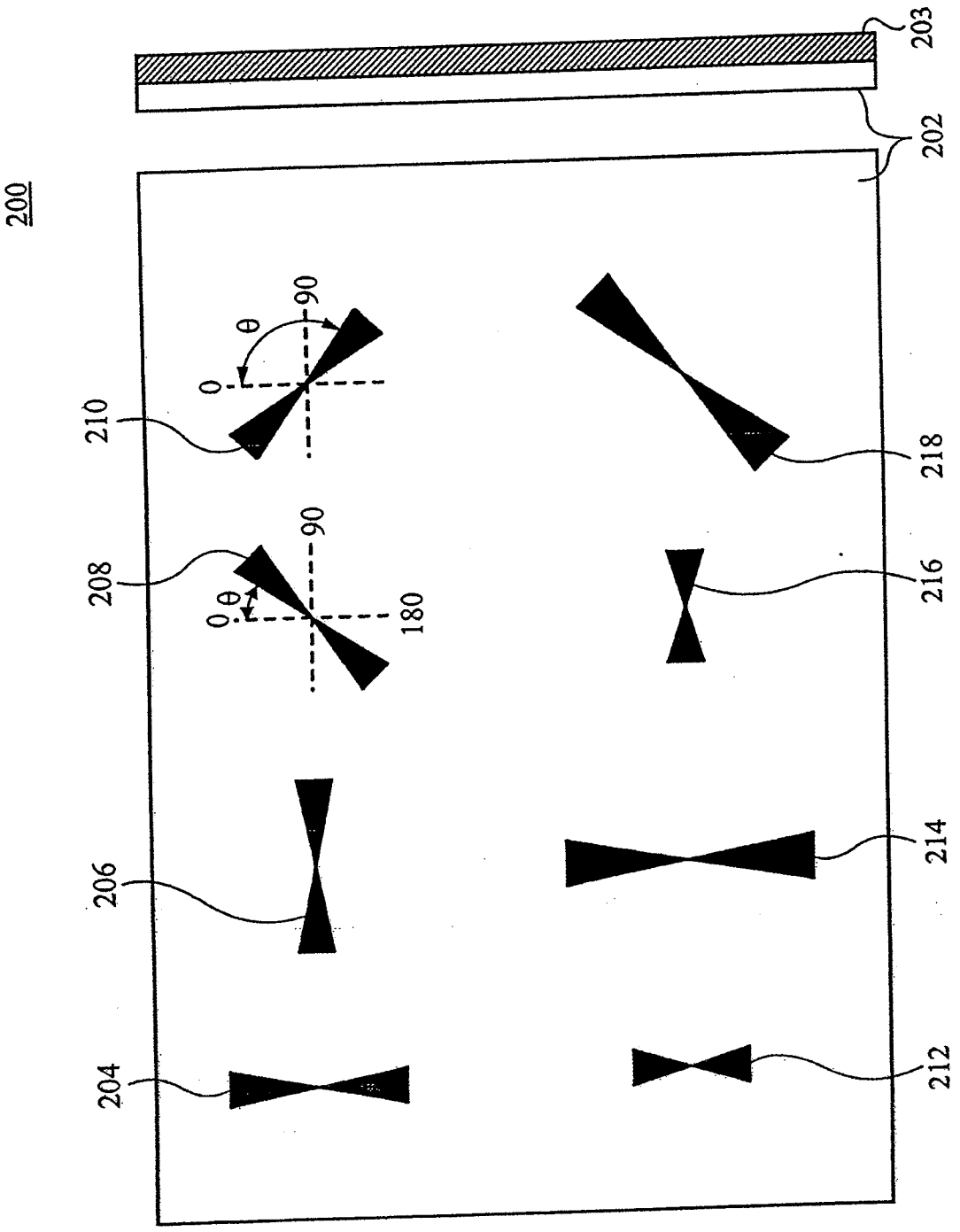

Fig. 3B

Fig. 3A

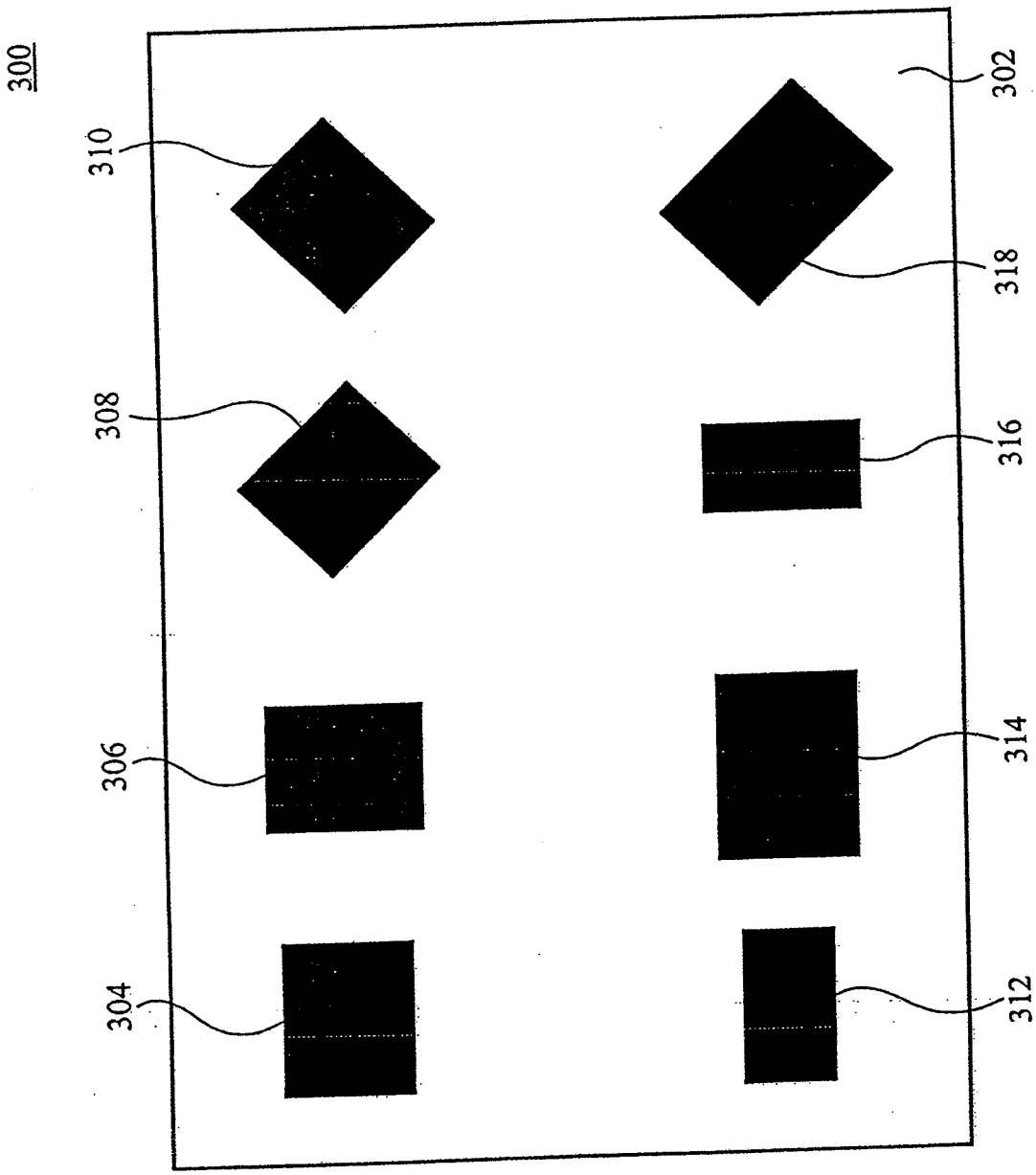

Fig. 3C

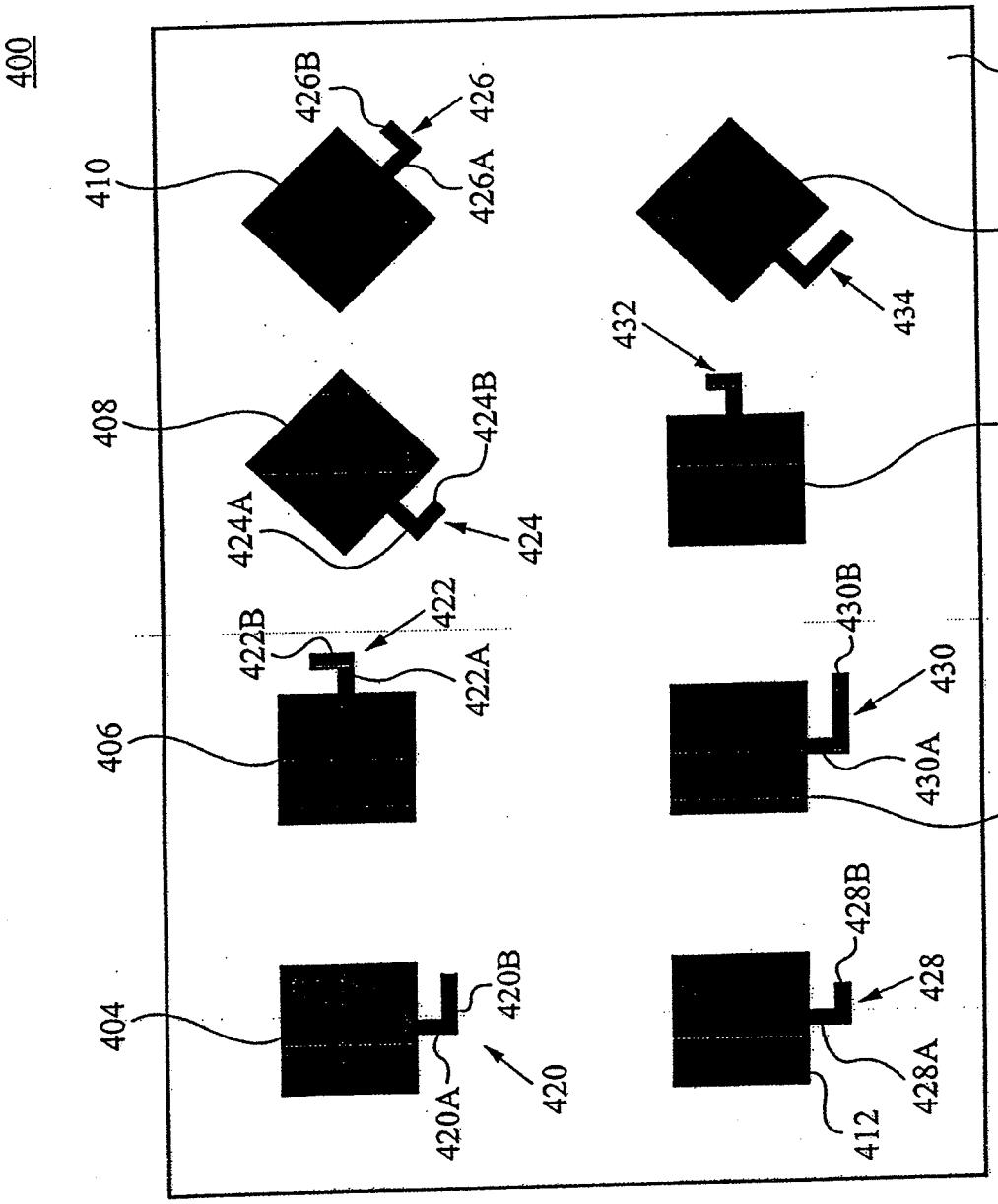
400
402
404
406
408
410
412
414
416
418
420
420A
420B
422
422A
422B
424
424A
424B
426
426A
426B
428
428A
428B
430
430A
430B
432
434

Fig. 4A

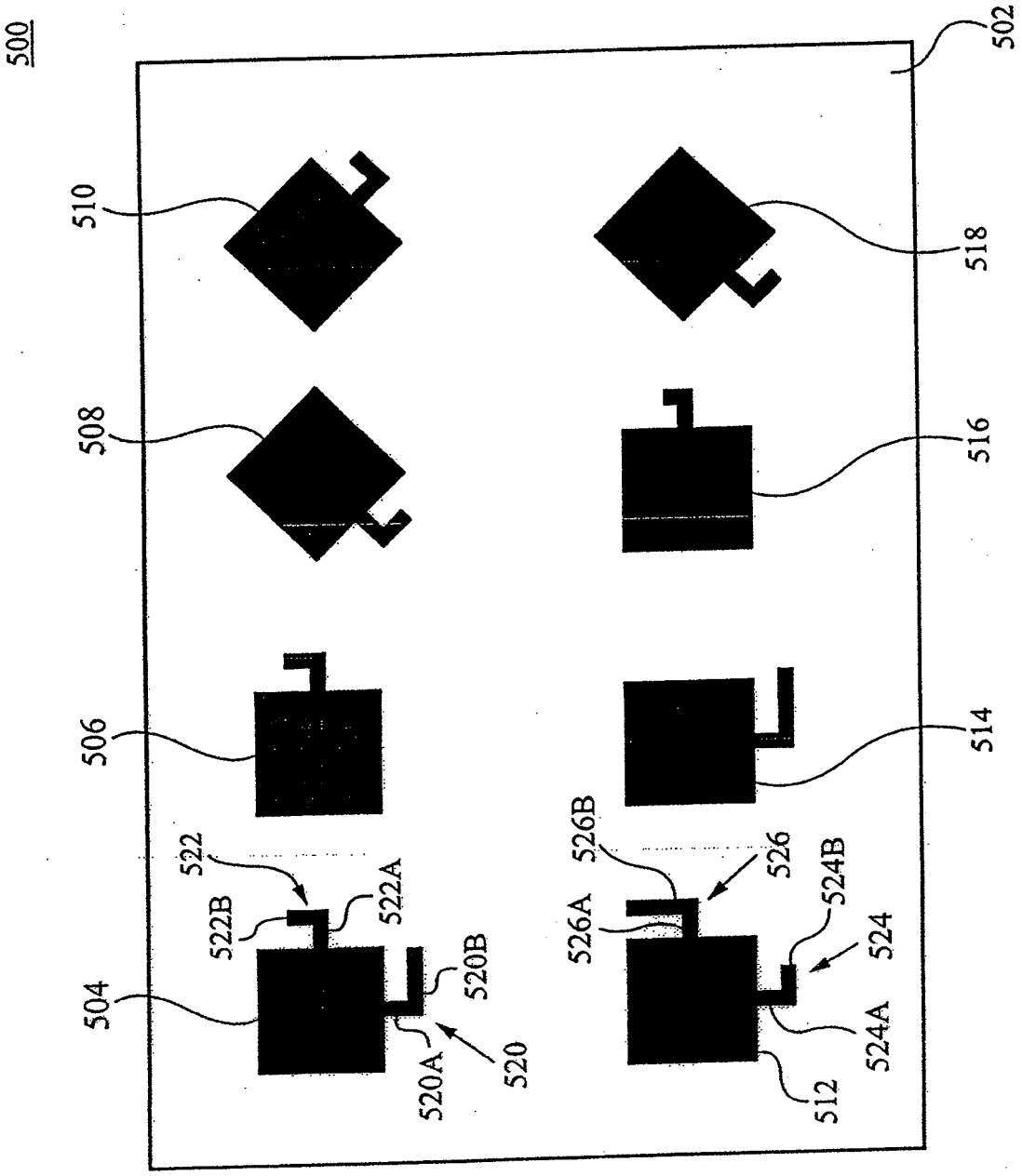
500
502
510
508
506
504
518
516
514
522
522B
522A
520B
520A
520
526B
526
526A
524B
524
524A
512

Fig. 4B

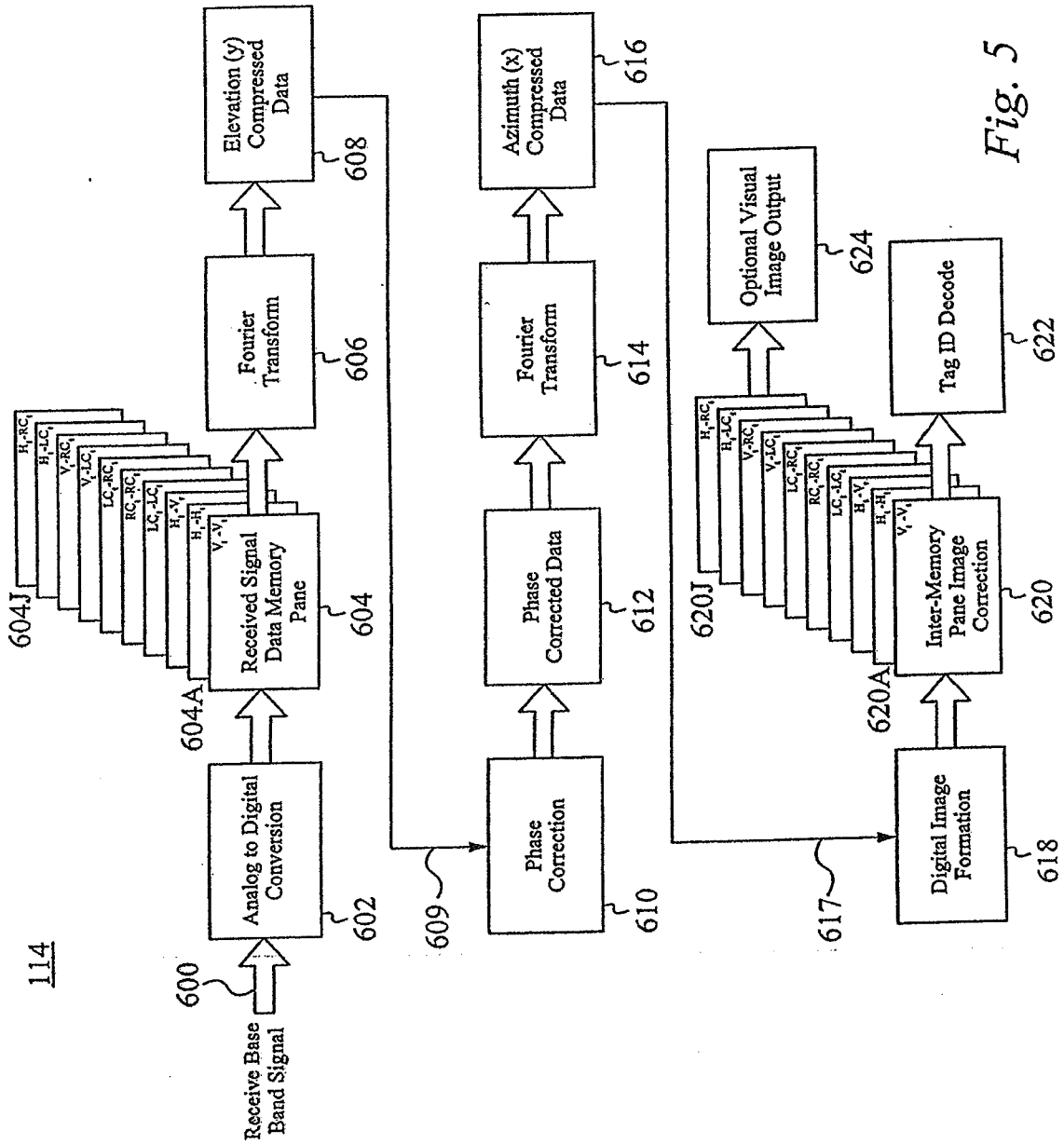
114
600
Receive Base Band Signal
Analog to Digital Conversion
602
604A
604J
Received Signal Data Memory Pane
604
Fourier Transform
606
Elevation (y) Compressed Data
608
609
Phase Correction
610
Phase Corrected Data
612
Fourier Transform
614
Azimuth (x) Compressed Data
616
617
Digital Image Formation
618
620A
620J
Inter-Memory Pane Image Correction
620
Tag ID Decode
622
Optional Visual Image Output
624

Fig. 5

Polarization (degrees)	Phase (degrees)	Binary Code (bits)
0	0	0000
0	+90	0001
0	-90	0010
0	180	0011
45	0	0100
45	+90	0101
45	-90	0110
45	180	0111
90	0	1000
90	+90	1001
90	-90	1010
90	180	1011
135	0	1100
135	+90	1101
135	-90	1110
135	180	1111

Fig. 6

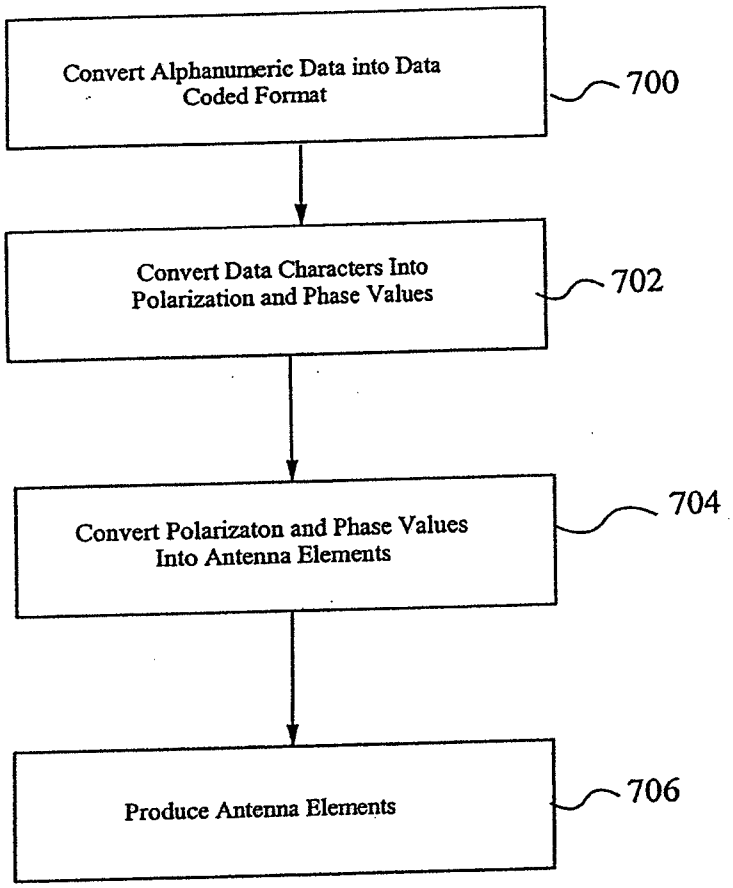
Convert Alphanumeric Data into Data Coded Format
700
Convert Data Characters Into Polarization and Phase Values
702
Convert Polarizaton and Phase Values Into Antenna Elements
704
Produce Antenna Elements
706

Fig. 7