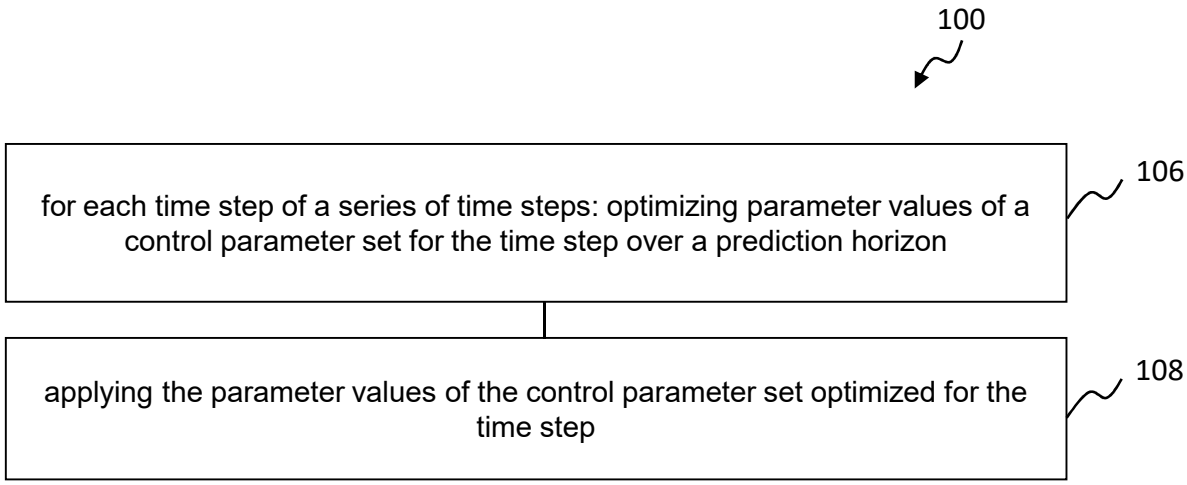
100
for each time step of a series of time steps: optimizing parameter values of a control parameter set for the time step over a prediction horizon
106
applying the parameter values of the control parameter set optimized for the time step
108

FIG. 1

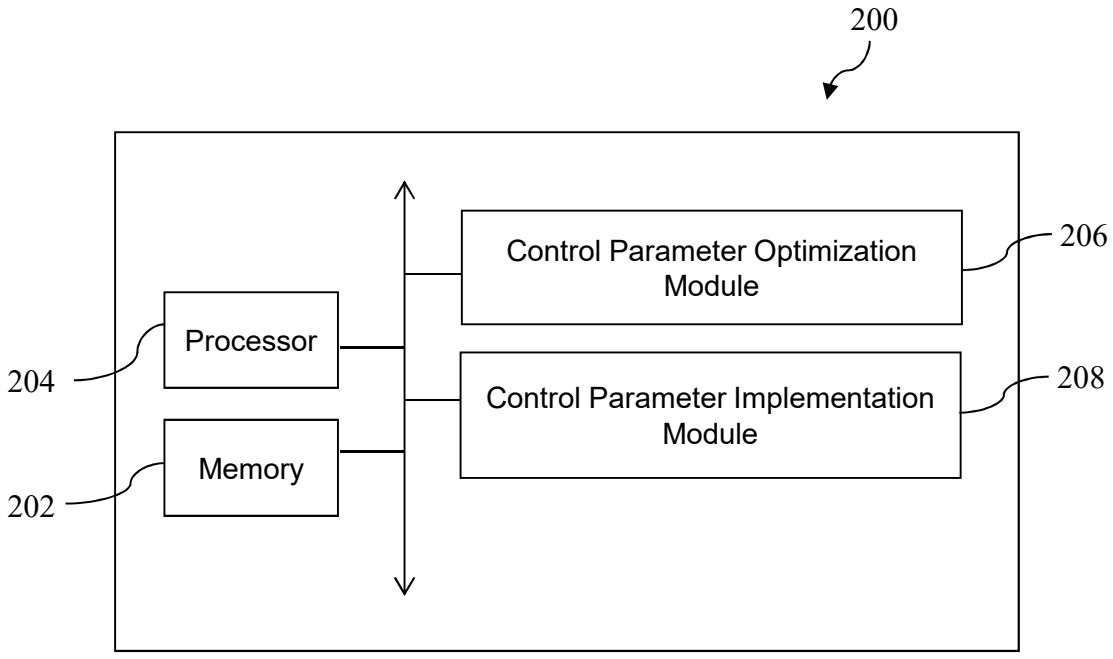
200
Control Parameter Optimization Module
206
Processor
204
Control Parameter Implementation Module
208
Memory
202

FIG. 2

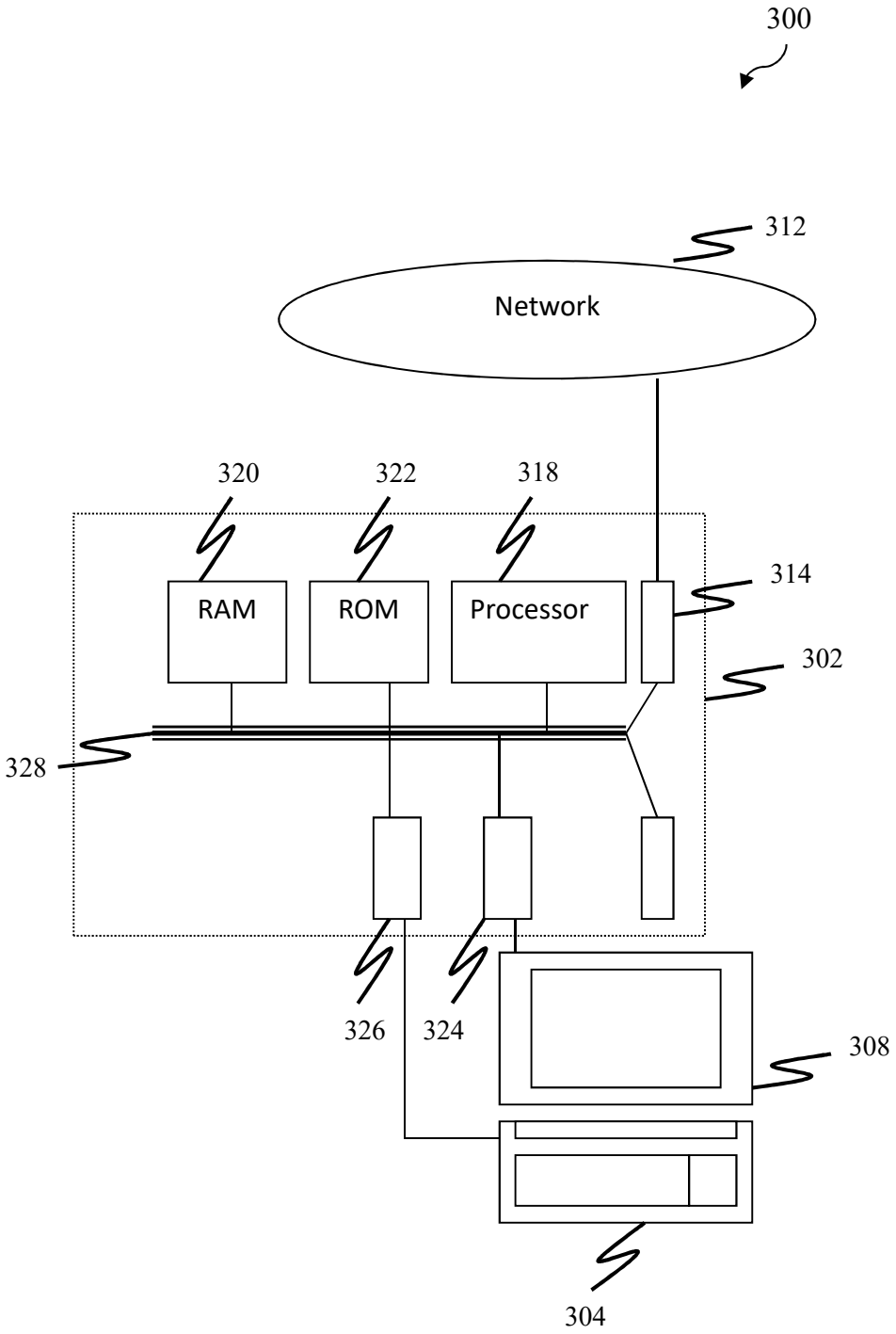
300
312
Network
320
322
318
RAM
ROM
Processor
314
302
328
326
324
308
304

FIG. 3

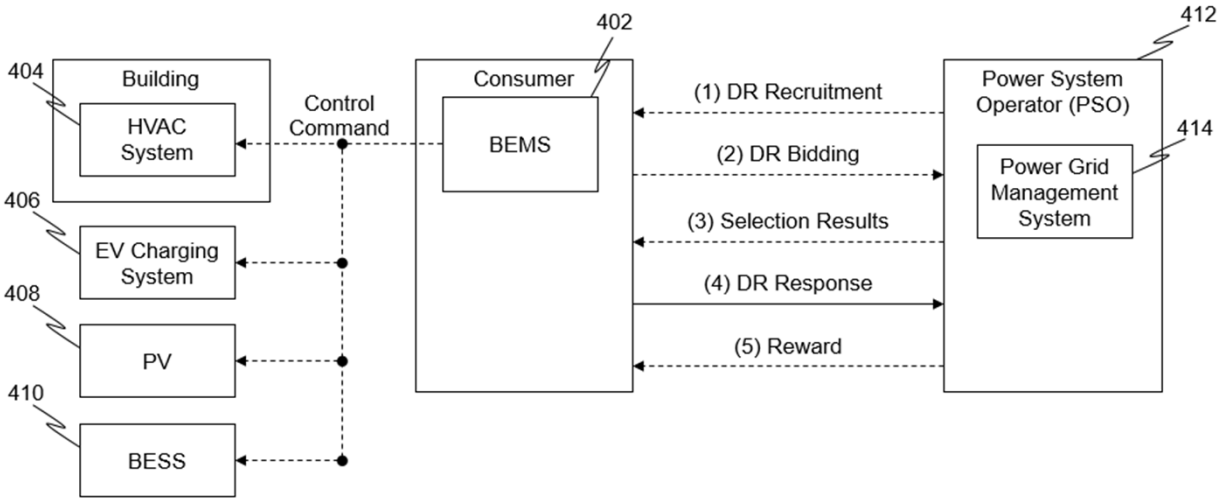
402
412
404
Building
HVAC System
Control Command
Consumer
BEMS
(1) DR Recruitment
Power System Operator (PSO)
414
(2) DR Bidding
Power Grid Management System
406
EV Charging System
(3) Selection Results
408
PV
(4) DR Response
410
BESS
(5) Reward

FIG. 4

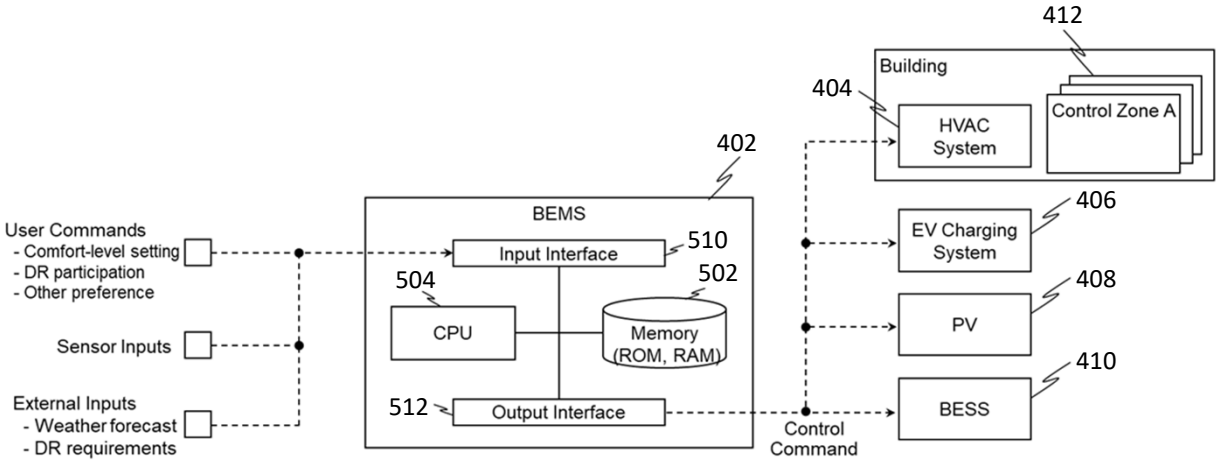
412
Building
404
HVAC System
Control Zone A
402
BEMS
User Commands
- Comfort-level setting
- DR participation
- Other preference
Input Interface
510
504
502
CPU
Memory (ROM, RAM)
Sensor Inputs
External Inputs
- Weather forecast
- DR requirements
512
Output Interface
Control Command
406
EV Charging System
408
PV
410
BESS

FIG. 5

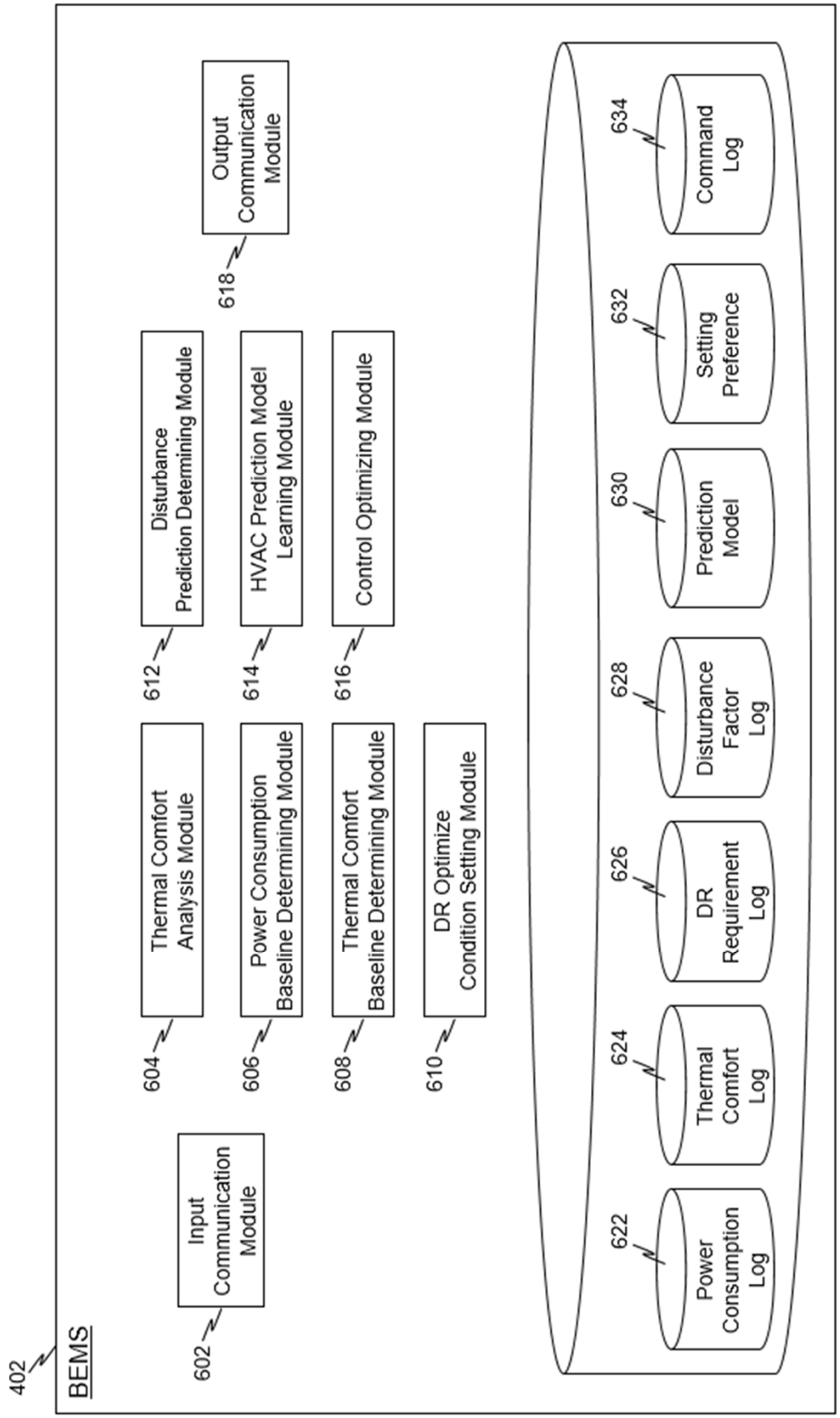
402
BEMS
602
Input Communication Module
604
Thermal Comfort Analysis Module
606
Power Consumption Baseline Determining Module
608
Thermal Comfort Baseline Determining Module
610
DR Optimize Condition Setting Module
612
Disturbance Prediction Determining Module
614
HVAC Prediction Model Learning Module
616
Control Optimizing Module
618
Output Communication Module
622
Power Consumption Log
624
Thermal Comfort Log
626
DR Requirement Log
628
Disturbance Factor Log
630
Prediction Model
632
Setting Preference
634
Command Log

FIG. 6

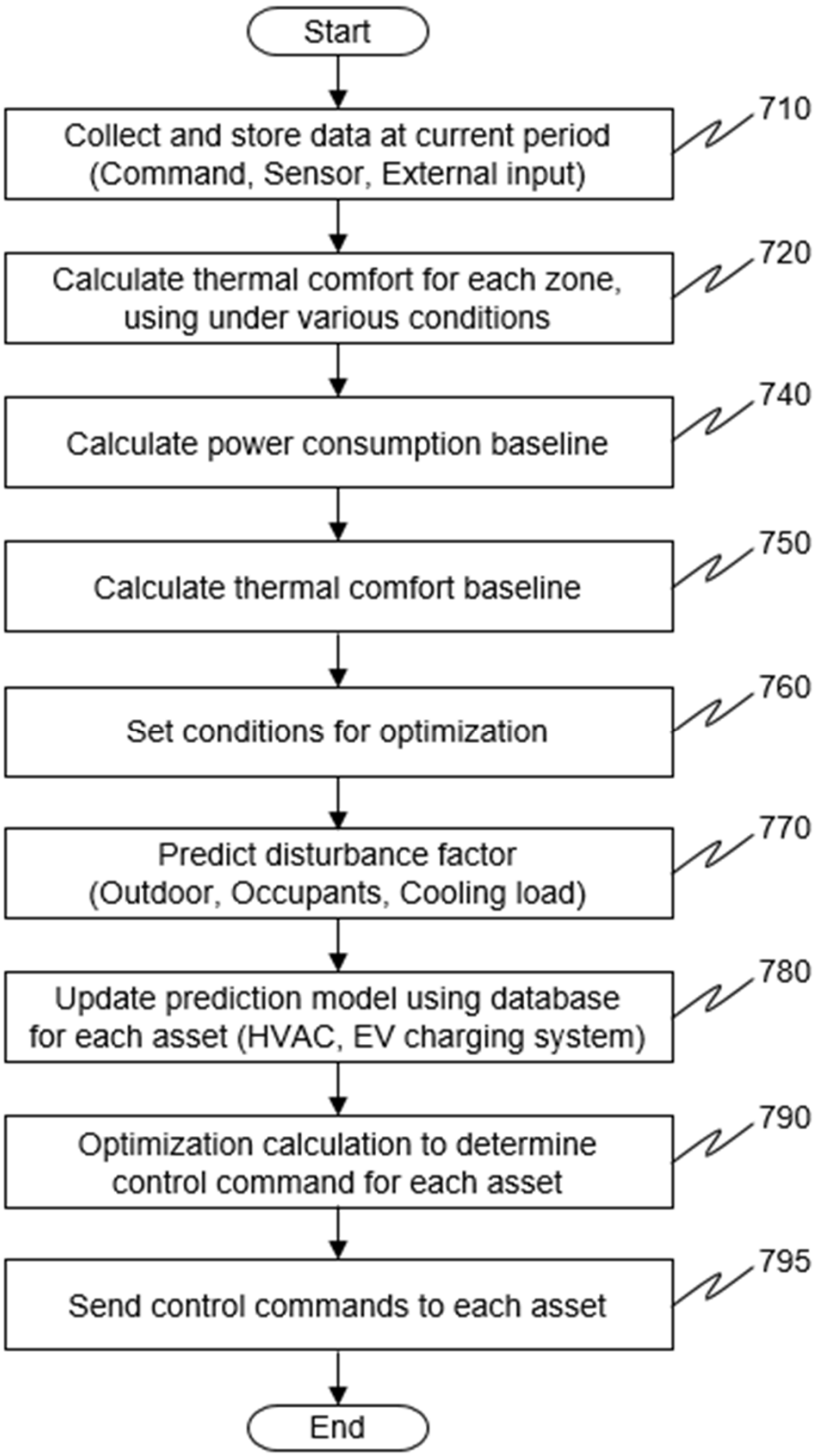
Start
Collect and store data at current period (Command, Sensor, External input)
710
Calculate thermal comfort for each zone, using under various conditions
720
Calculate power consumption baseline
740
Calculate thermal comfort baseline
750
Set conditions for optimization
760
Predict disturbance factor (Outdoor, Occupants, Cooling load)
770
Update prediction model using database for each asset (HVAC, EV charging system)
780
Optimization calculation to determine control command for each asset
790
Send control commands to each asset
795
End

FIG. 7

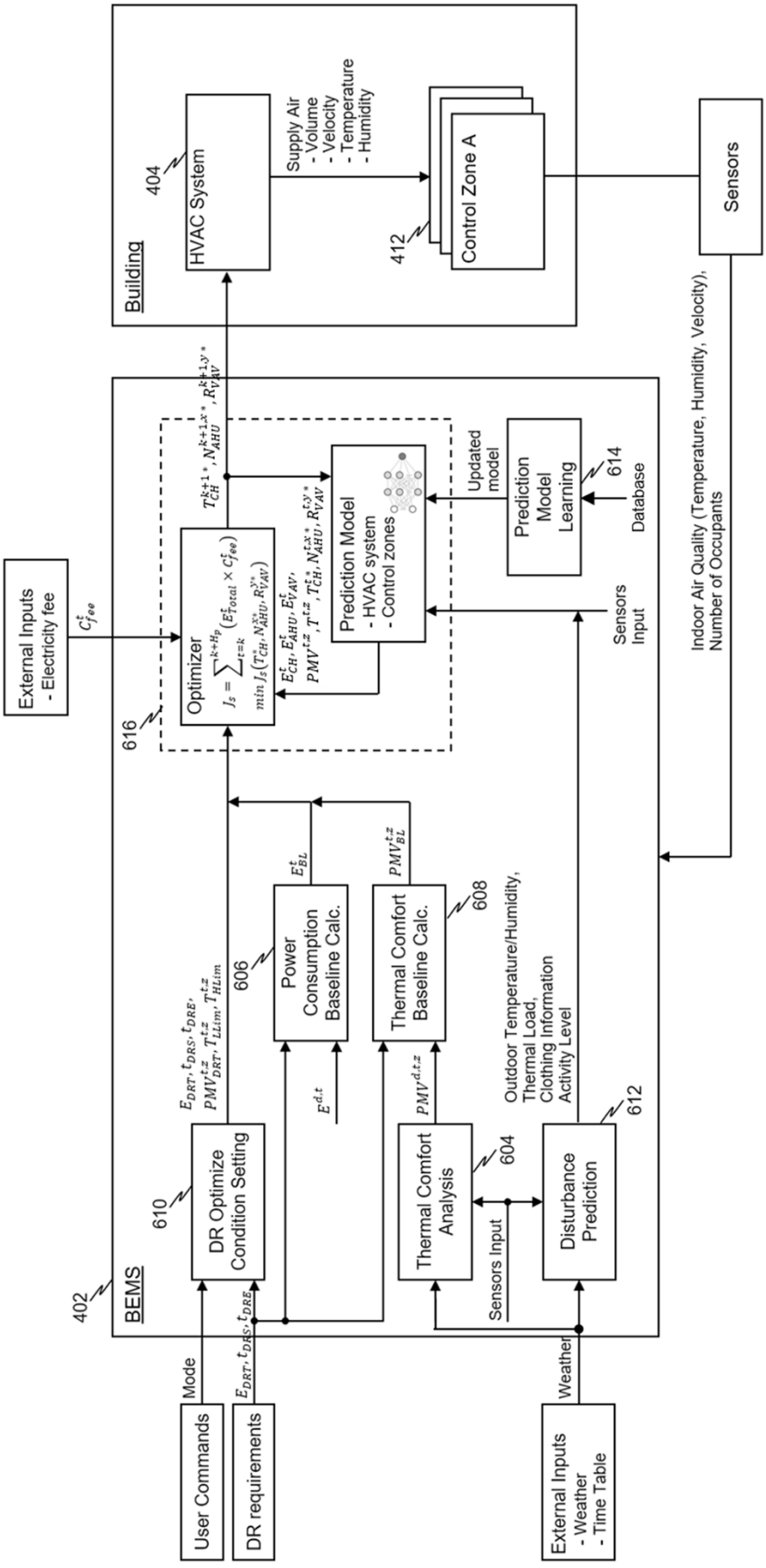

Building
HVAC System
404
Supply Air
- Volume
- Velocity
- Temperature
- Humidity
Control Zone A
412
Sensors
Indoor Air Quality (Temperature, Humidity, Velocity),
Number of Occupants
External Inputs
- Electricity fee
C^t_{fee}
Optimizer
616
$J_s = \sum_{t=k}^{k+H_p} (E^t_{Total} \times C^t_{fee})$
$\min J_s(T^*_{CH}, N^{x*}_{AHU}, R^{y*}_{VAV})$
$T^{k+1*}_{CH}, N^{k+1,x*}_{AHU}, R^{k+1,y*}_{VAV}$
$E^t_{CH}, E^t_{AHU}, E^t_{VAV}, PMV^{t,z}, T^{t,z}, T^{t*}_{CH}, N^{t,x*}_{AHU}, R^{t,y*}_{VAV}$
Prediction Model
- HVAC system
- Control zones
Updated model
Prediction Model Learning
614
Database
Sensors Input
BEMS
402
DR Optimize Condition Setting
610
$E_{DRT}, t_{DRS}, t_{DRE}, PMV^{t,z}_{DRT}, T^{t,z}_{LLim}, T^{t,z}_{HLim}$
Power Consumption Baseline Calc.
606
E^t_{BL}
Thermal Comfort Baseline Calc.
608
$PMV^{t,z}_{BL}$
$E^{d,t}$
$PMV^{d,t,z}$
Thermal Comfort Analysis
604
Sensors Input
Disturbance Prediction
612
Outdoor Temperature/Humidity,
Thermal Load,
Clothing Information
Activity Level
User Commands
Mode
DR requirements
$E_{DRT}, t_{DRS}, t_{DRE}$
External Inputs
- Weather
- Time Table
Weather

FIG. 8

624

Date	Time	Building No.	Zone No.	Zone Type	Weather	Outdoor Air Temperature	Outdoor Relative Humidity	Zone Air Temperature	Zone Relative Humidity	Wind Velocity	Clothing Insulation	Calculated Thermal Comfort	Occupants Feedback	DR
21/12/2023	14:00	A	A	Office	Cloudy	32.0 °C	80%	22.0 °C	55%	0.5 m/s	Light	-1.2	Slightly Cool	No
21/12/2023	14:15	A	A	Office	Cloudy	32.3 °C	78%	22.2 °C	54%	0.5 m/s	Light	-1.1	Slightly Cool	No
:	:	:	:	:	:	:	:	:	:	:	:	:	:	

FIG. 9