REPLACEMENT SHEET
Date : 12 APR 2004



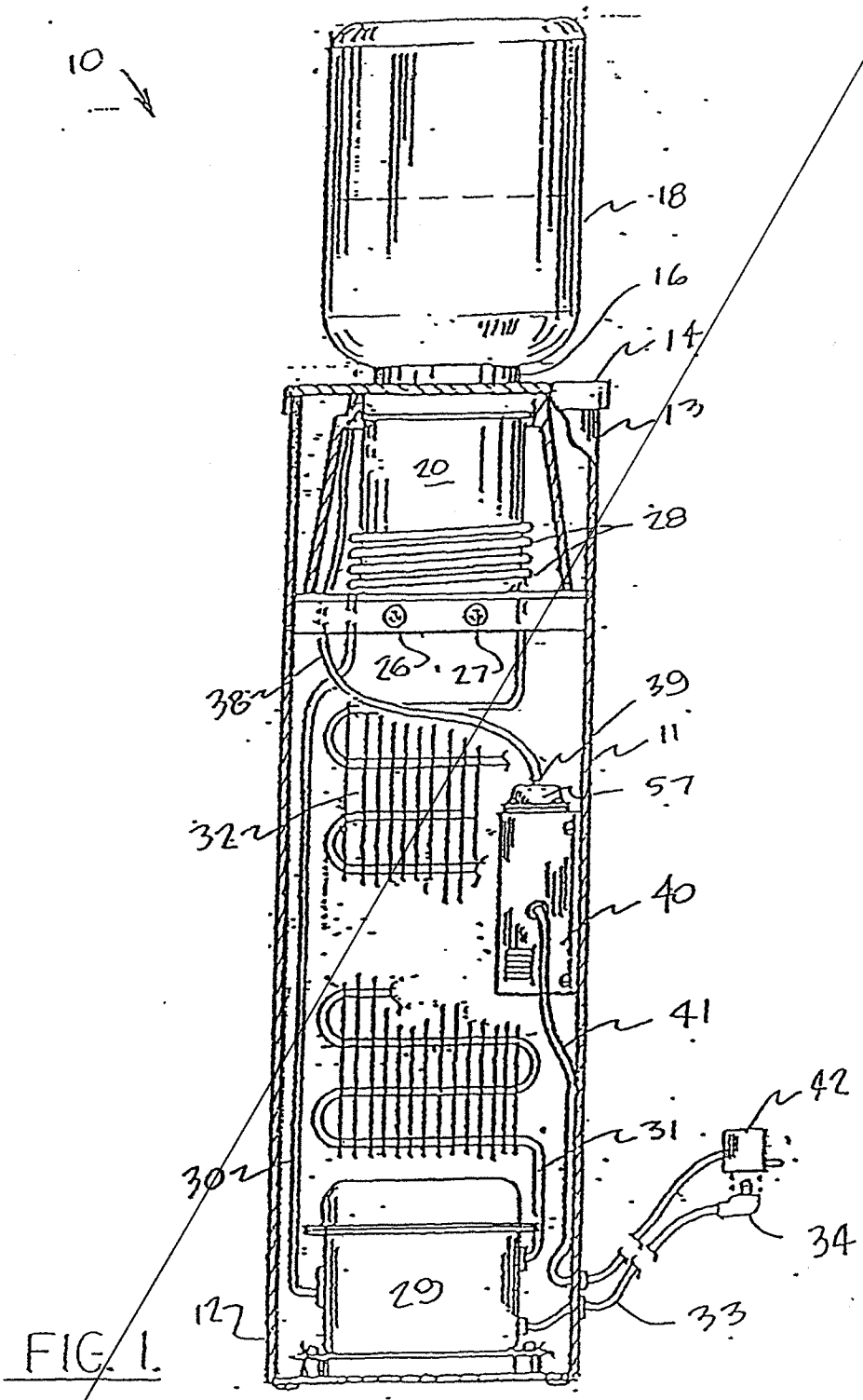


FIG. 1.

REPLACEMENT SHEET
Date : 12 APR 2004



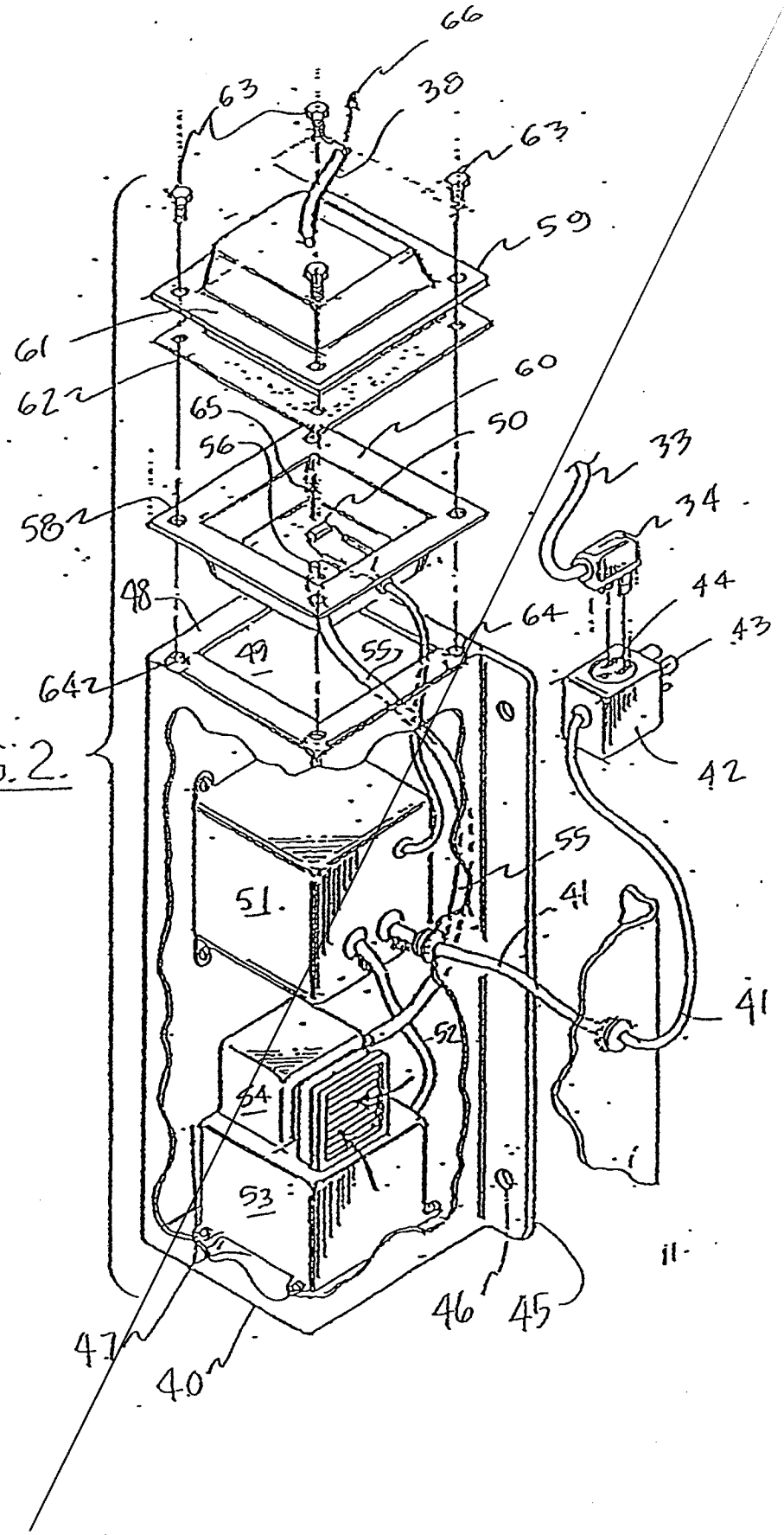


FIG. 2.

REPLACEMENT SHEET
Date : 12 APR 2004



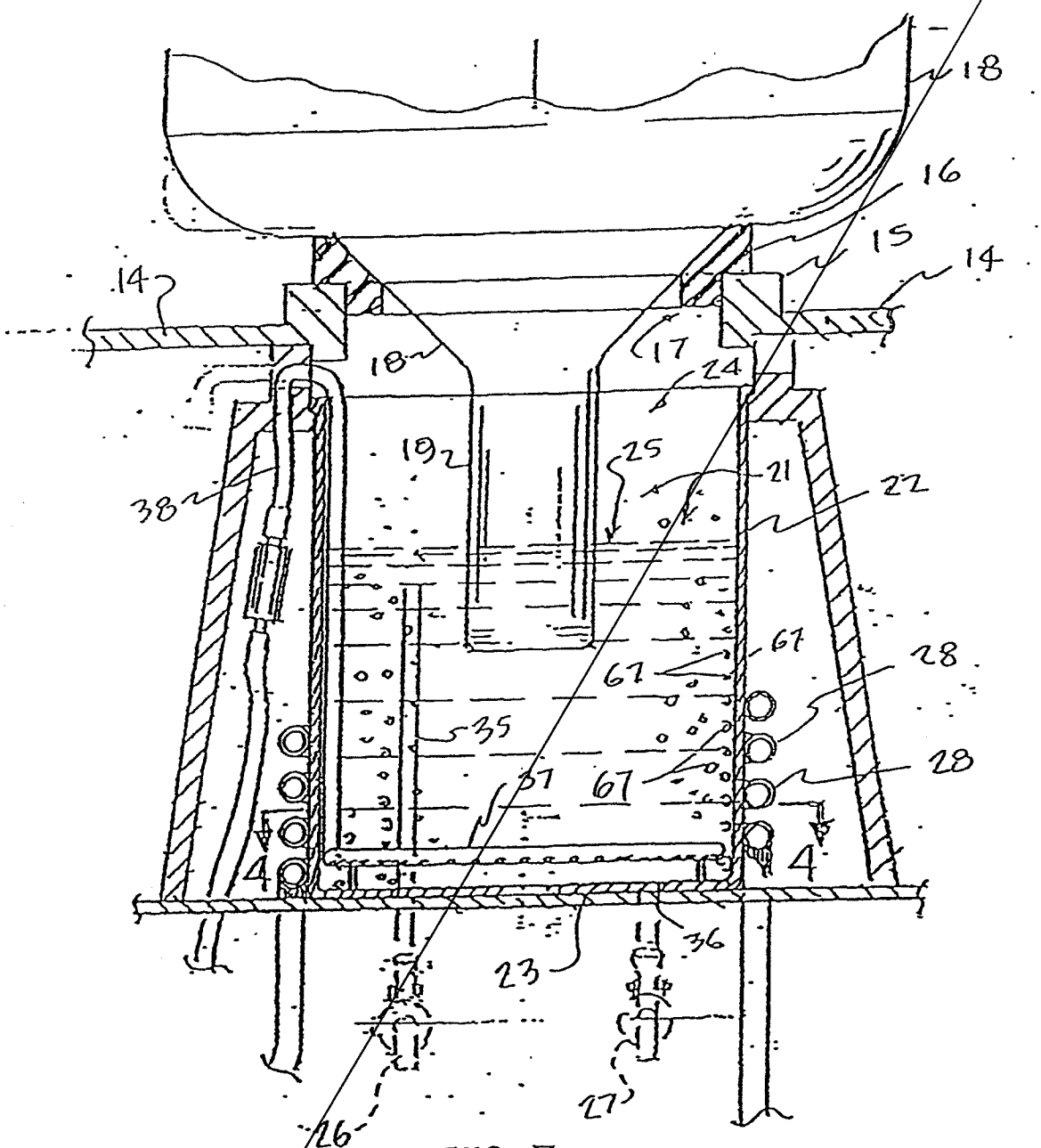


FIG. 3

REPLACEMENT SHEET
Date : 12 APR 2004



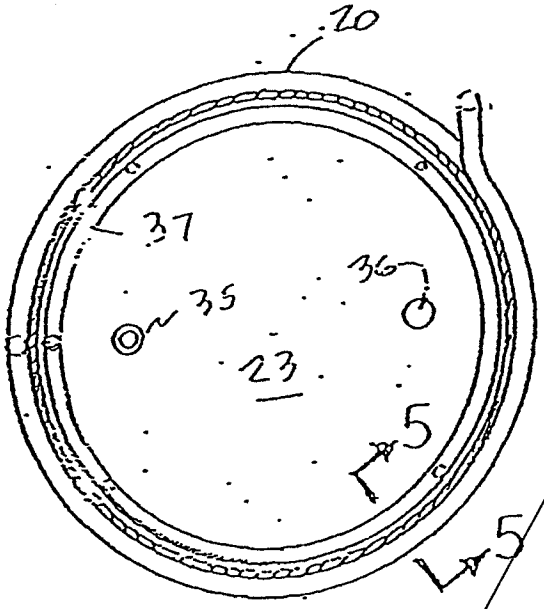


FIG. 4.

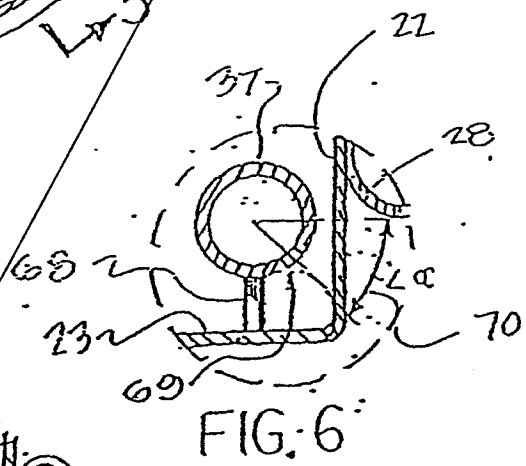


FIG. 6

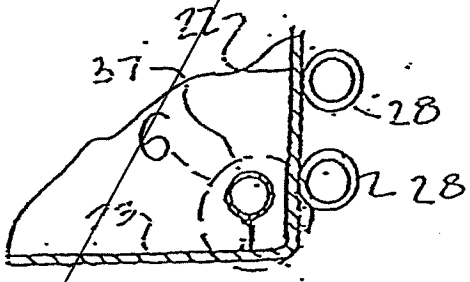


FIG. 5

REPLACEMENT SHEET
Date : 12 APR 2004

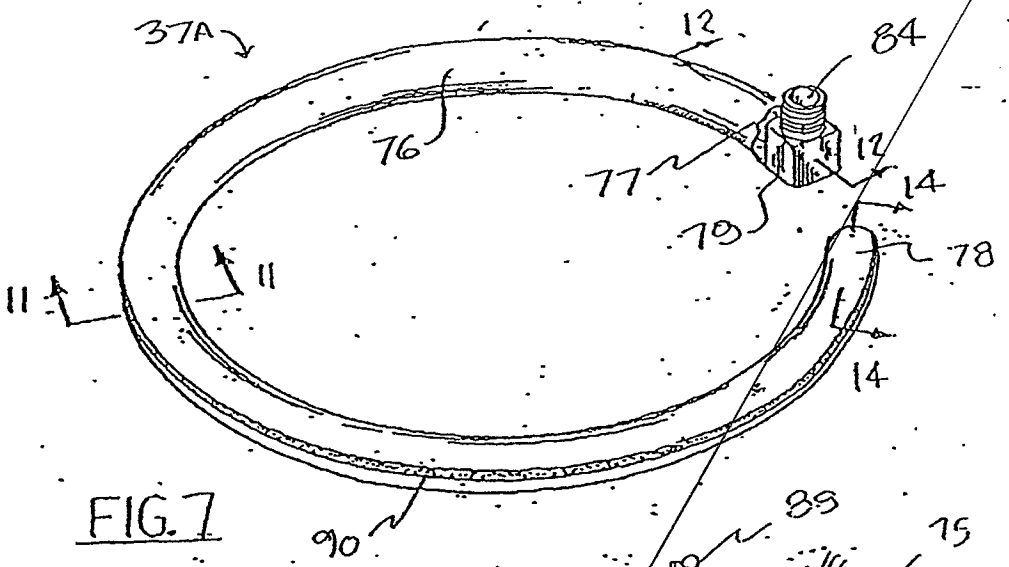


FIG. 7

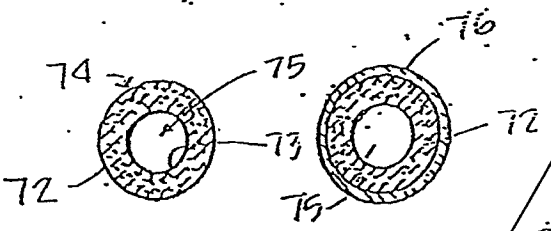


FIG. 8 FIG. 9

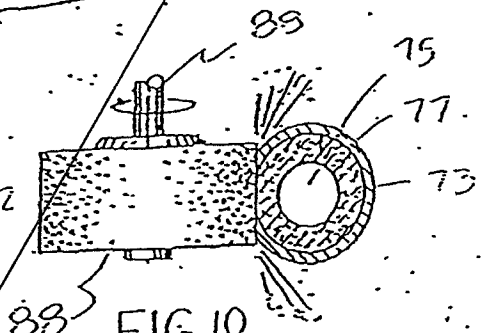


FIG 10

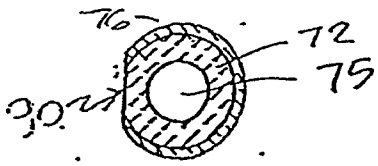


FIG. 11

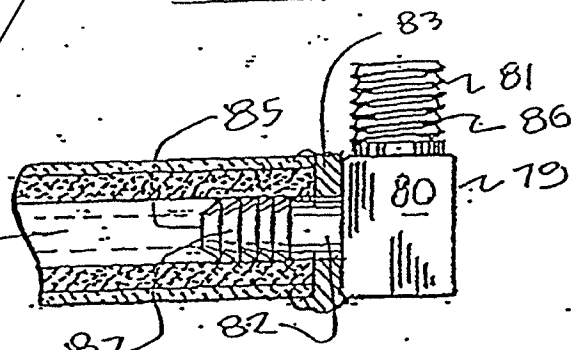


FIG. 12

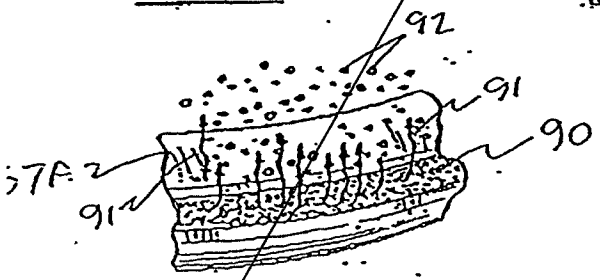


FIG. 13

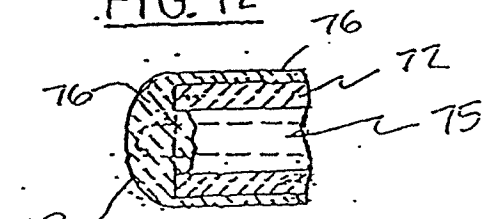


FIG. 14

REPLACEMENT SHEET
Date : 12 APR 2004



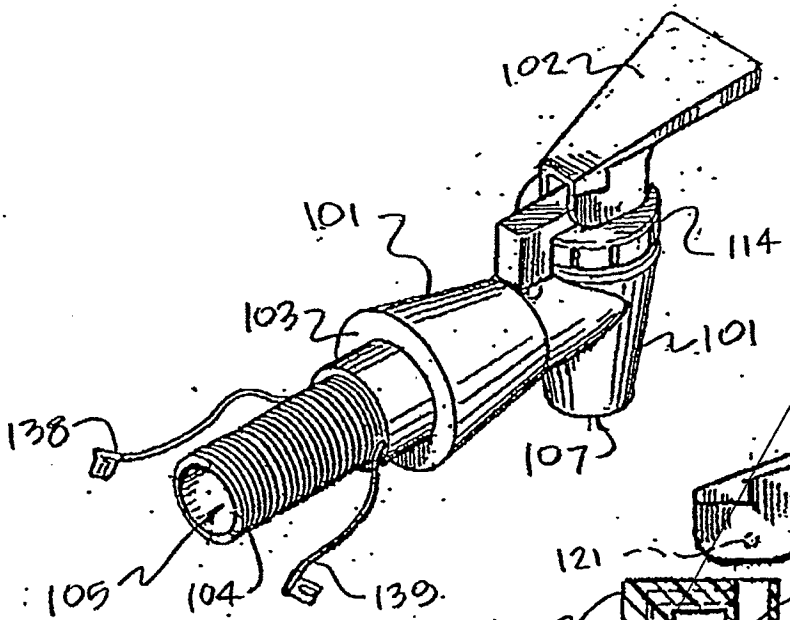


FIG. 15

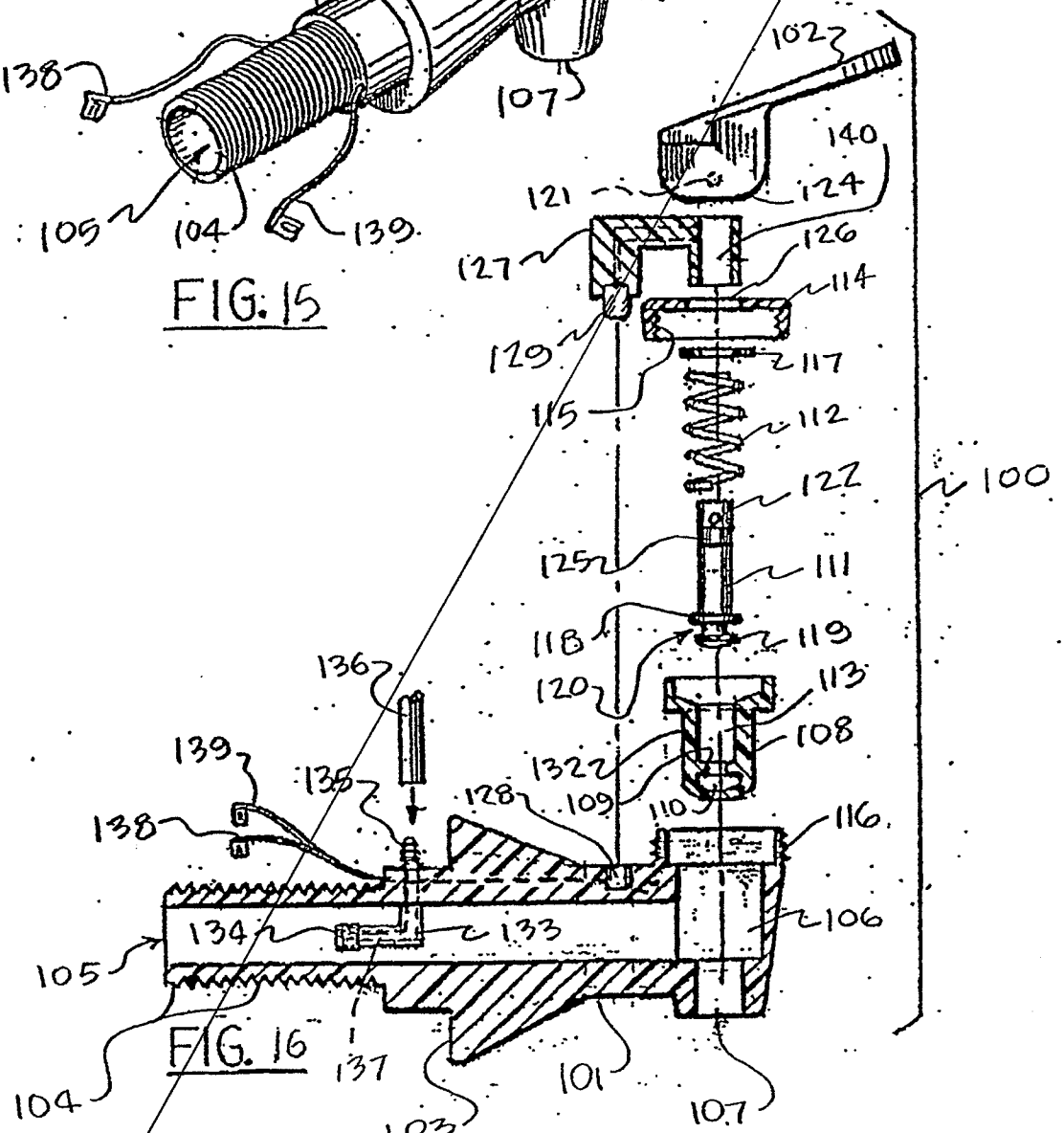


FIG. 16

REPLACEMENT SHEET
Date : 12 APR 2004

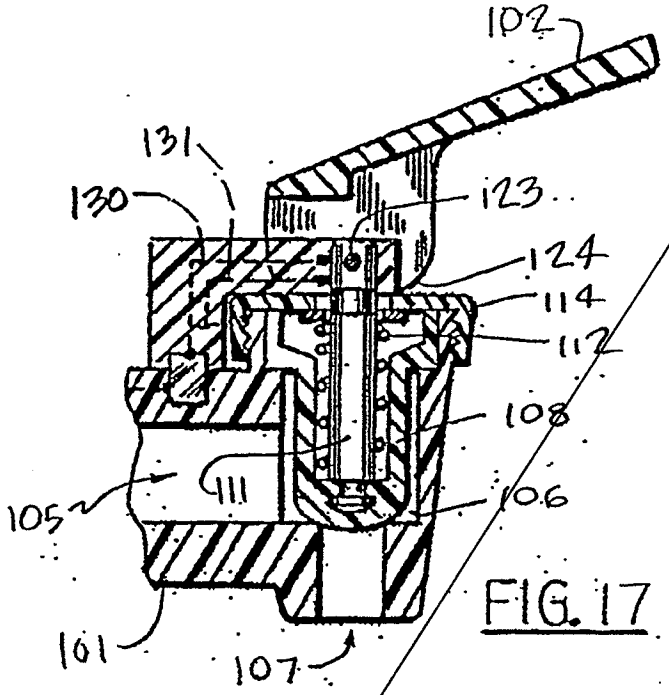


FIG. 17

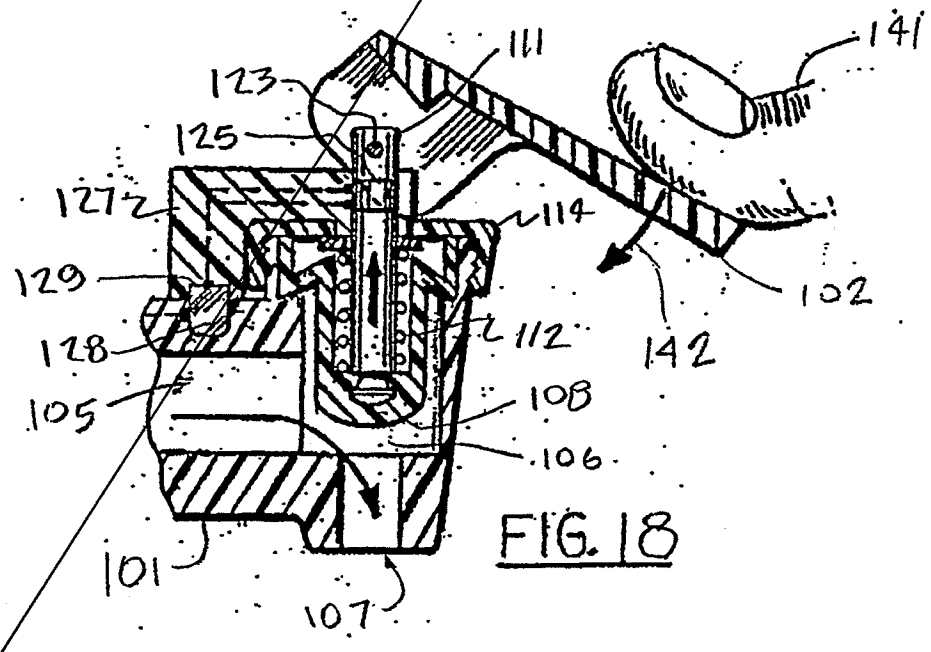


FIG. 18

REPLACEMENT SHEET
12 APR 2004
Date :.....



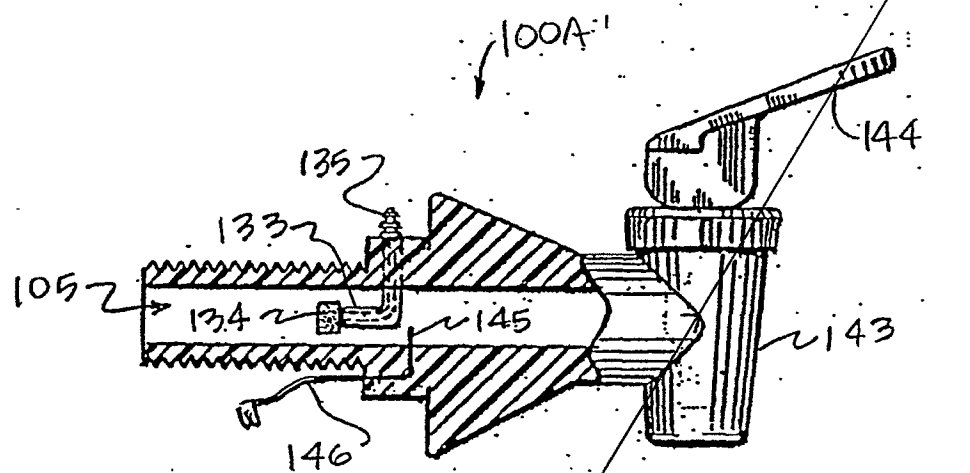


FIG. 19

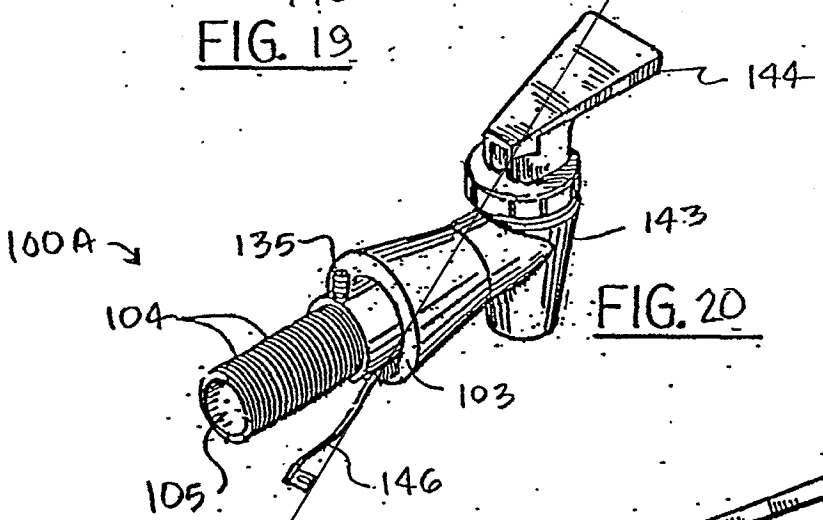


FIG. 20

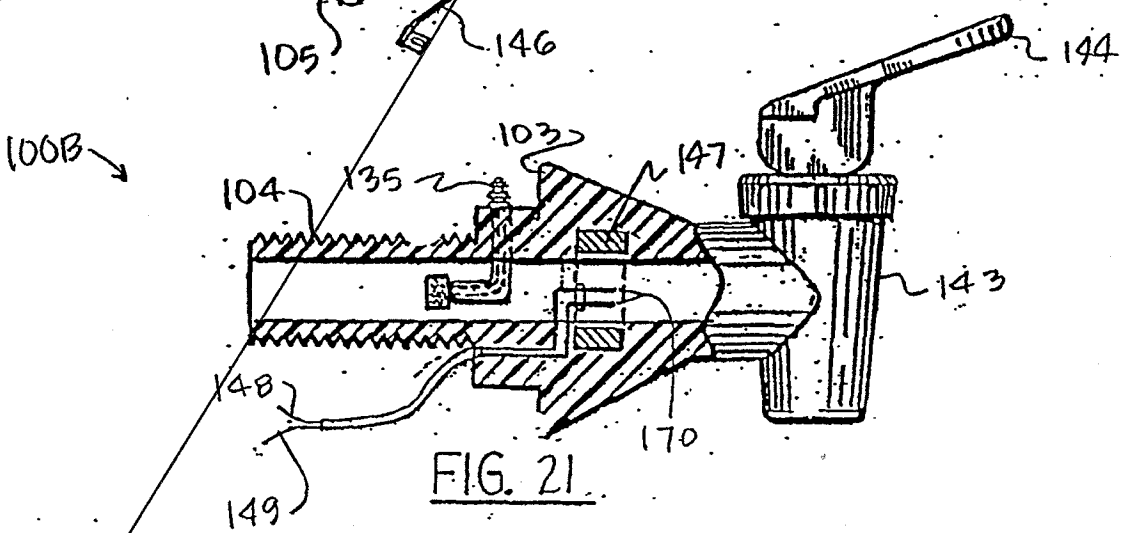


FIG. 21

REPLACEMENT SHEET
Date : 12 APR 2004



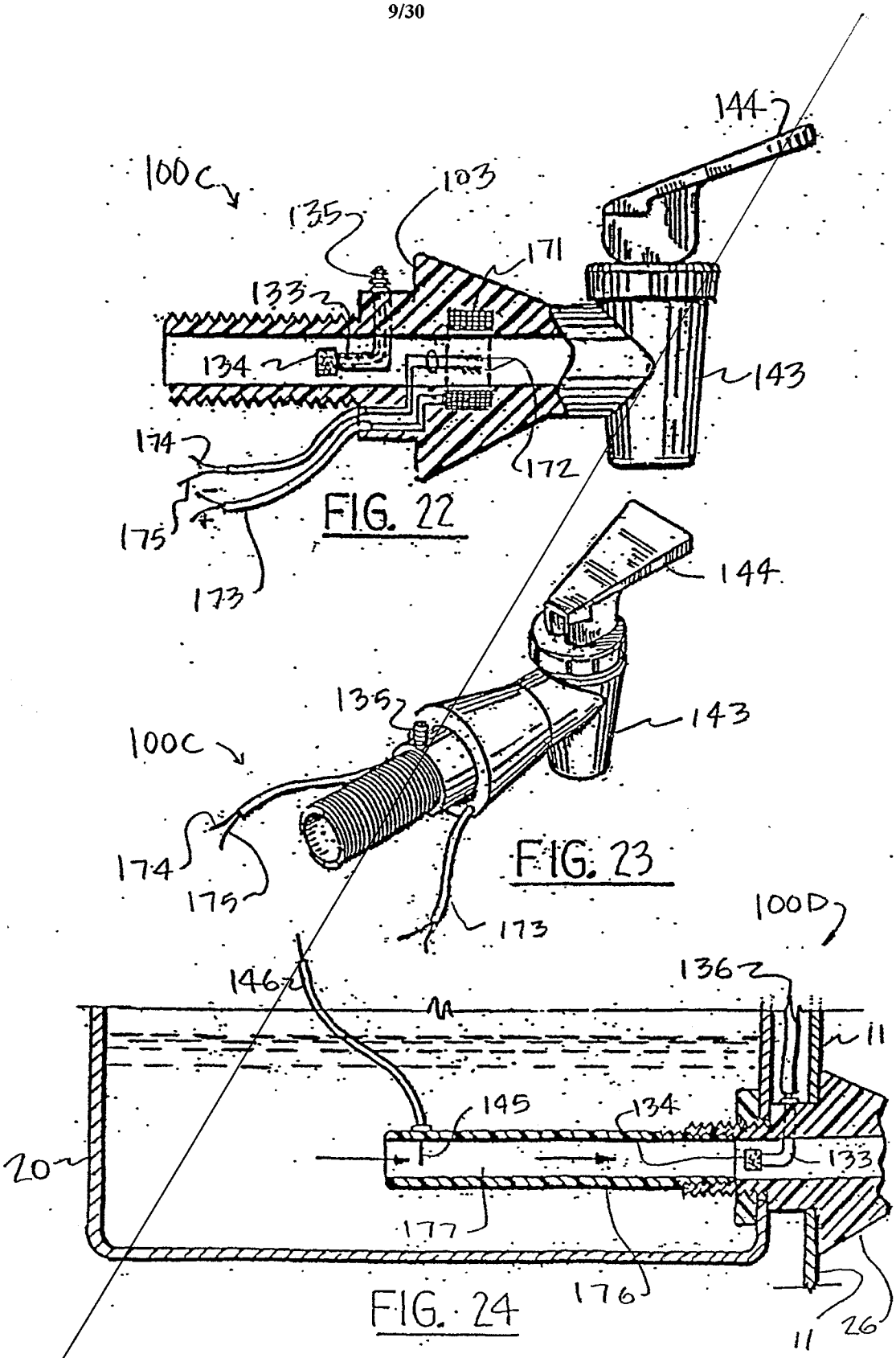


FIG. 22




FIG. 23




FIG. 24

REPLACEMENT SHEET
Date : 12 APR 2004



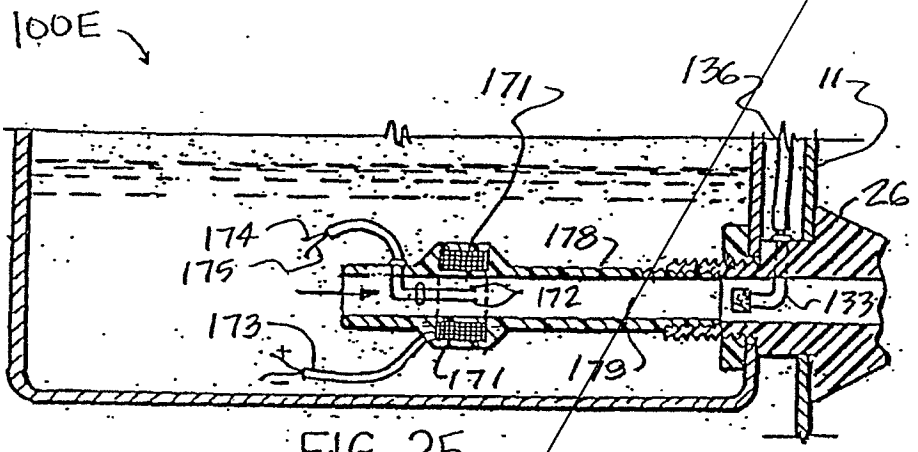


FIG. 25

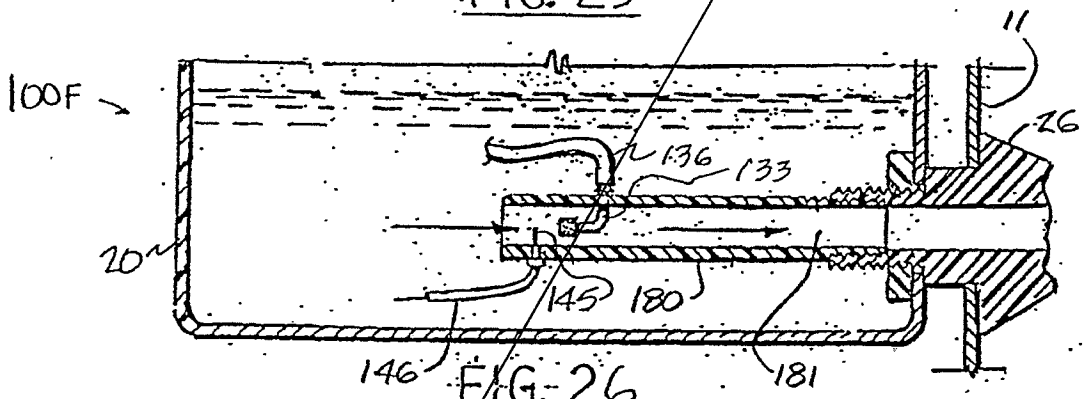


FIG. 26

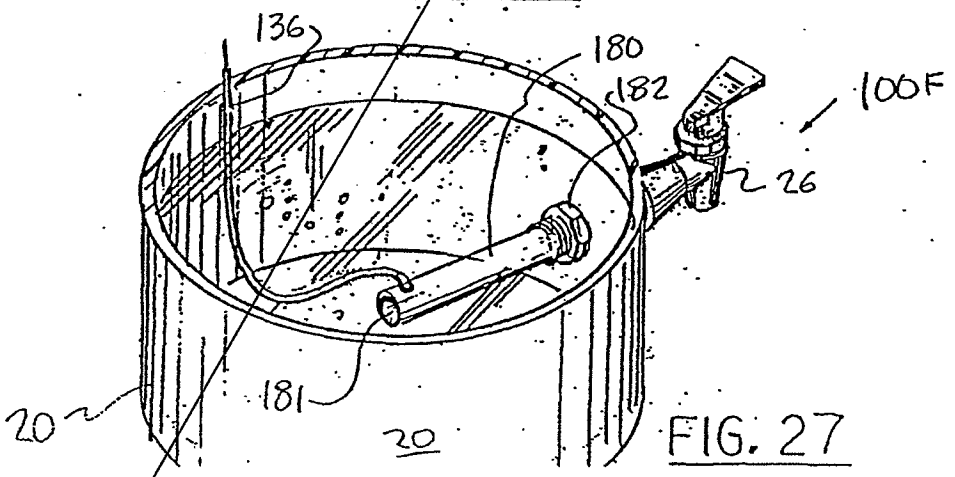


FIG. 27

REPLACEMENT SHEET
Date : 12 APR 2004



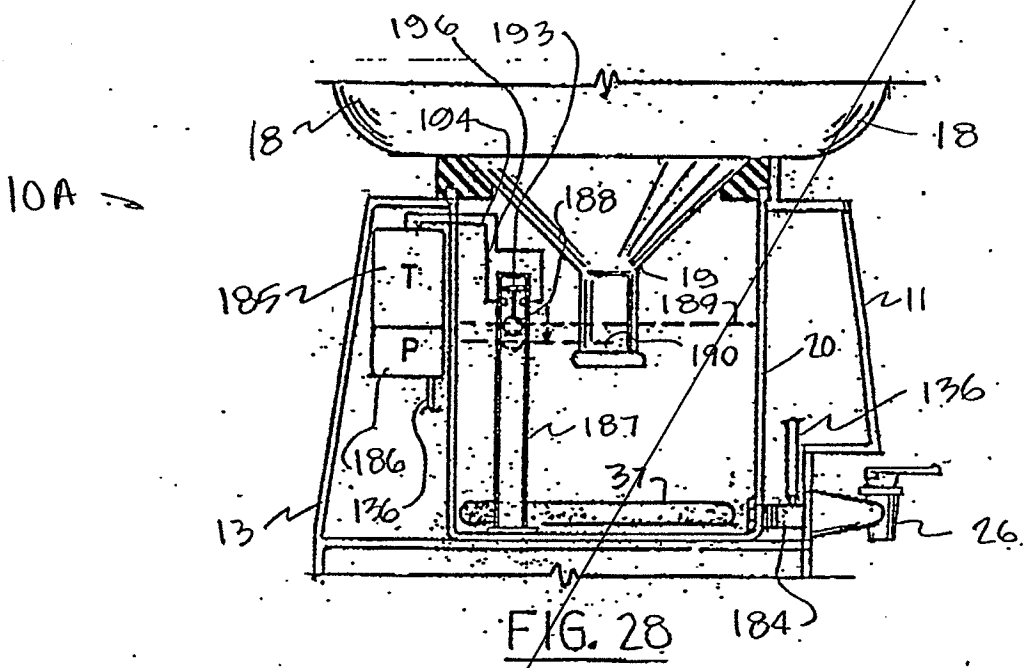


FIG. 28

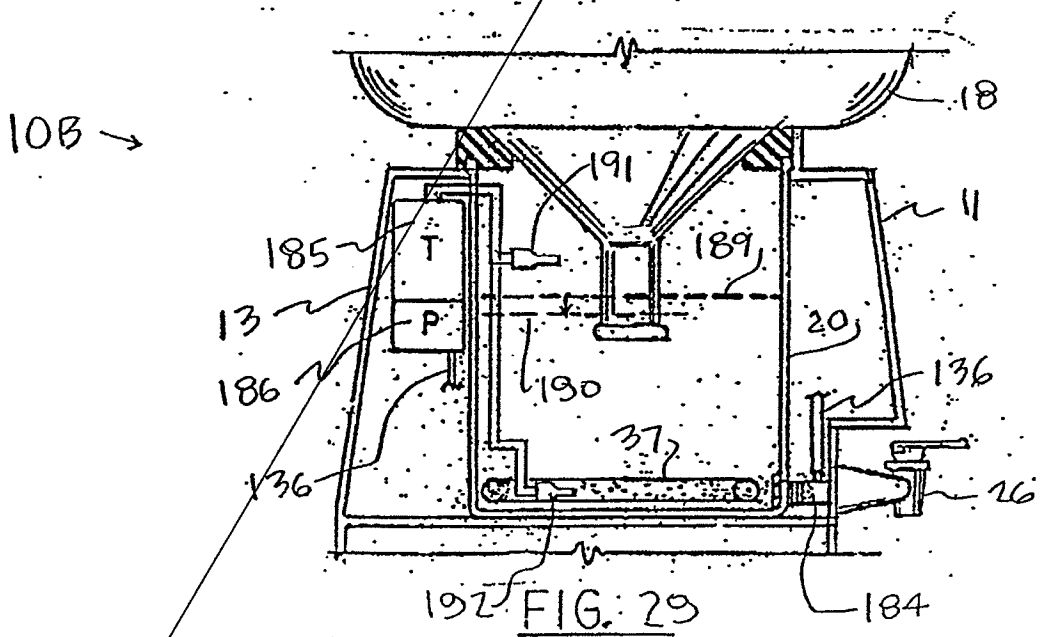


FIG. 29

REPLACEMENT SHEET
Date: 12 APR 2004



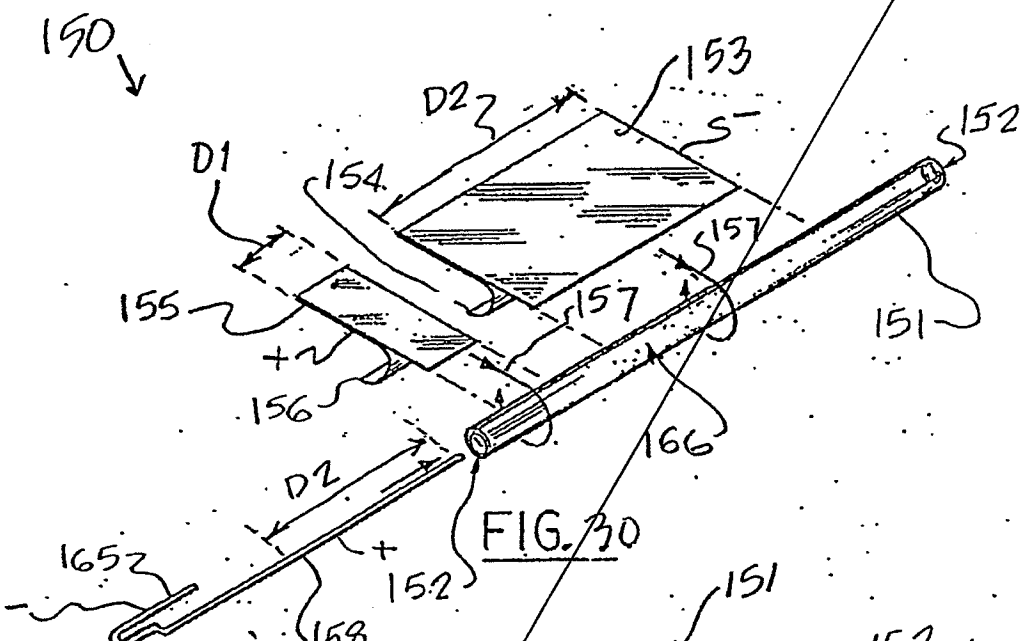


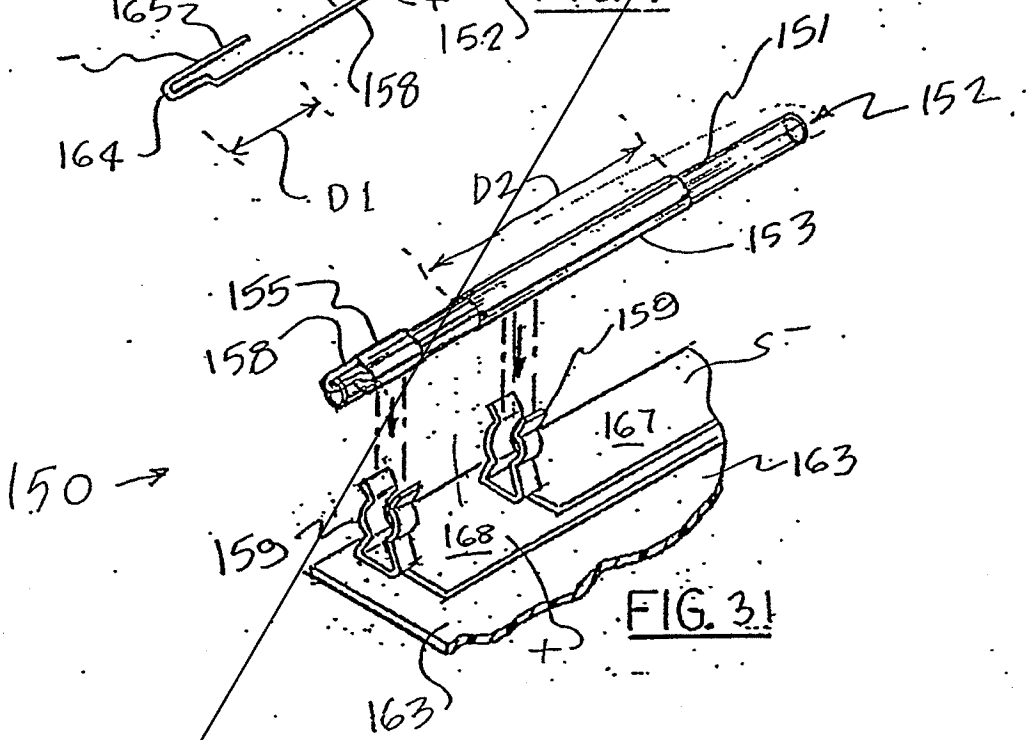

REPLACEMENT SHEET
Date : 12 APR 2004



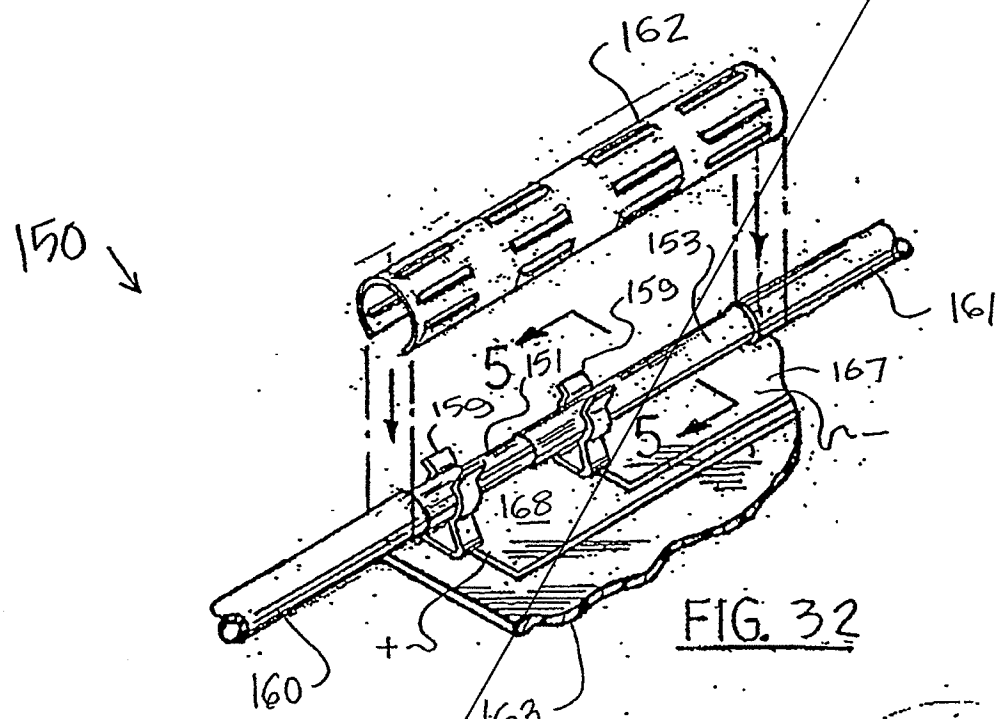


FIG. 32

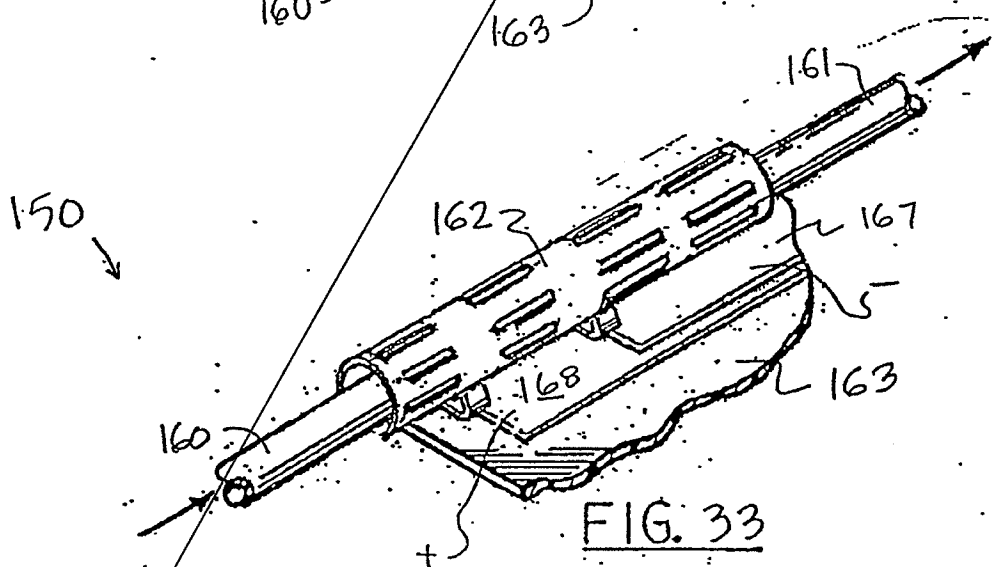


FIG. 33

REPLACEMENT SHEET
Date : 12 APR 2004



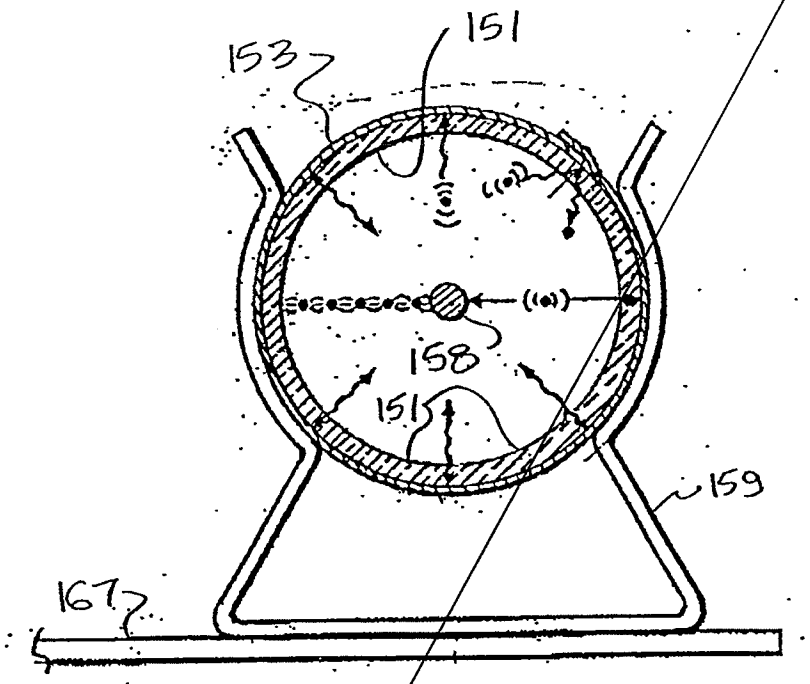


FIG. 34

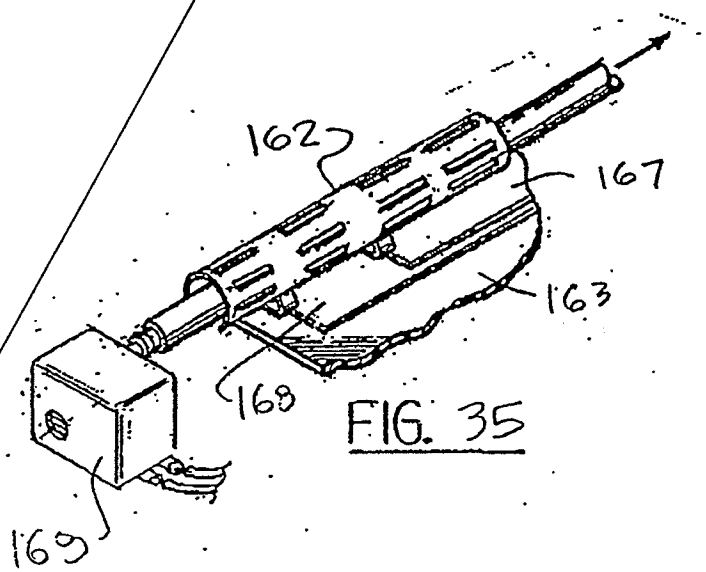


FIG. 35

REPLACEMENT SHEET
Date : 12 APR 2004

third

Circular

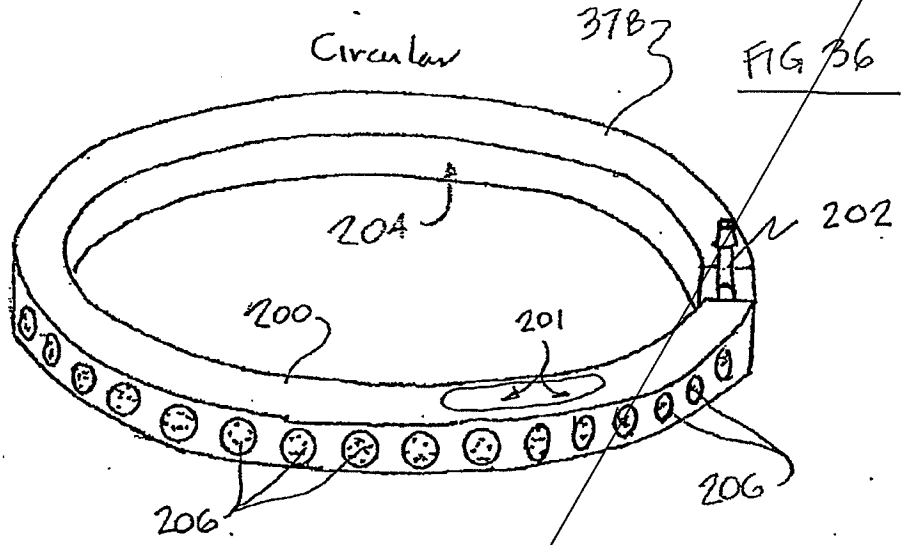


FIG 36

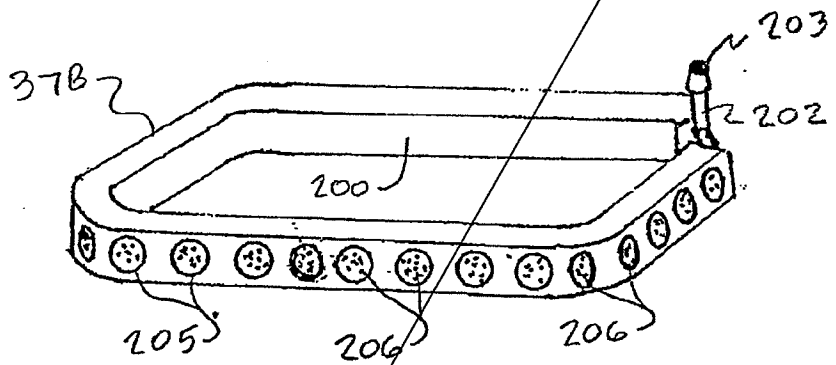


FIG 37

1

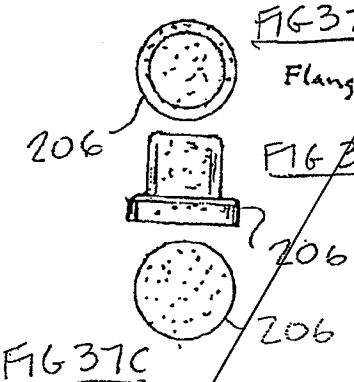


FIG 37A
Flanged
FIG 37B
FIG 37C

2.

Flanged, Transverse radiused back

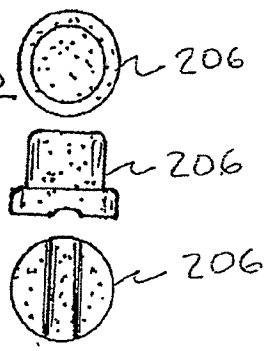


FIG 37D
FIG 37E
FIGURE 37F

REPLACEMENT SHEET
Date : 12 APR 2004



Extrusion Molding Method

1) 2 Piece Molding

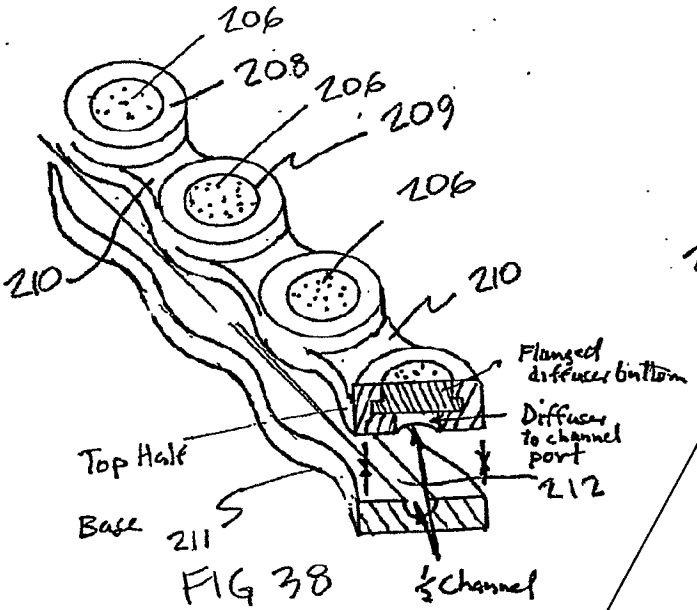


FIG 38

2) Single Piece Molding

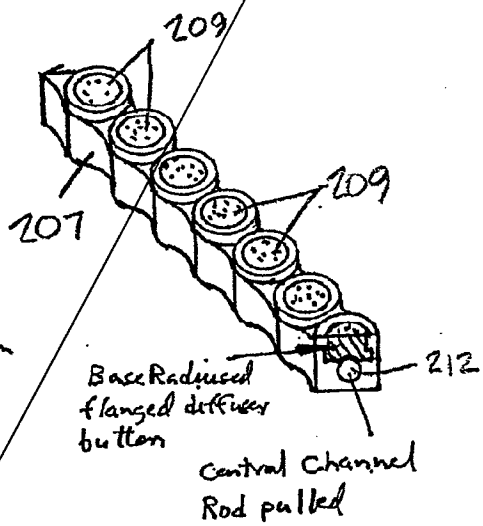


FIG 39

Connections (Assembly)

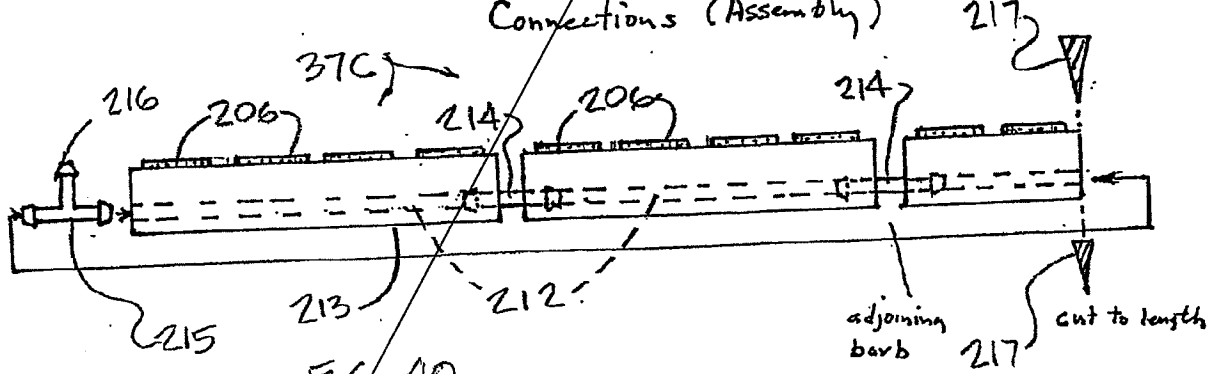


FIG 40

JJS
2/20/02

REPLACEMENT SHEET
Date : 12 APR 2004



1) Tubular Membrane ~~Diffuser~~ Ring
Small Diameter Tubing Design

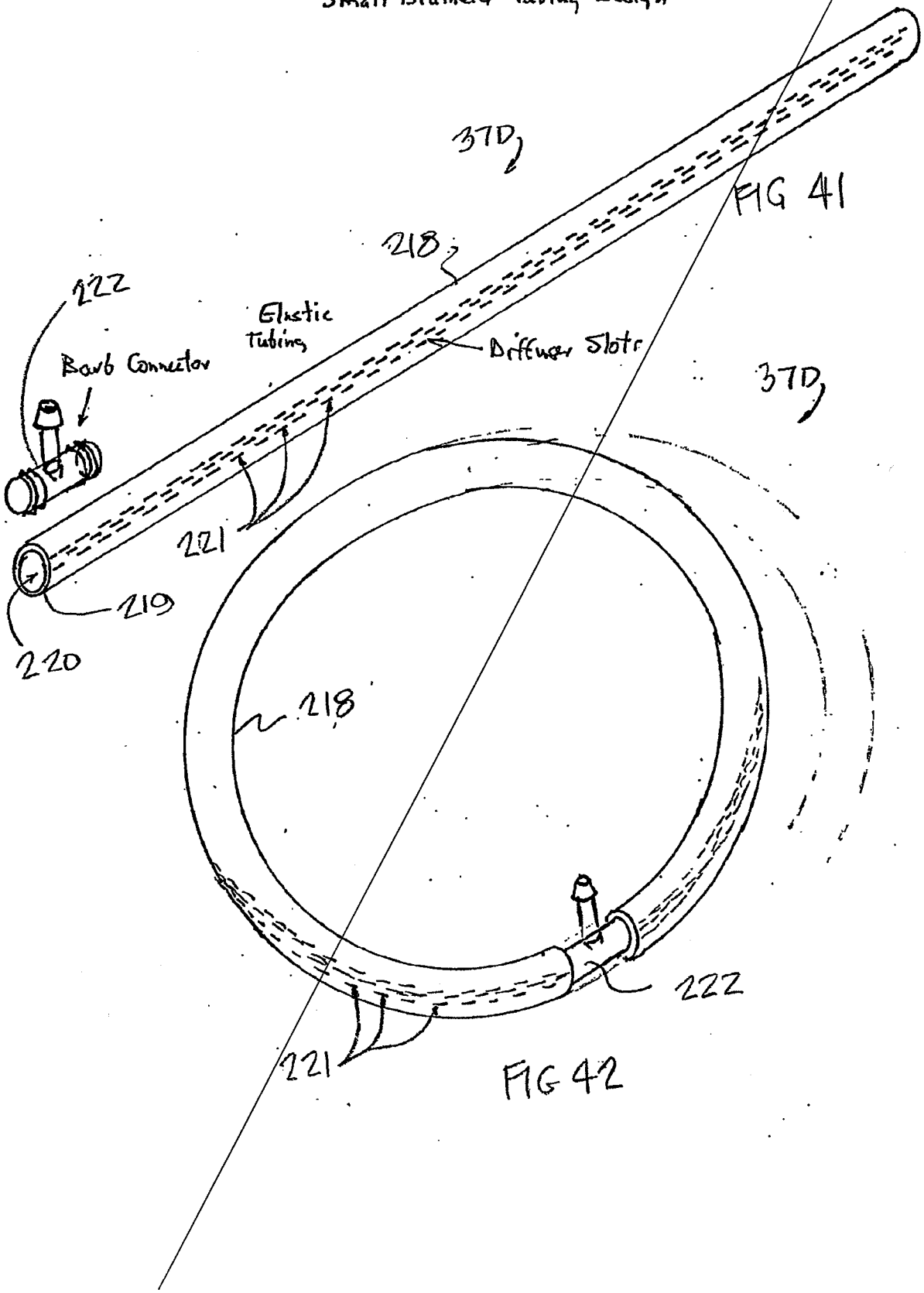


FIG 41

FIG 42

REPLACEMENT SHEET
Date : 12 APR 2004



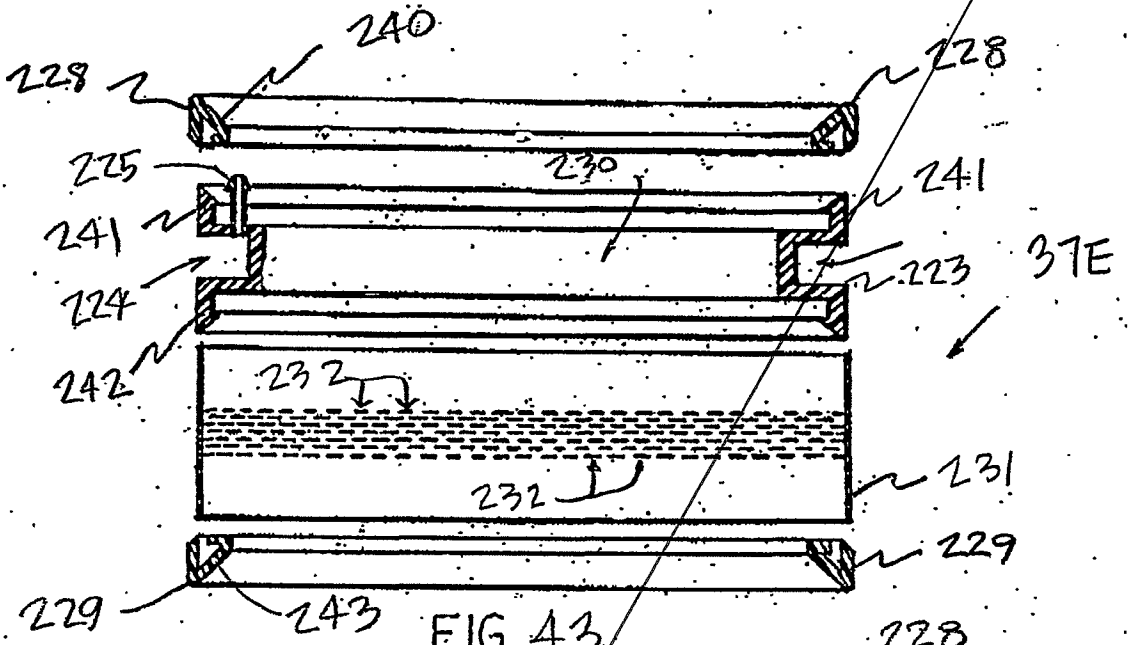


FIG. 43

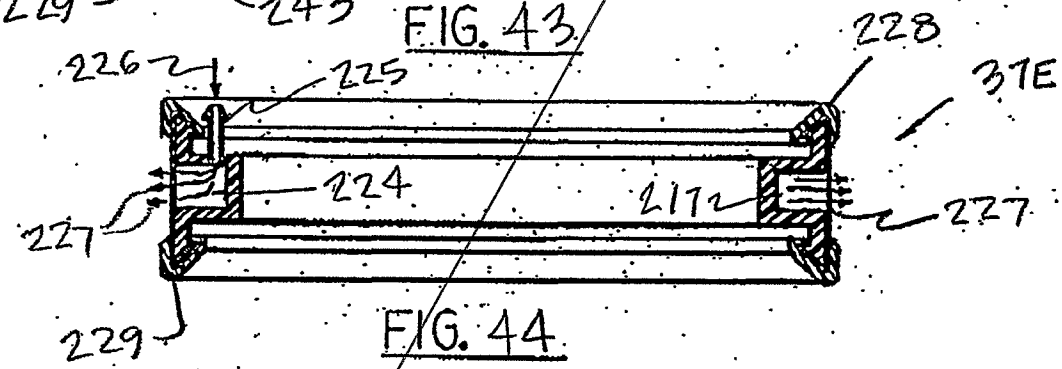


FIG. 44

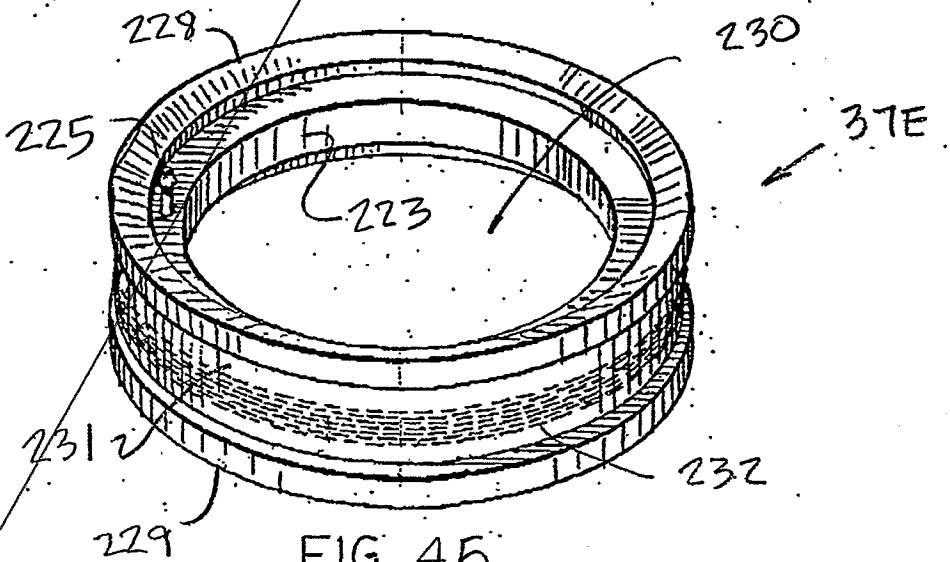


FIG. 45

REPLACEMENT SHEET
Date : 12 APR 2004



Experiment Diffuser Housing

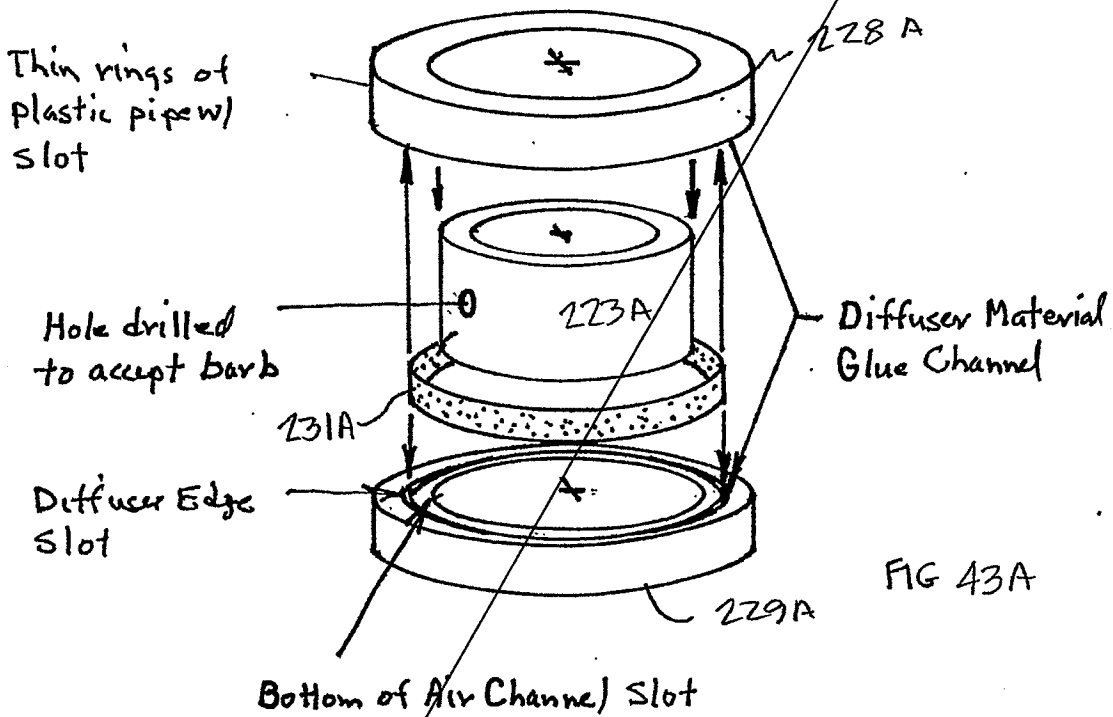


FIG 43A

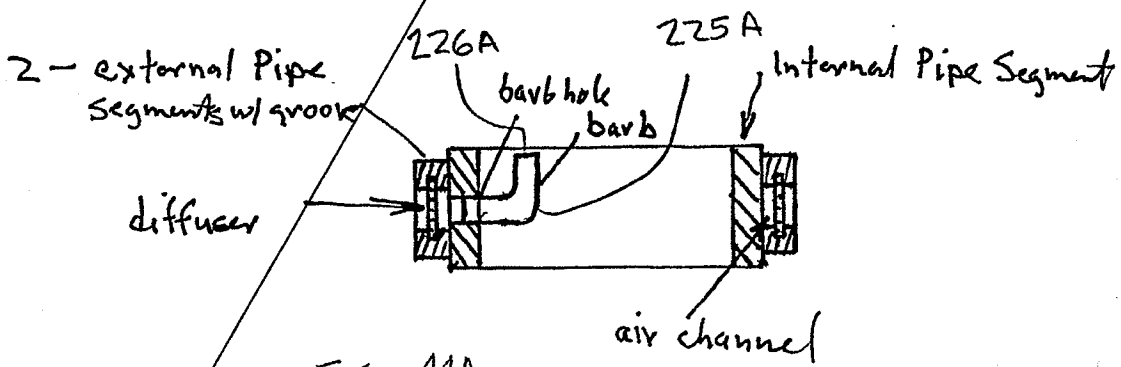


FIG 44A

REPLACEMENT SHEET
Date : 12 APR 2004



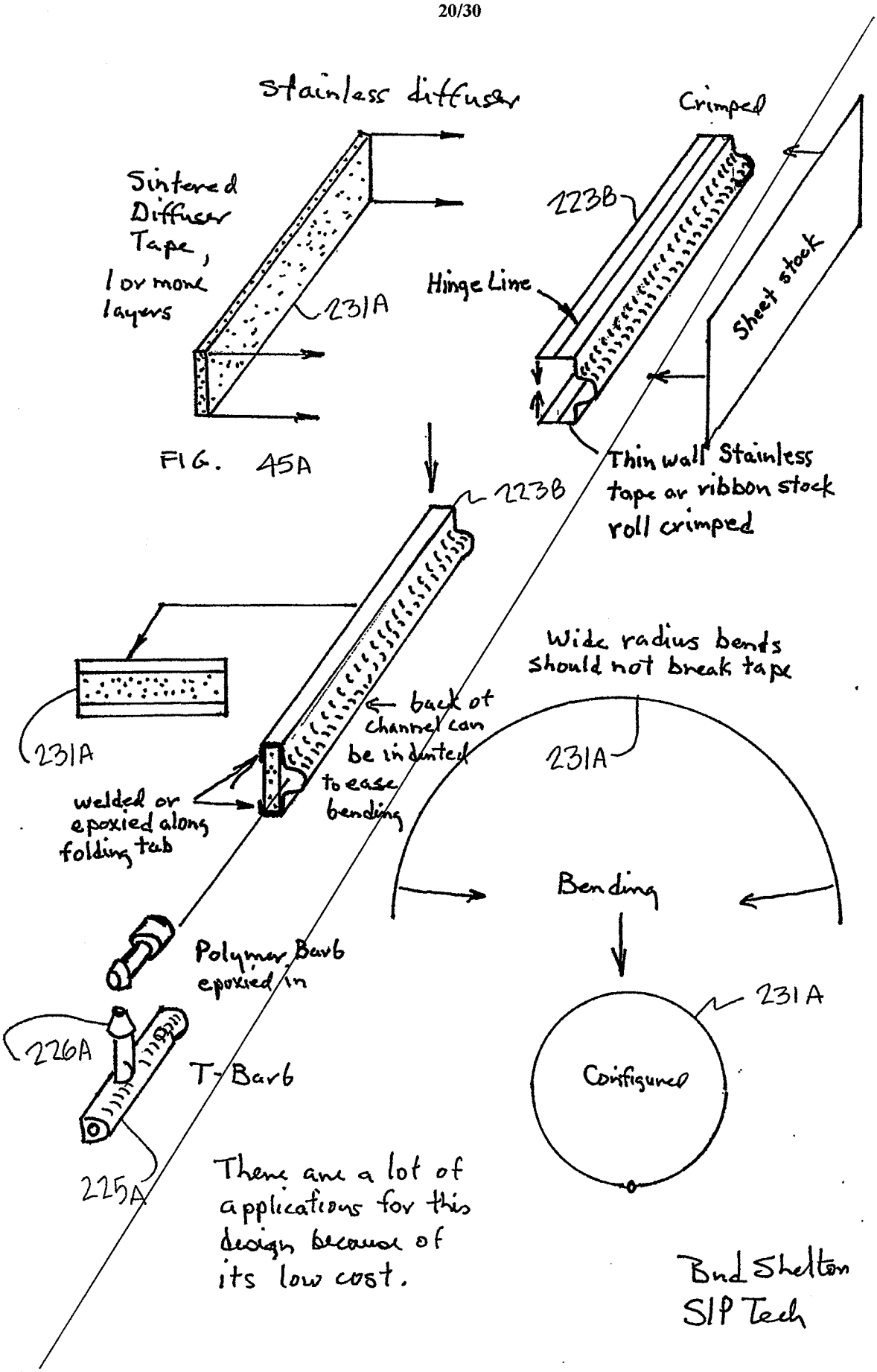


FIG. 45A

REPLACEMENT SHEET
Date : 12 APR 2004

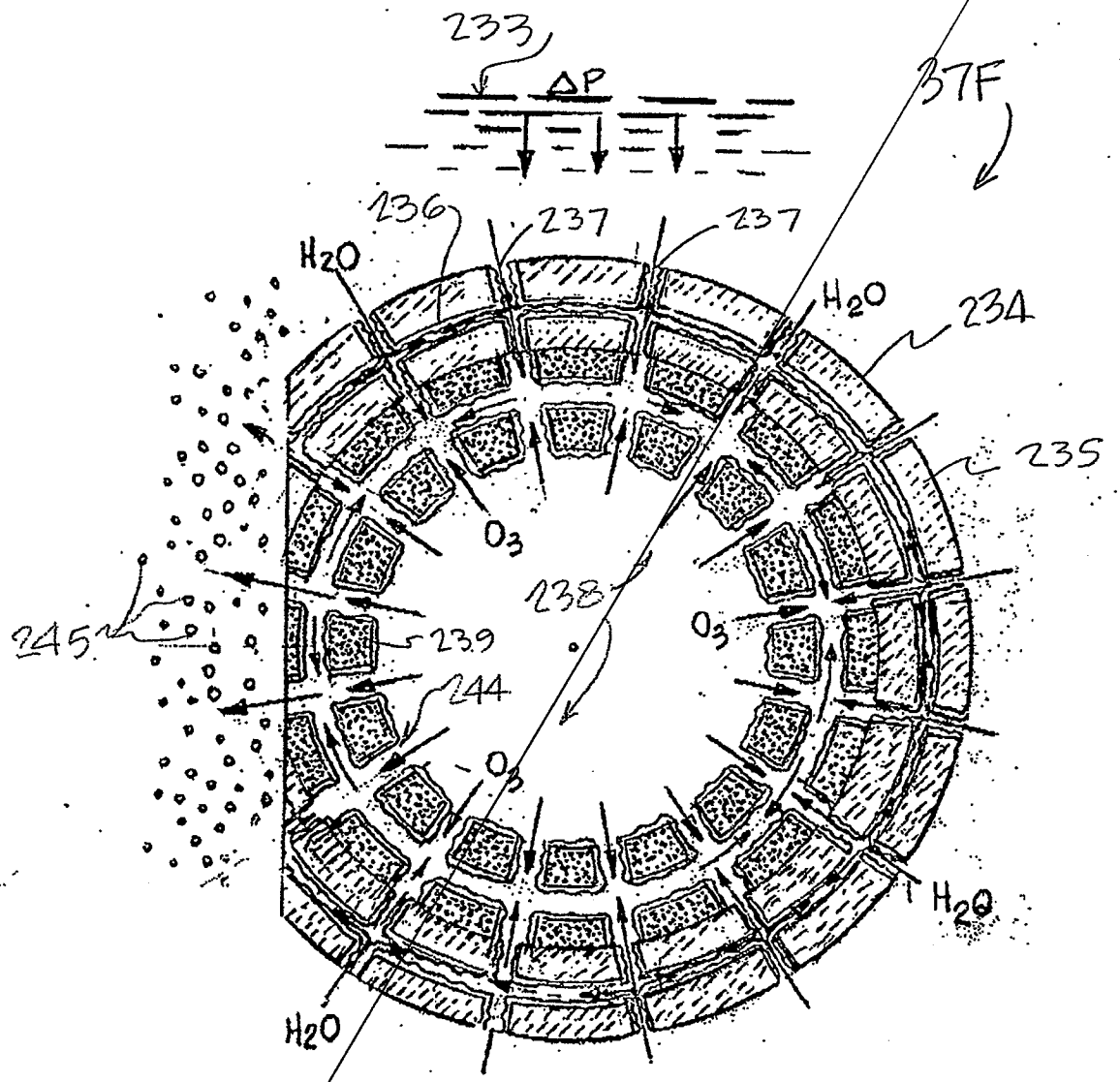


FIG. 46

REPLACEMENT SHEET
Date : 12 APR 2004



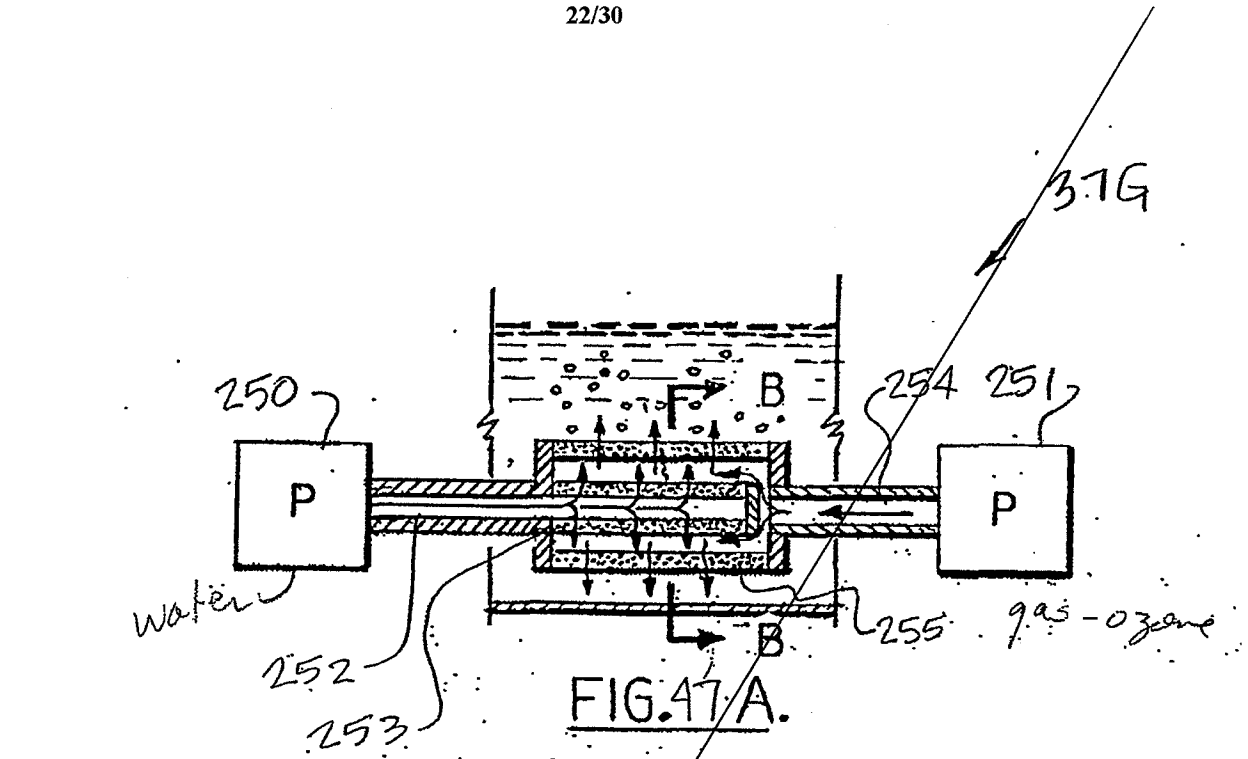


FIG.47A.

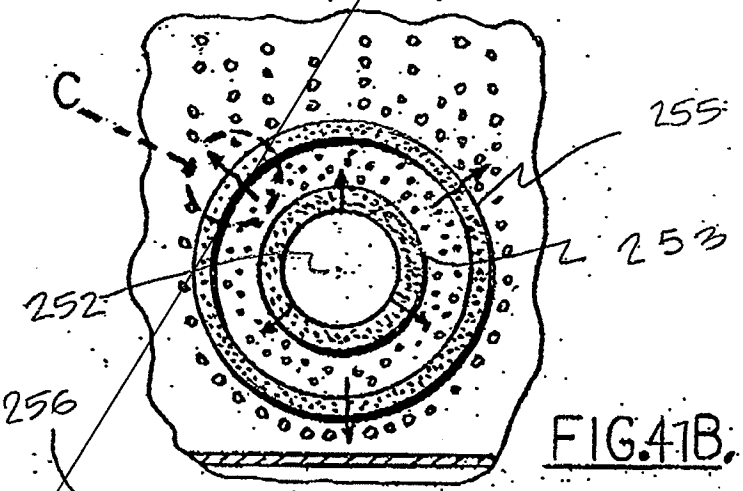


FIG.47B.

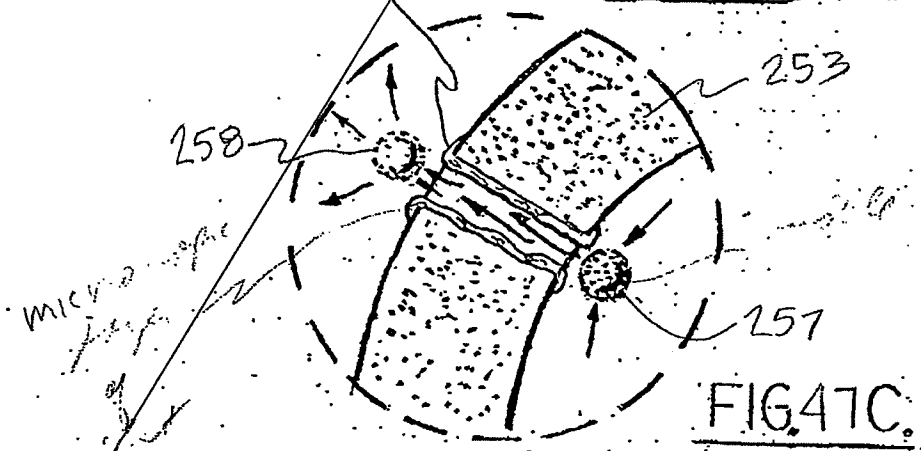


FIG.47C.

REPLACEMENT SHEET
12 APR 2004
Date :.....



Low Pressure Micro Bubble Diffuser Technology.

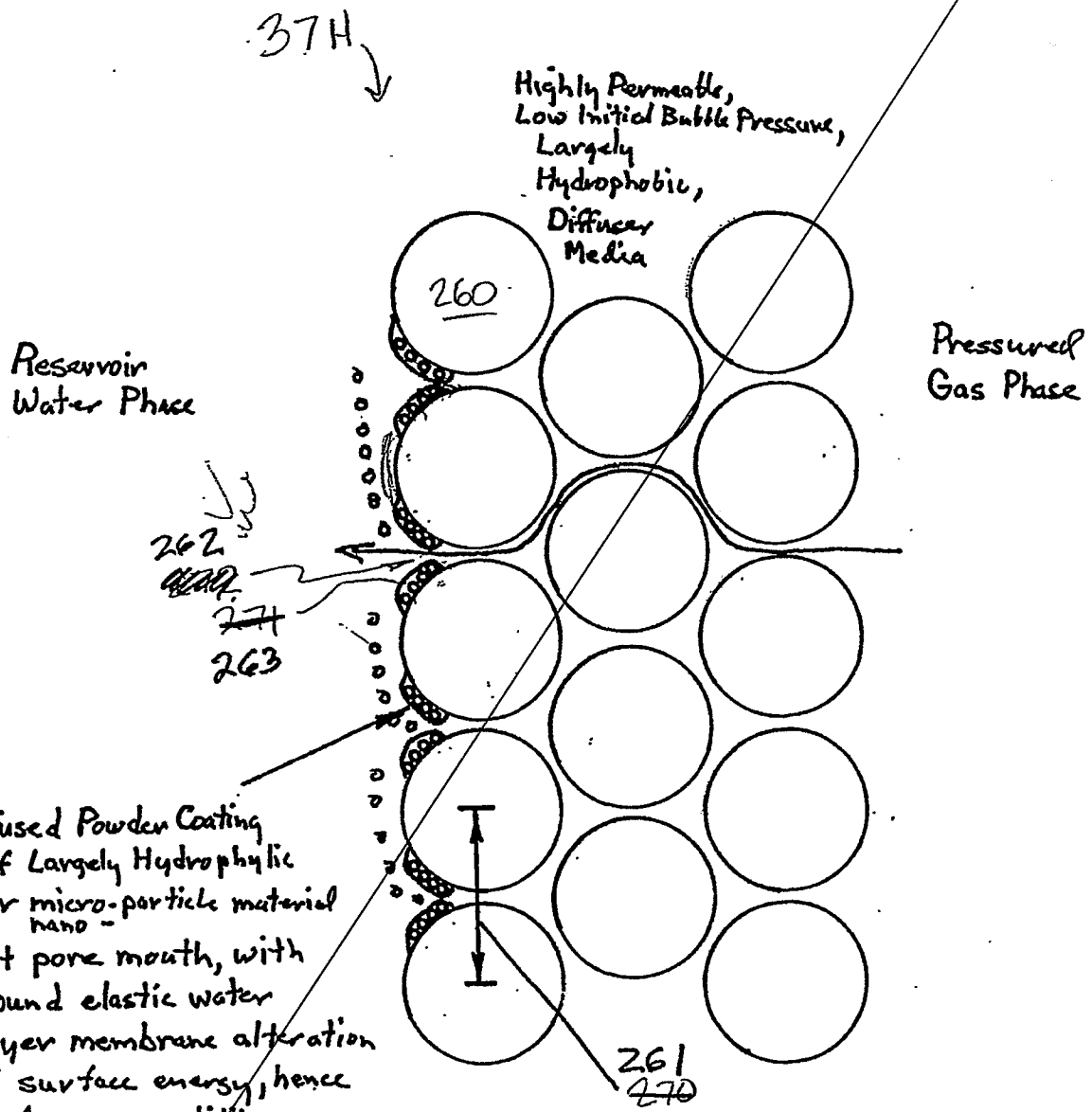


FIG 48

REPLACEMENT SHEET
Date : 12 APR 2004



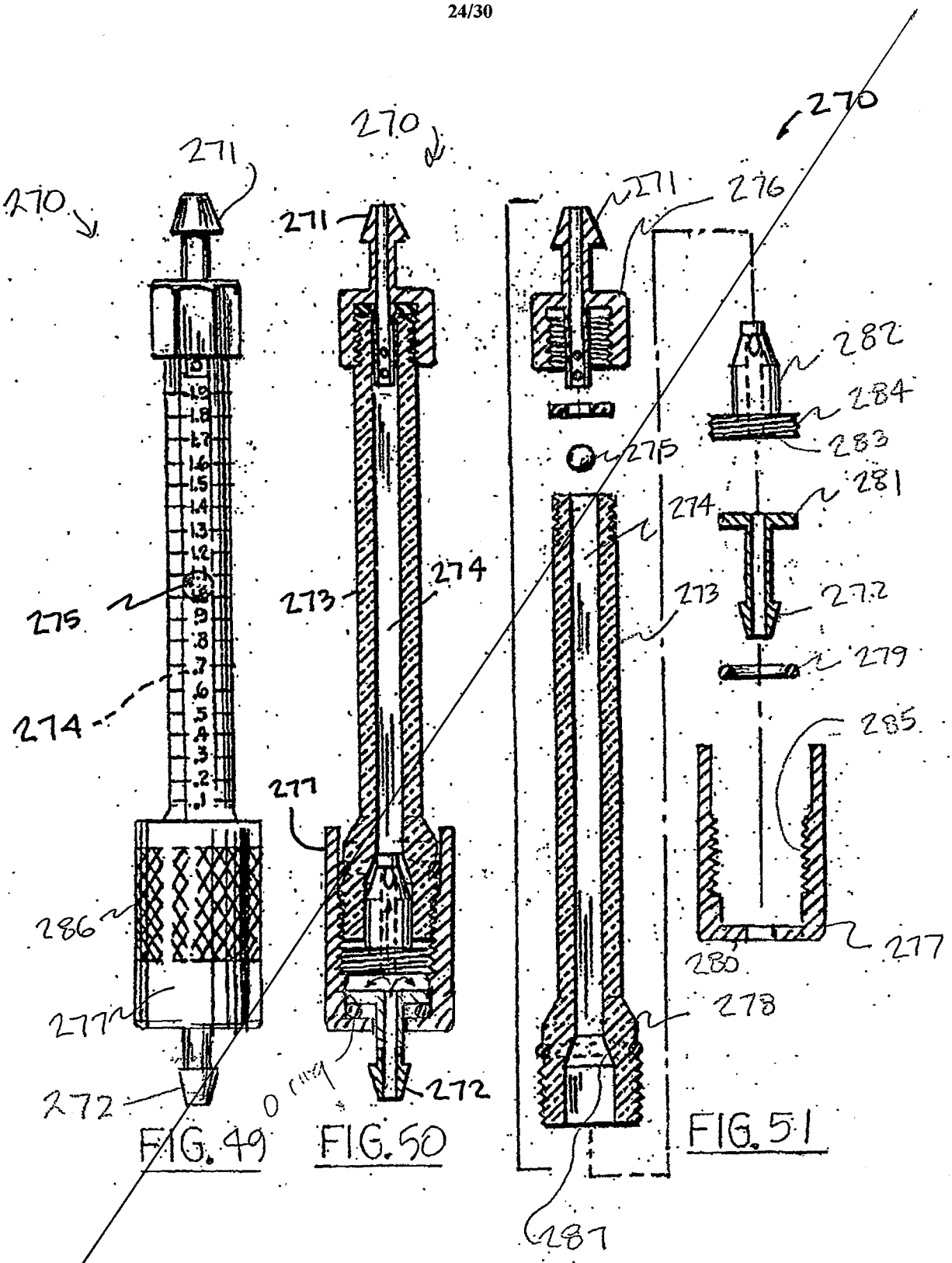


FIG. 49 FIG. 50 FIG. 51

REPLACEMENT SHEET
Date : 12 APR 2004



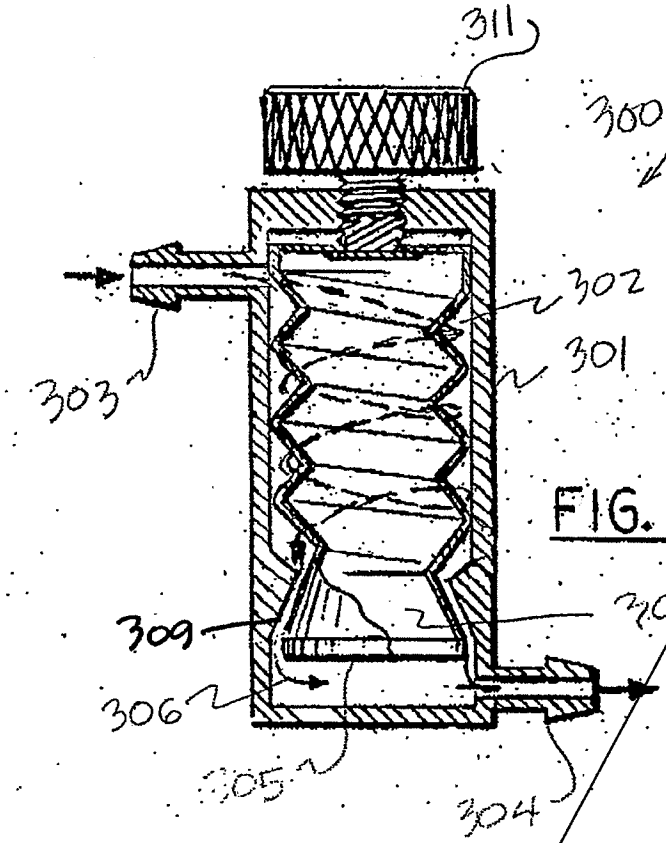


FIG. 52

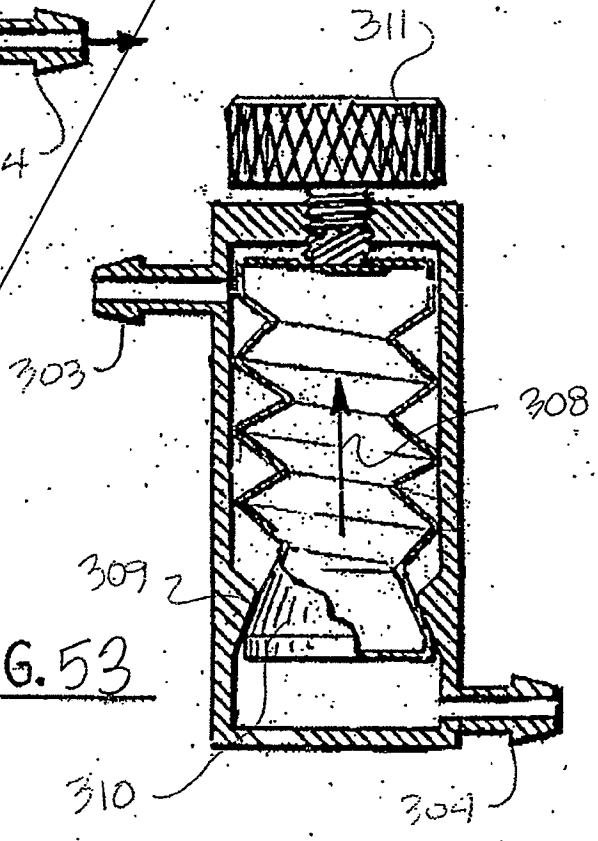


FIG. 53

REPLACEMENT SHEET
Date : 12 APR 2004



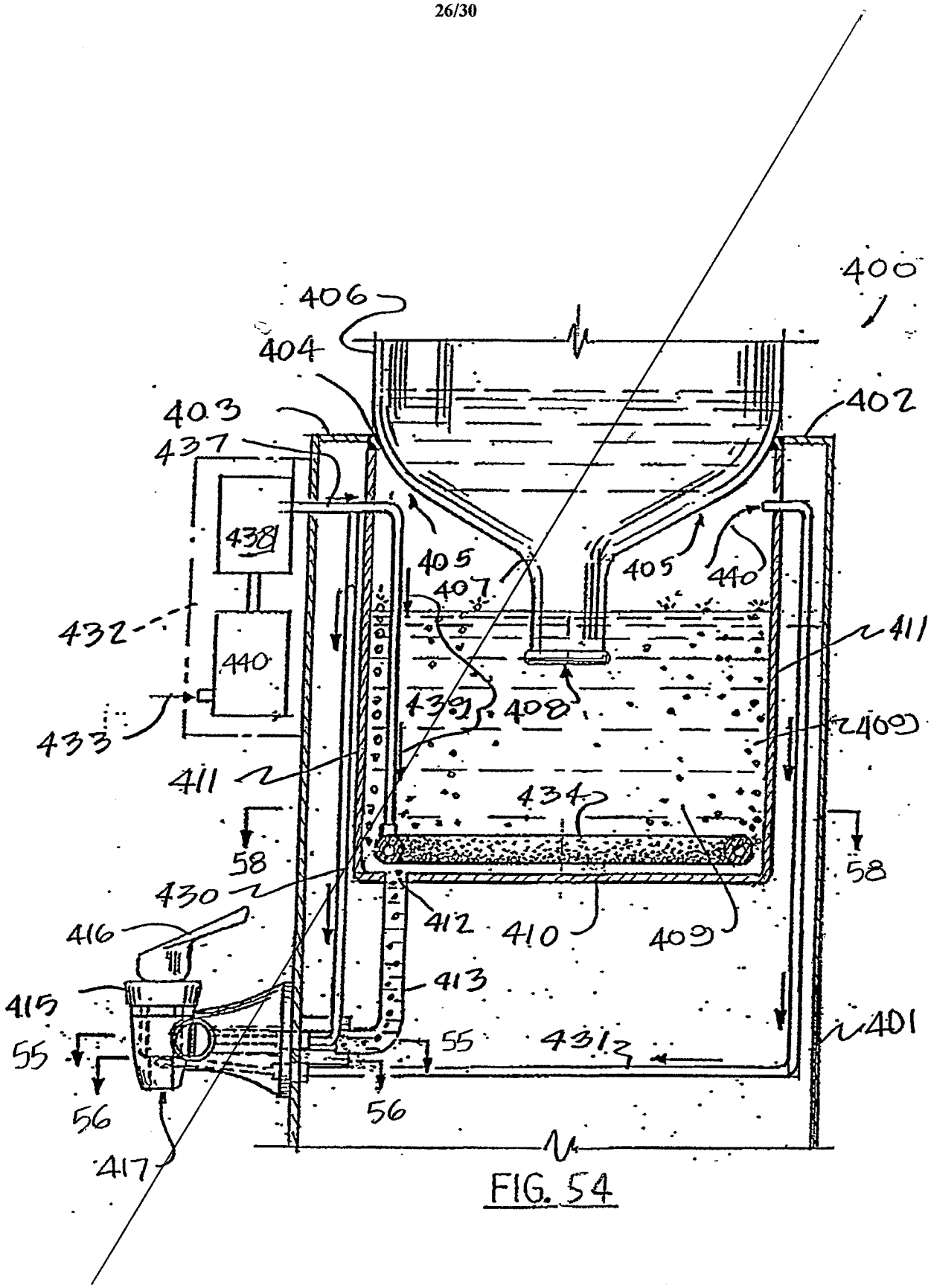


FIG. 54

REPLACEMENT SHEET
Date : 12 APR 2004



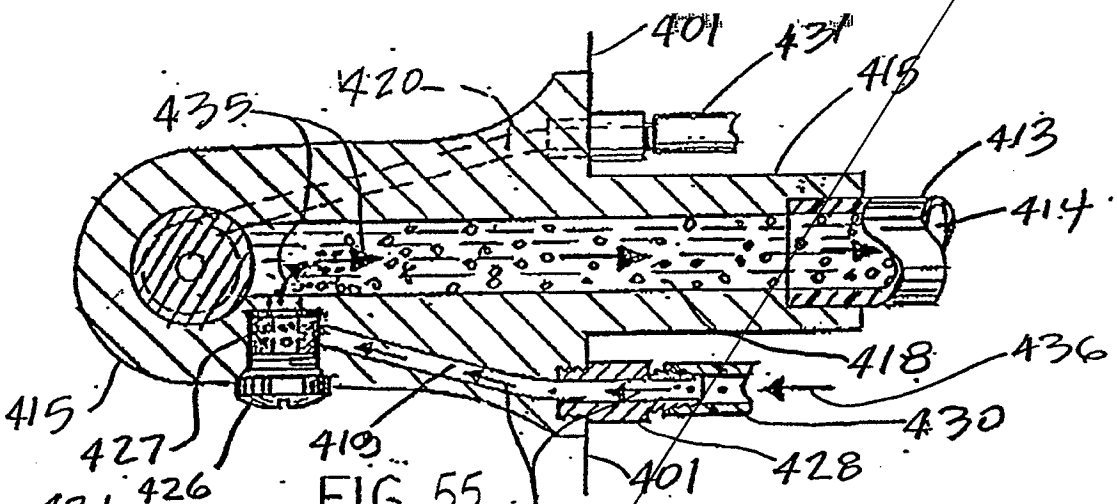


FIG. 55

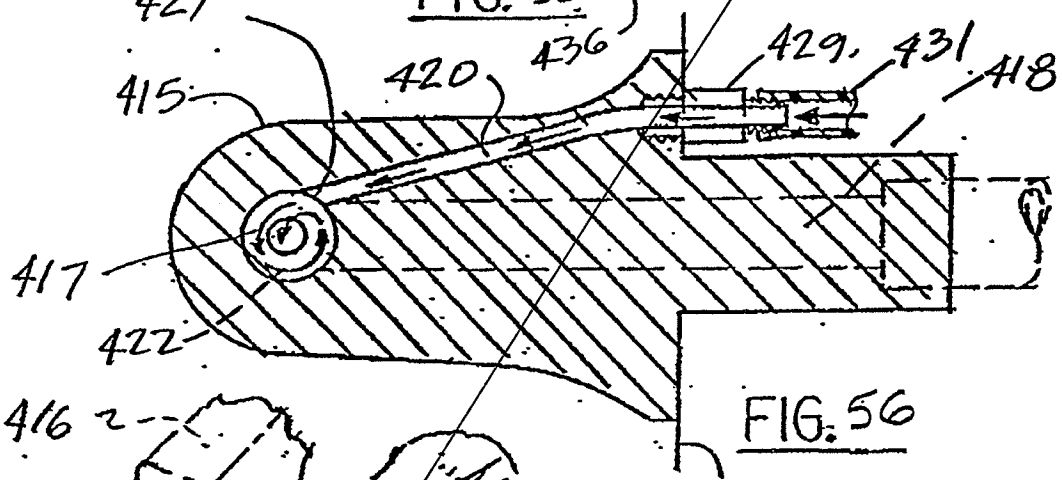


FIG. 56

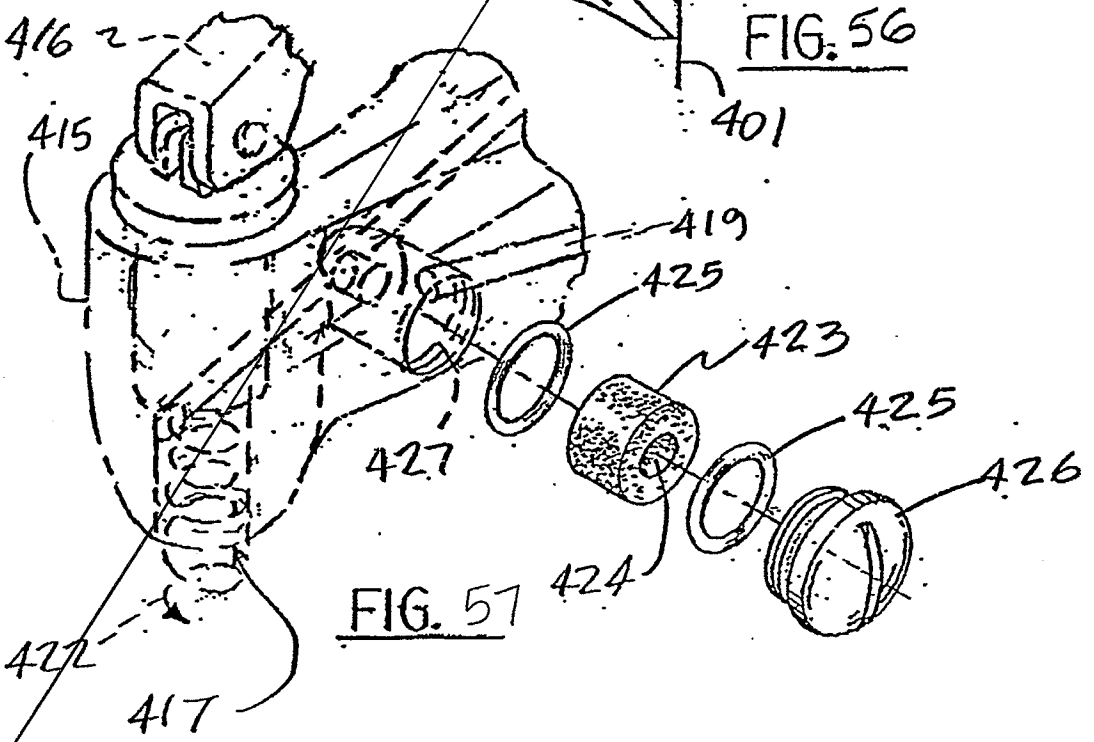


FIG. 57

REPLACEMENT SHEET
Date : 12 APR 2004



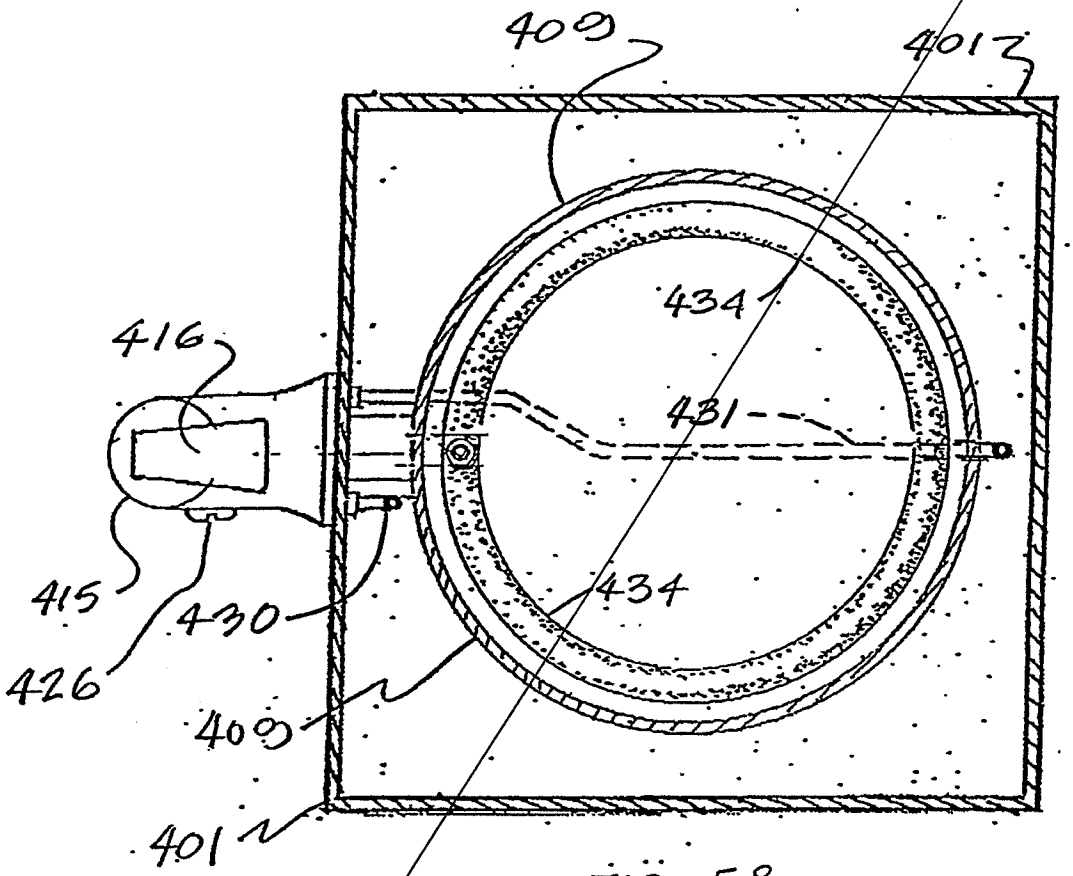


FIG. 58

REPLACEMENT SHEET
Date : 12 APR 2004



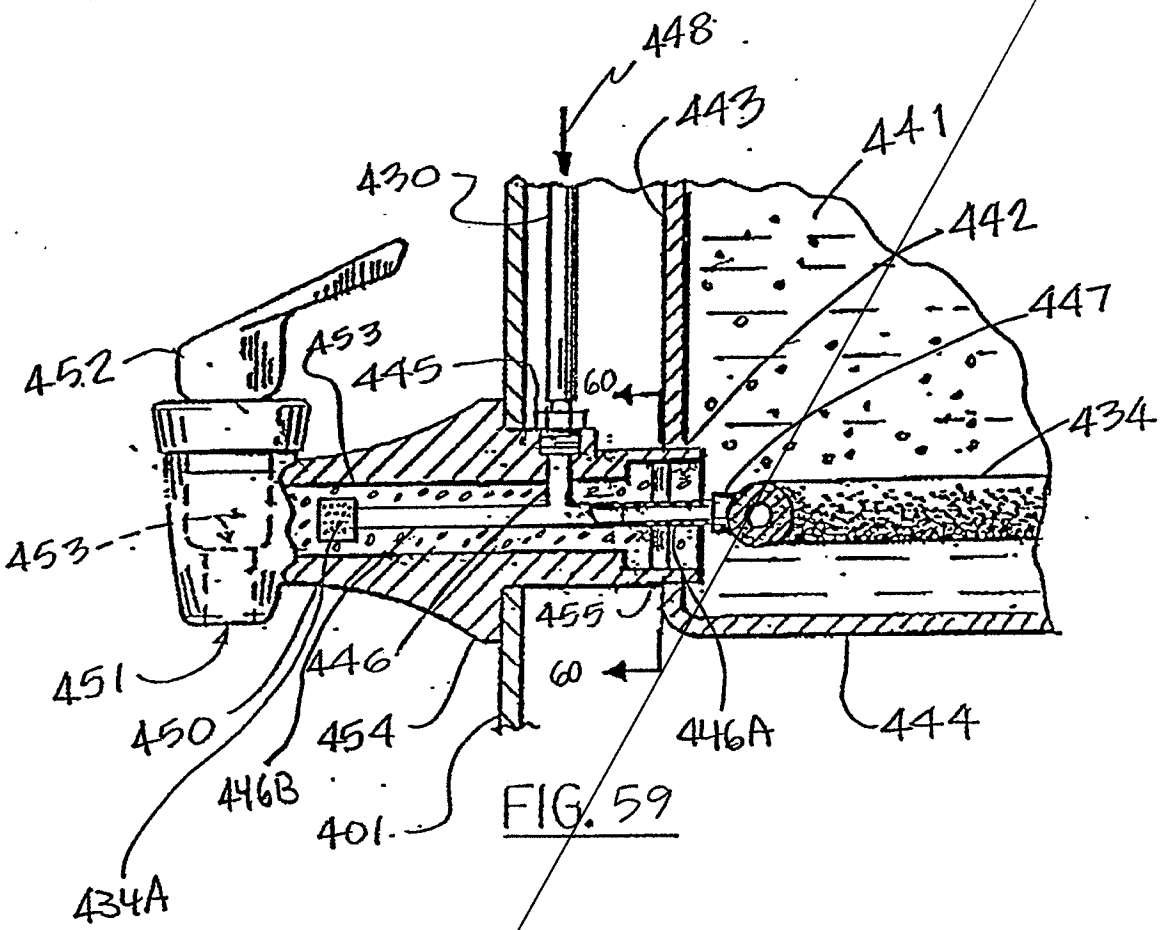


FIG. 59

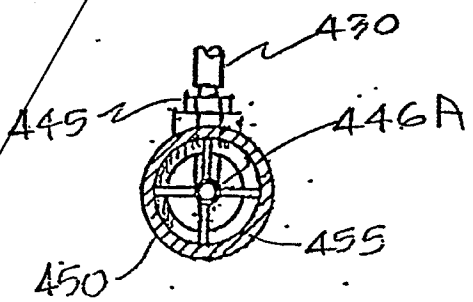


FIG. 60

REPLACEMENT SHEET
Date : 12 APR 2004



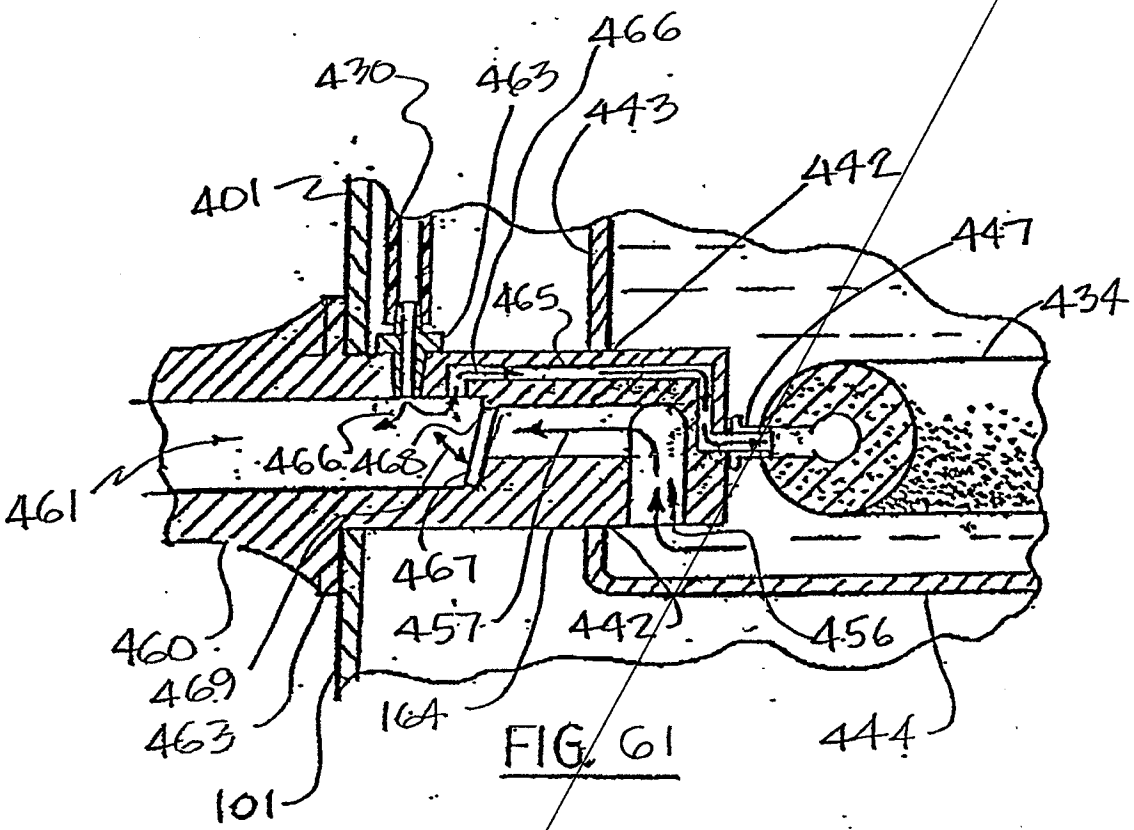


FIG. 61

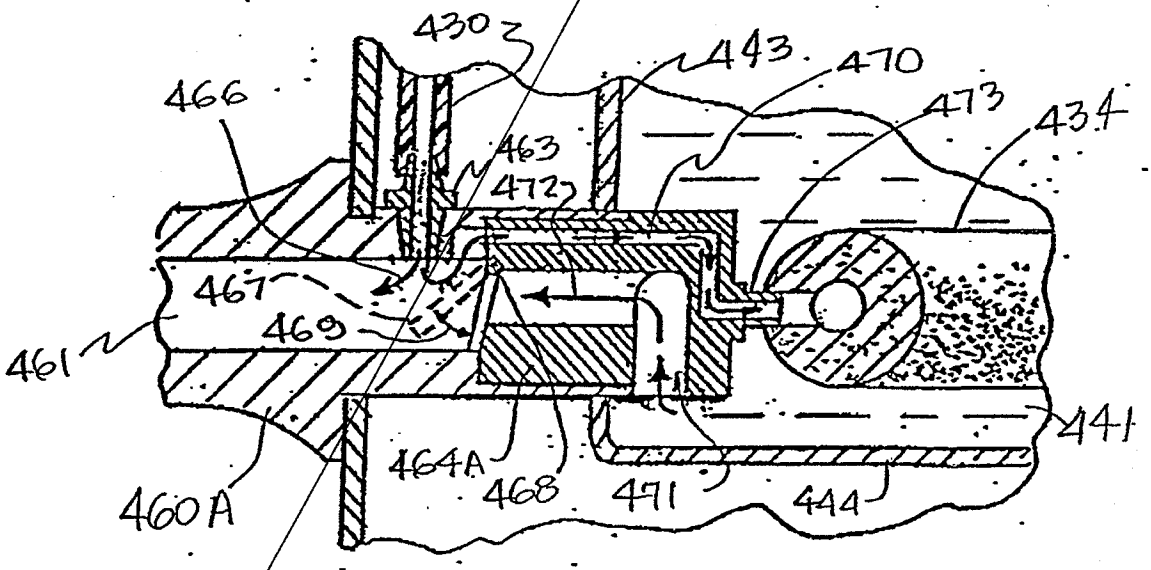


FIG. 62

REPLACEMENT SHEET
Date : 12 APR 2004



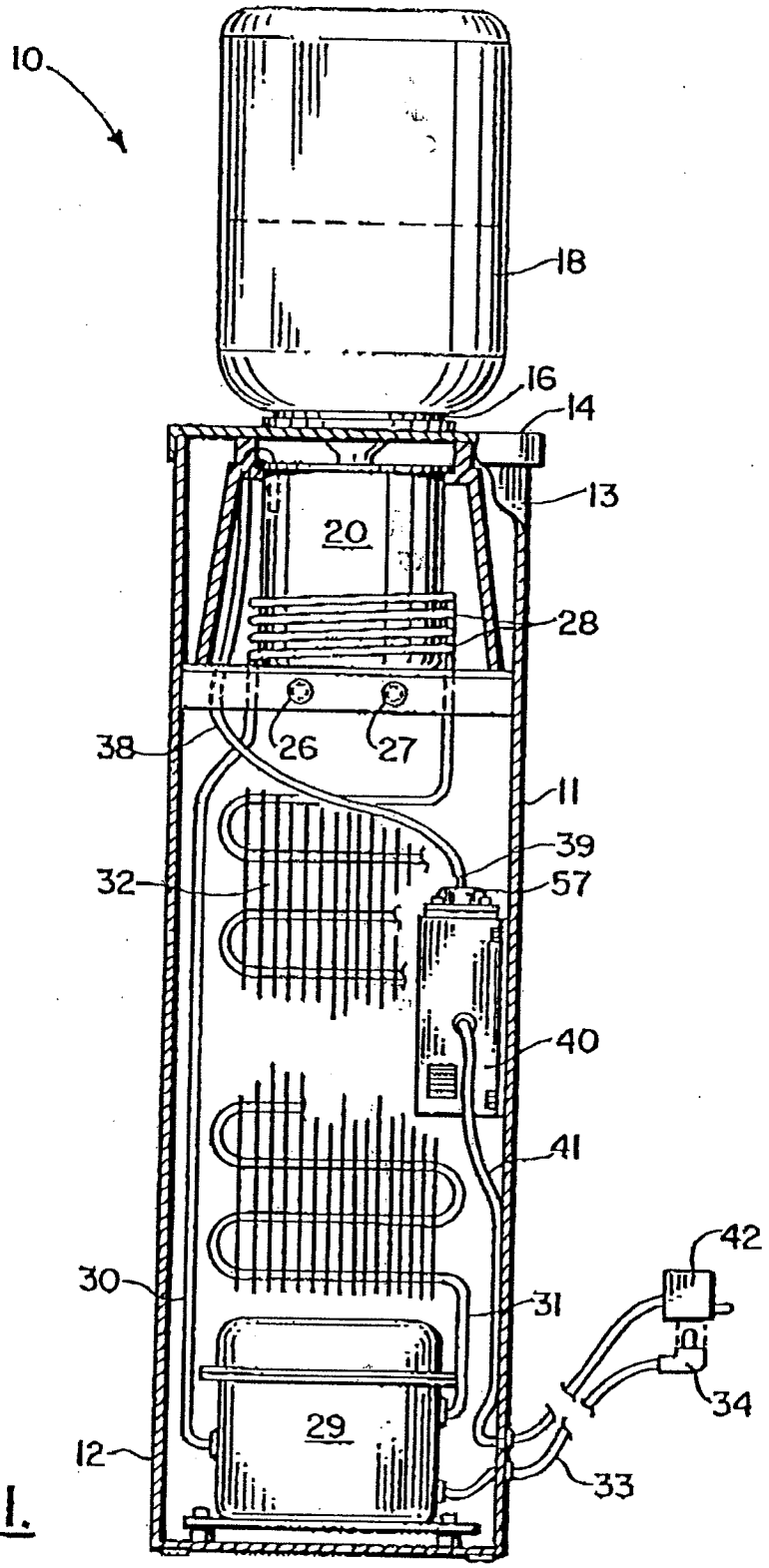


FIG. 1.

REPLACEMENT SHEET
Date : 12 APR 2004



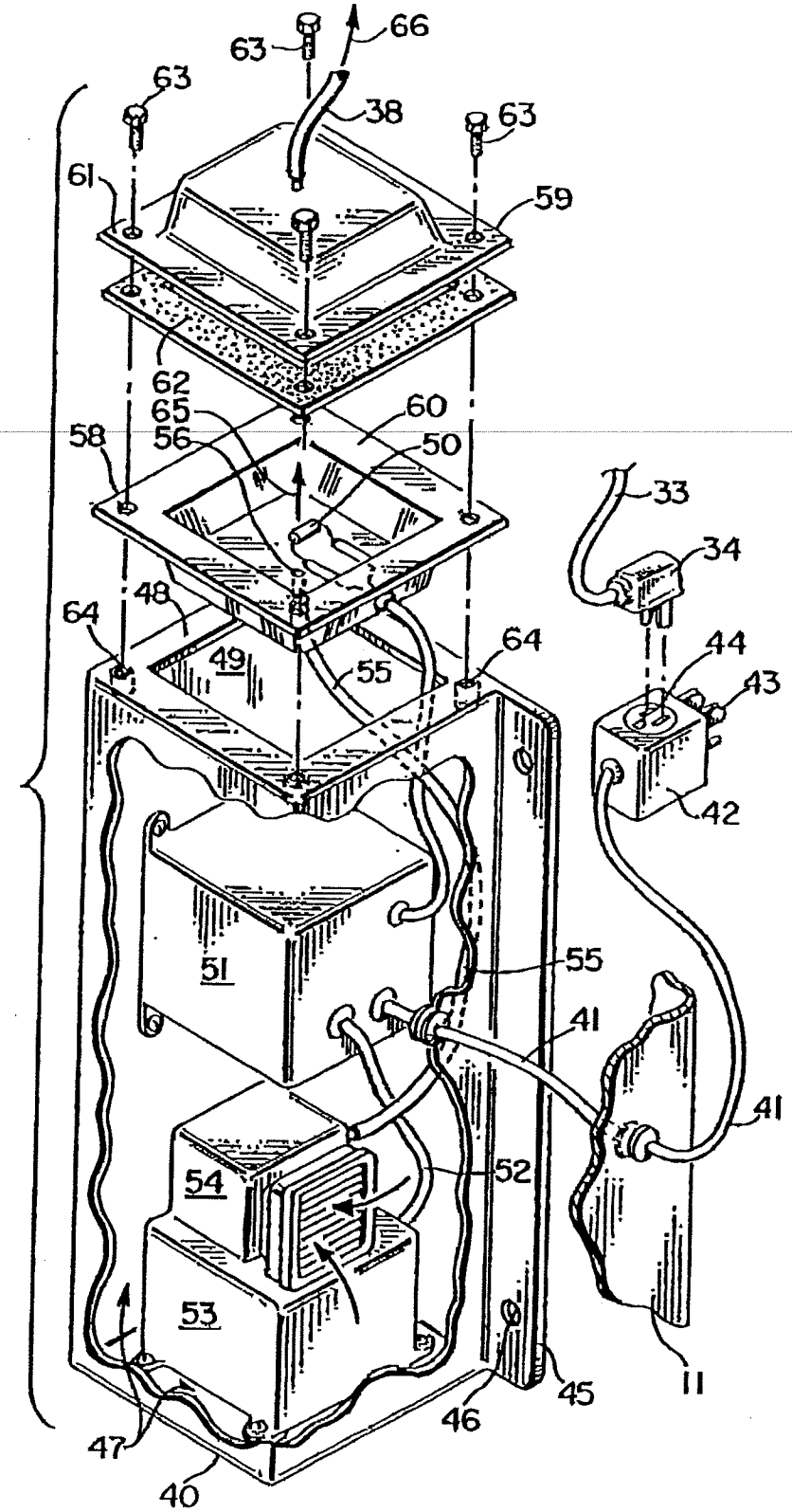


FIG. 2.

REPLACEMENT SHEET
Date : 12 APR 2004



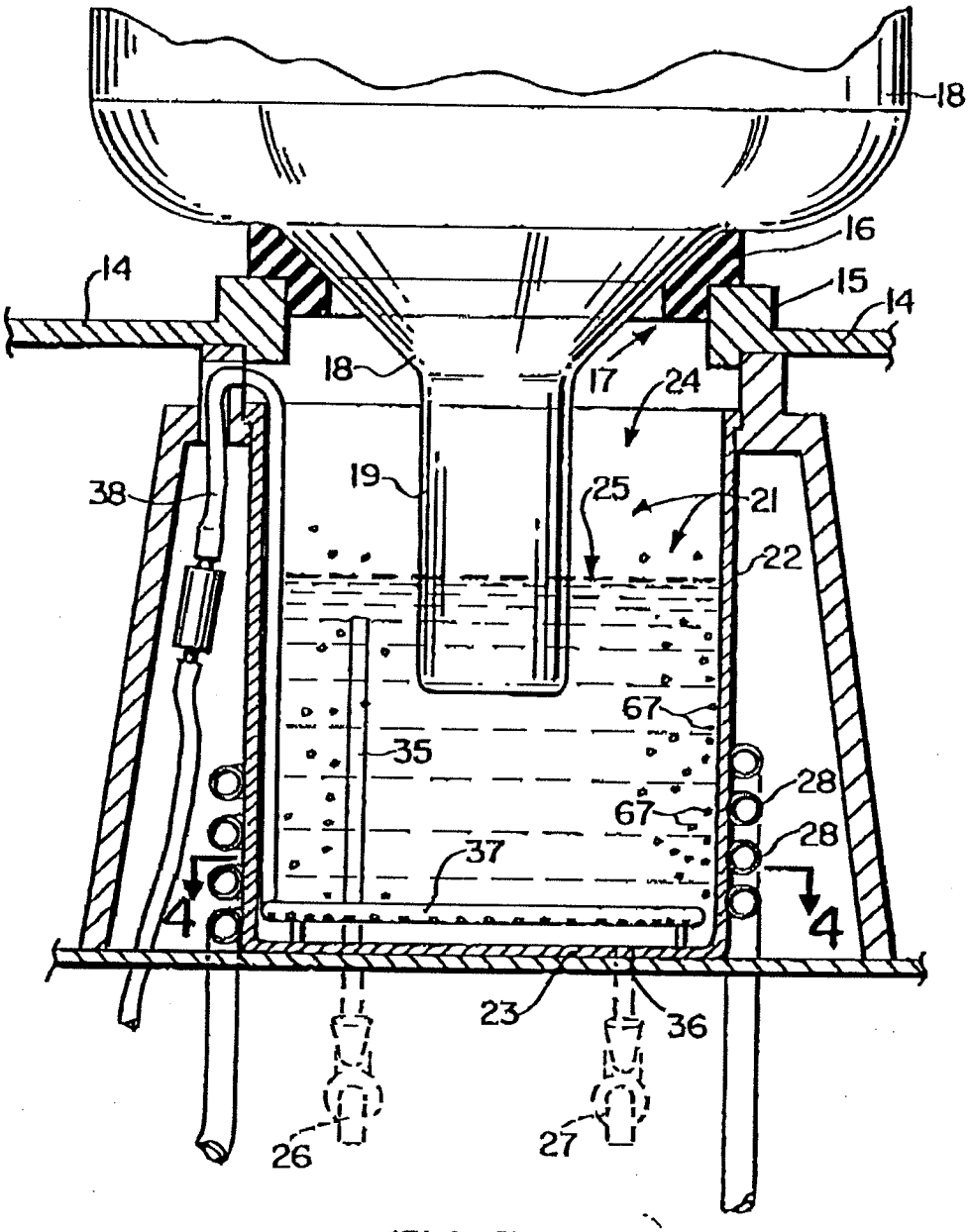


FIG. 3.

REPLACEMENT SHEET
12 APR 2004
Date :.....

4/30°

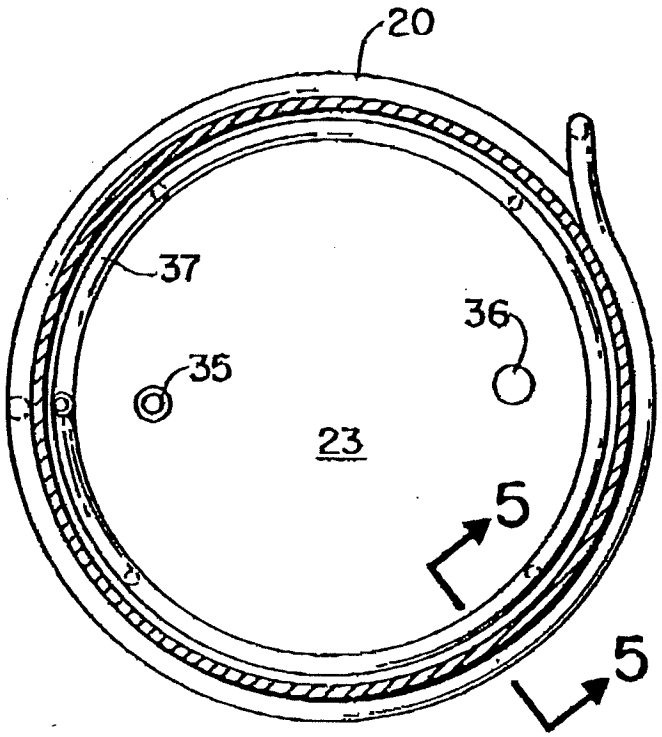


FIG. 4.

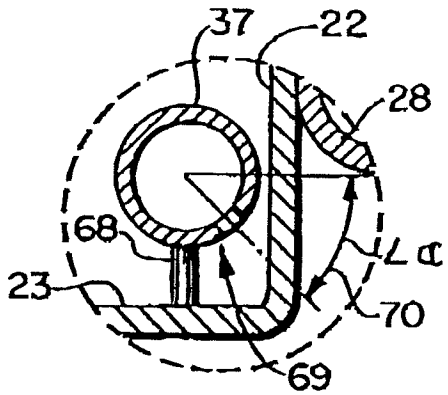


FIG. 6.

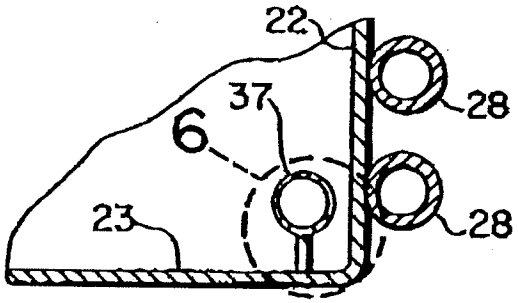


FIG. 5.

REPLACEMENT SHEET
Date : 12 APR 2004



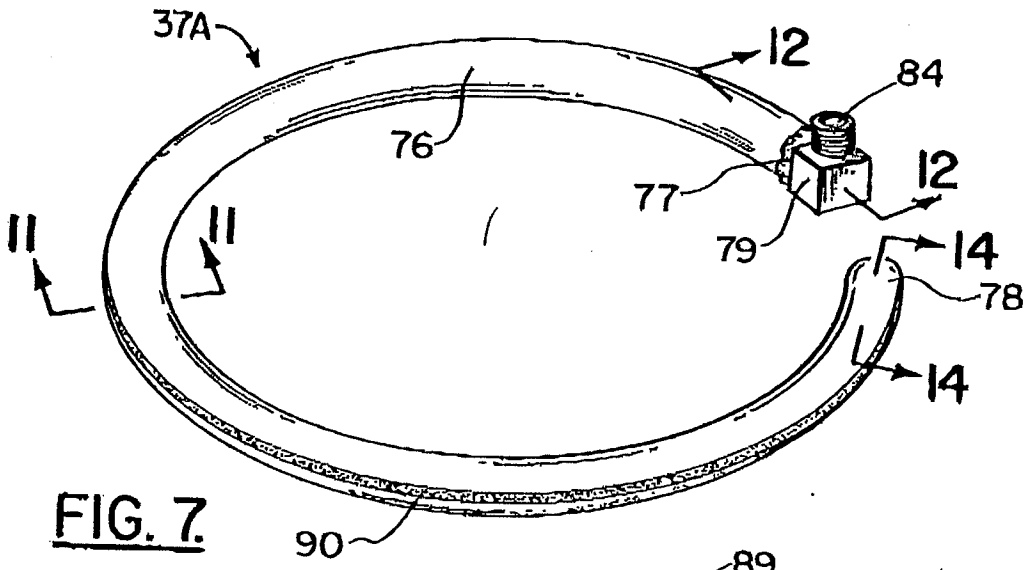


FIG. 7.

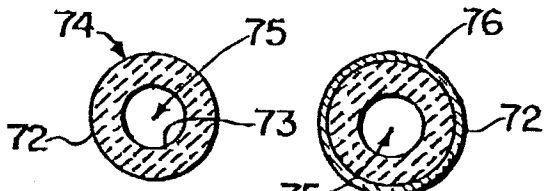


FIG. 8.




FIG. 9.

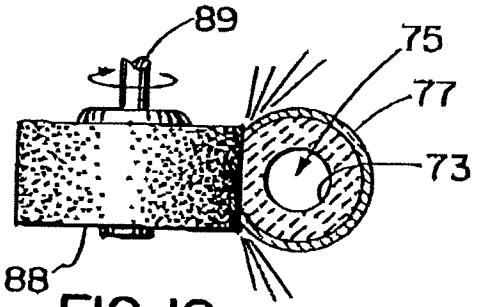


FIG. 10.

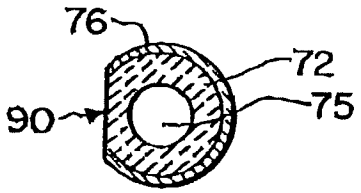


FIG. 11.

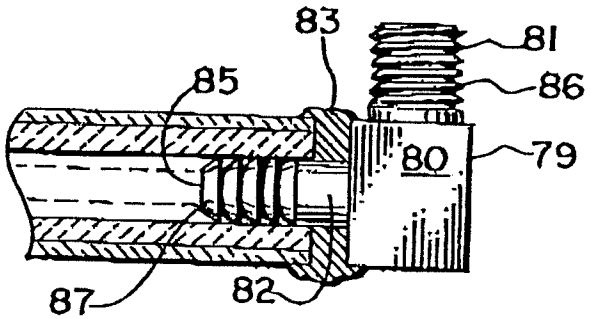


FIG. 12.

75

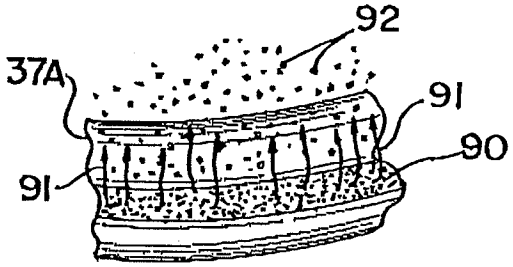


FIG. 13.

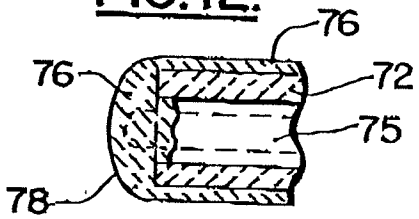


FIG. 14.

REPLACEMENT SHEET
Date : 12 APR 2004



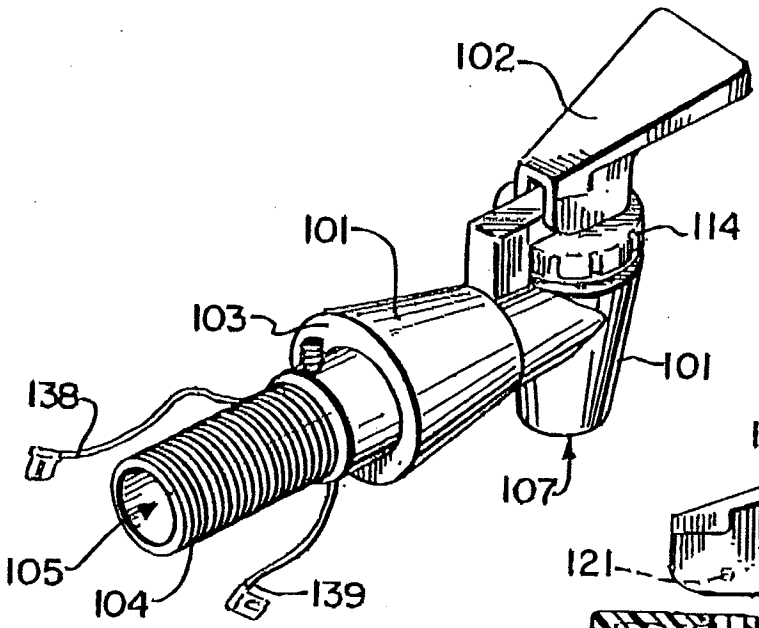


FIG. 15.

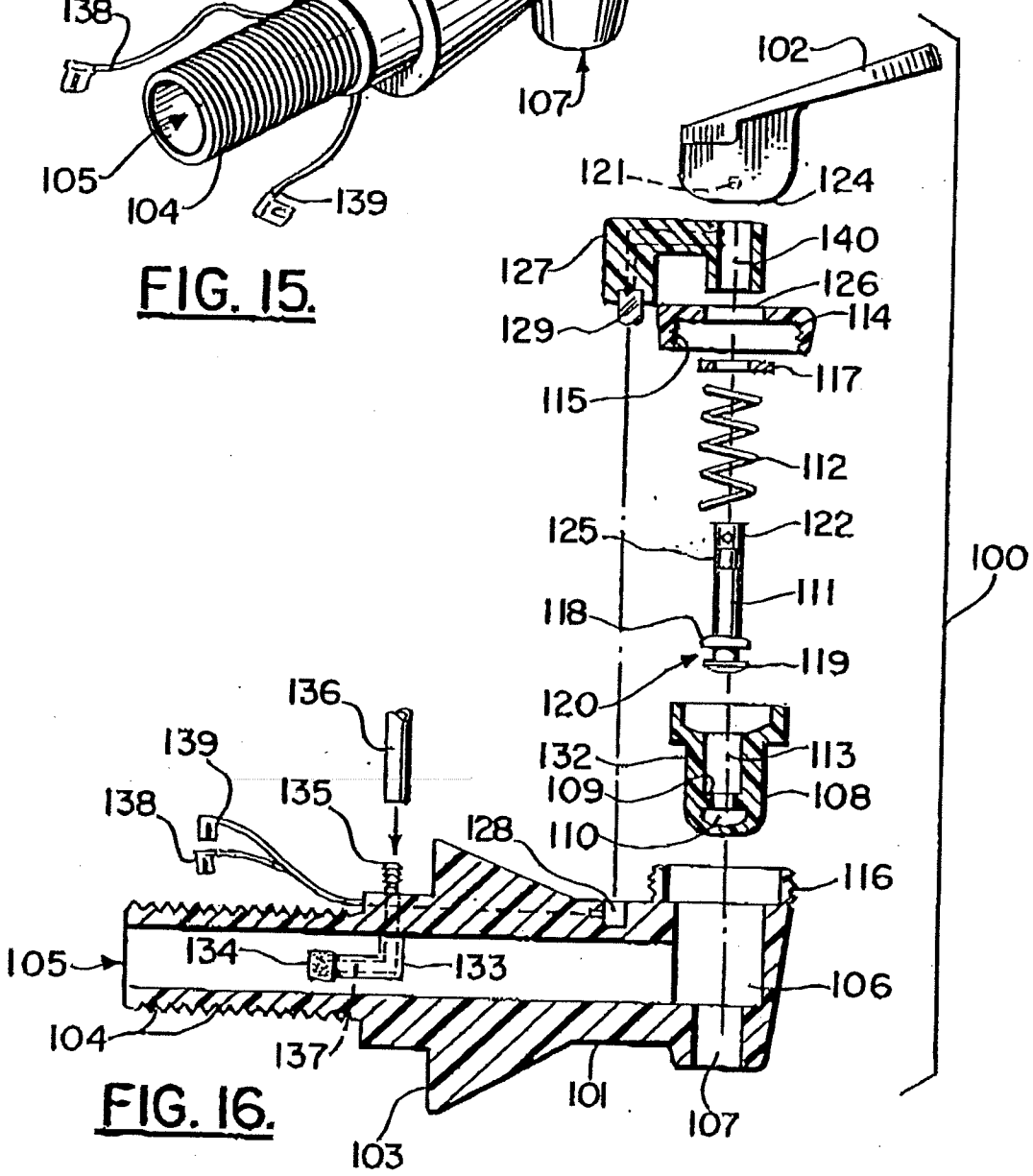


FIG. 16.

REPLACEMENT SHEET
Date : 12 APR 2004



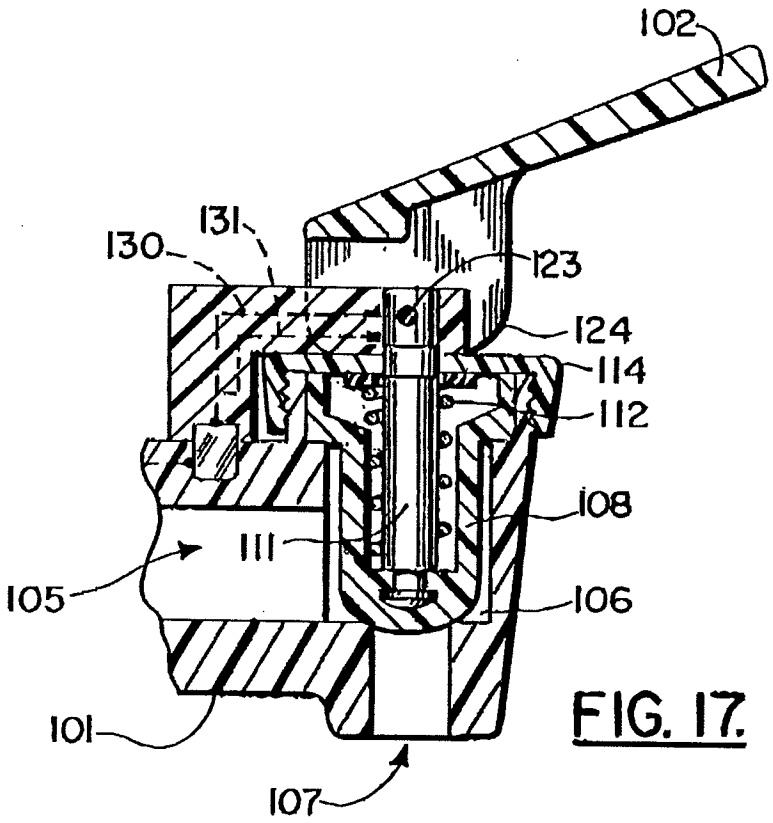


FIG. 17.

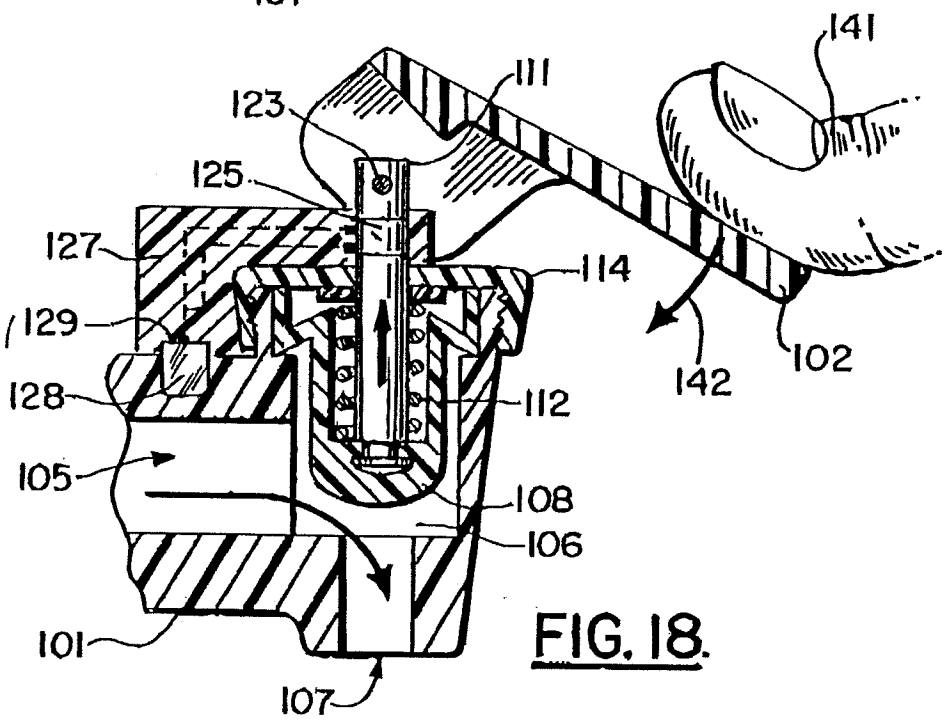


FIG. 18.

REPLACEMENT SHEET
Date : 12 APR 2004



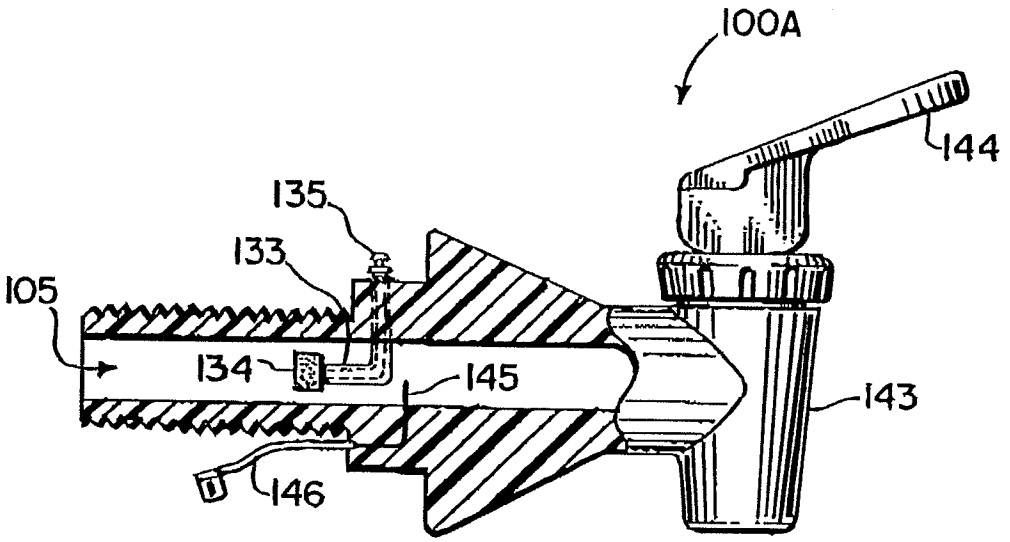


FIG. 19.

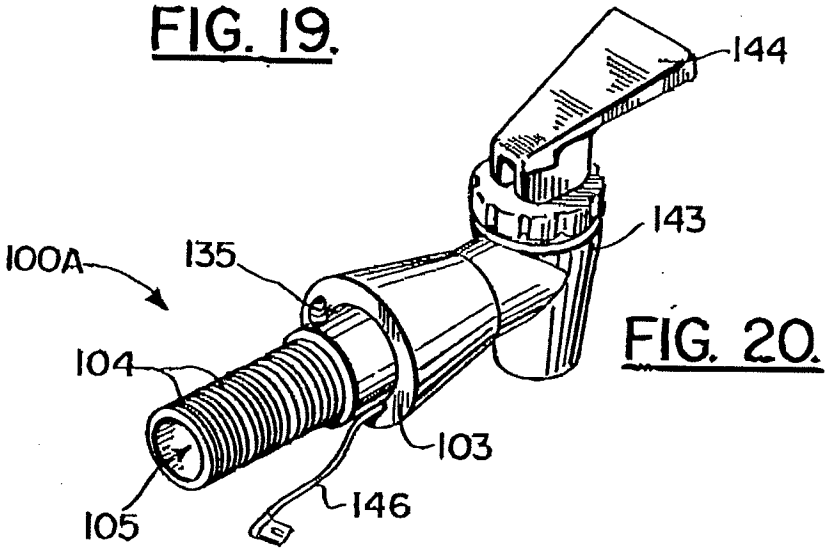


FIG. 20.

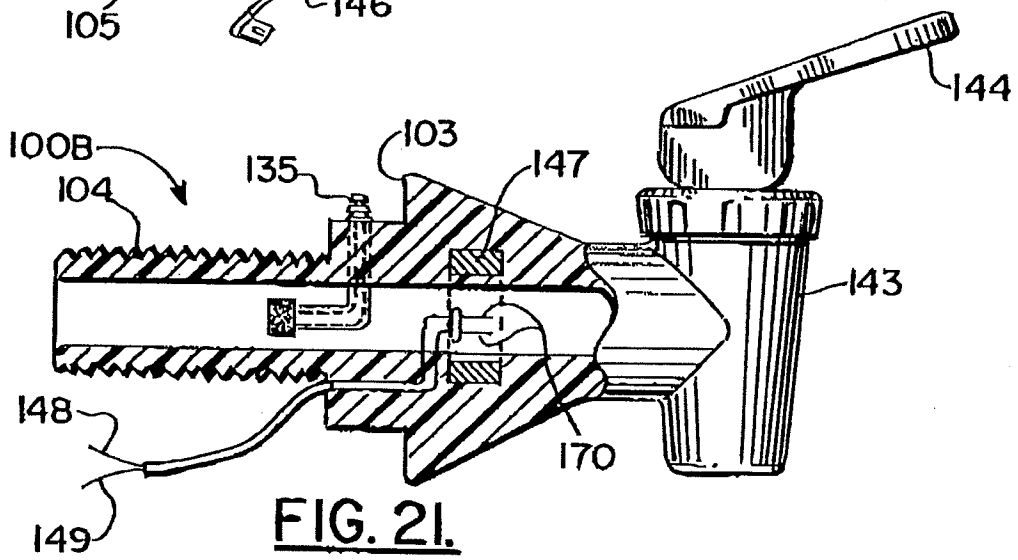


FIG. 21.

REPLACEMENT SHEET
Date : 12 APR 2004



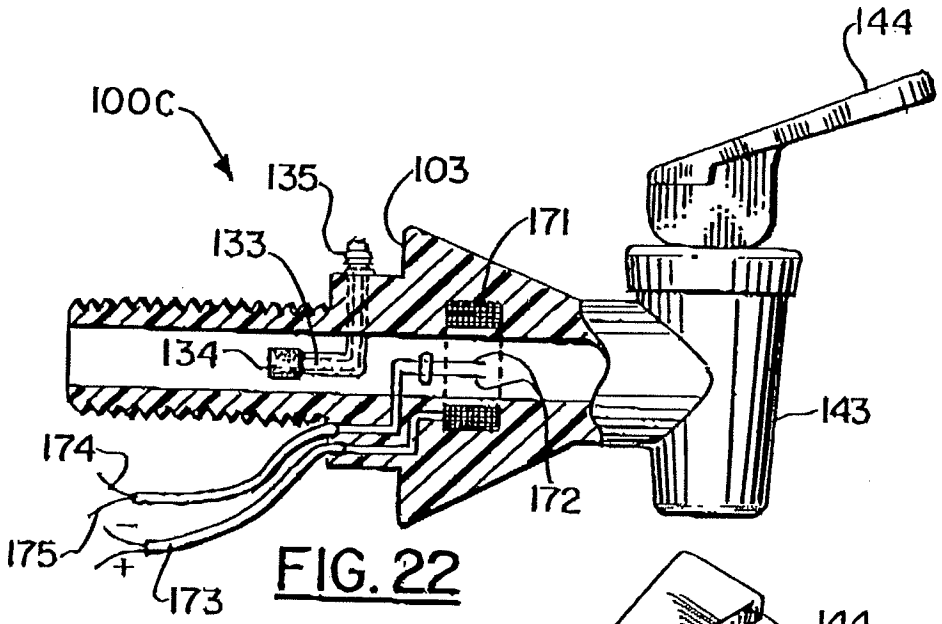


FIG. 22

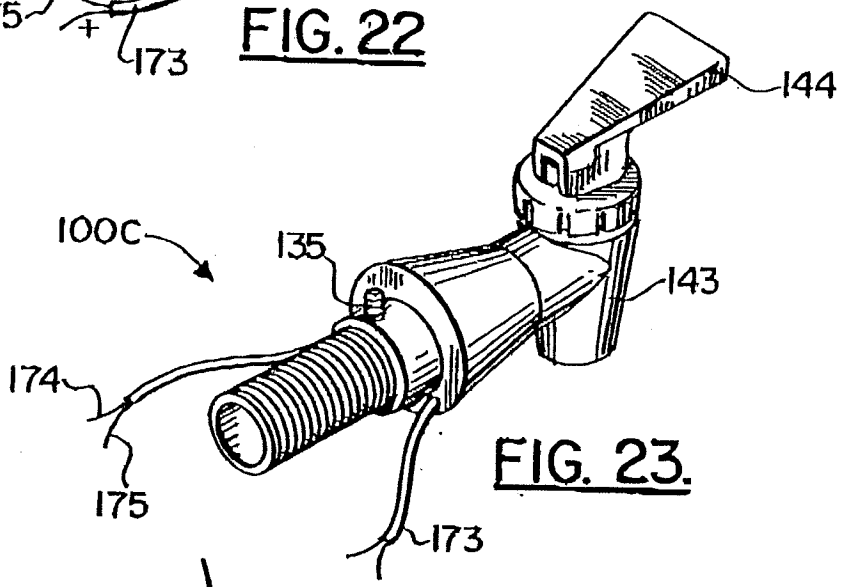


FIG. 23.

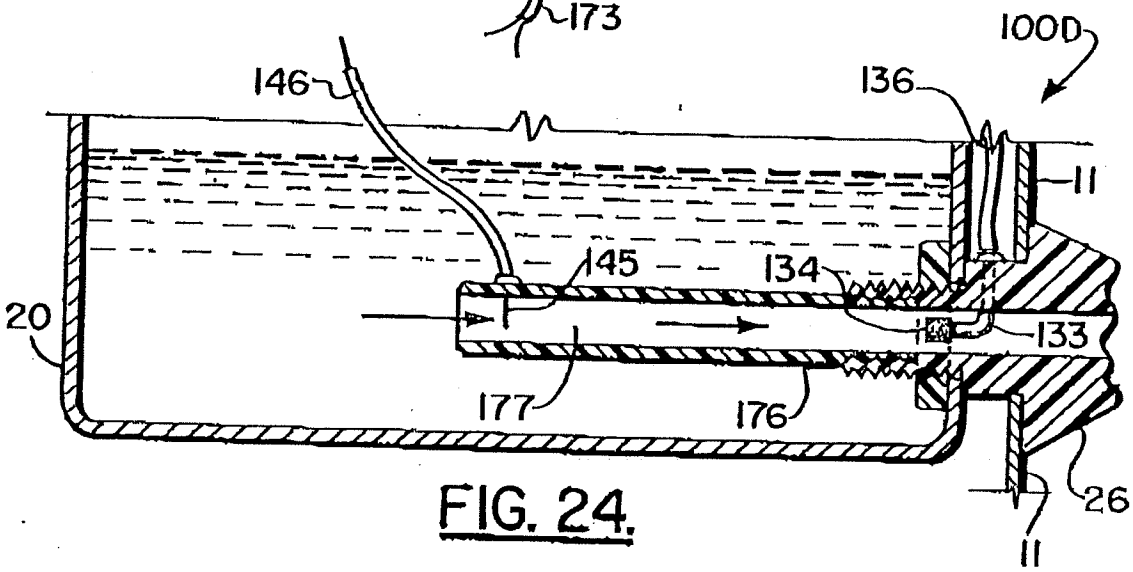


FIG. 24.

REPLACEMENT SHEET
Date : 12 APR 2004



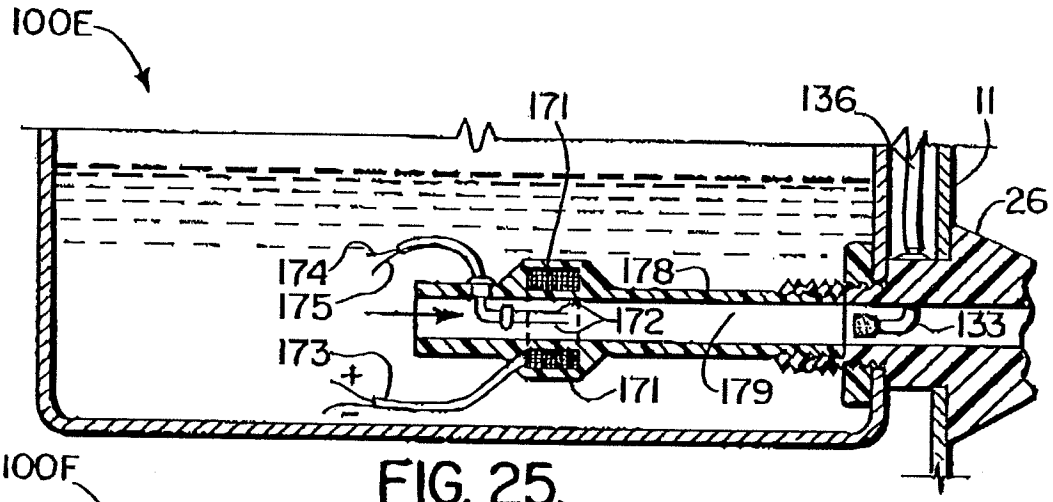


FIG. 25.

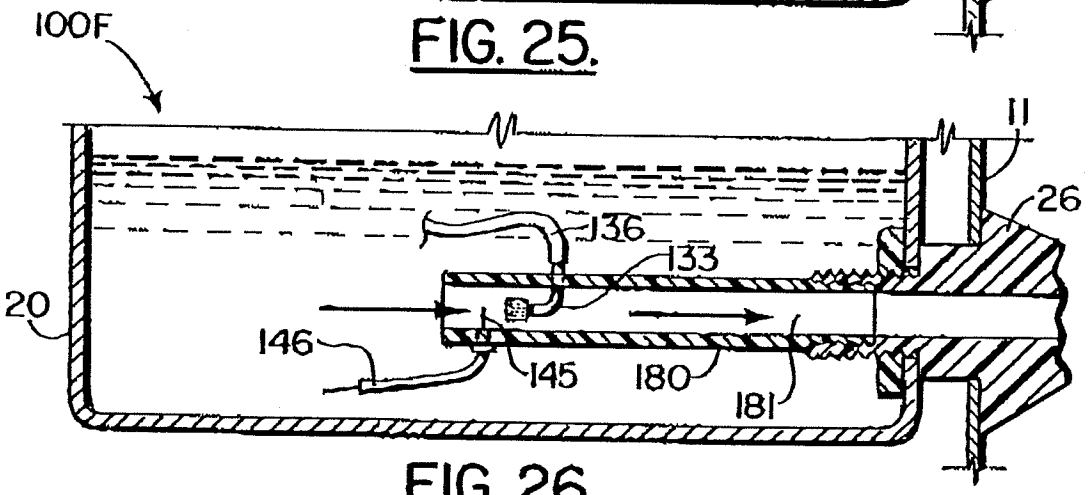


FIG. 26.

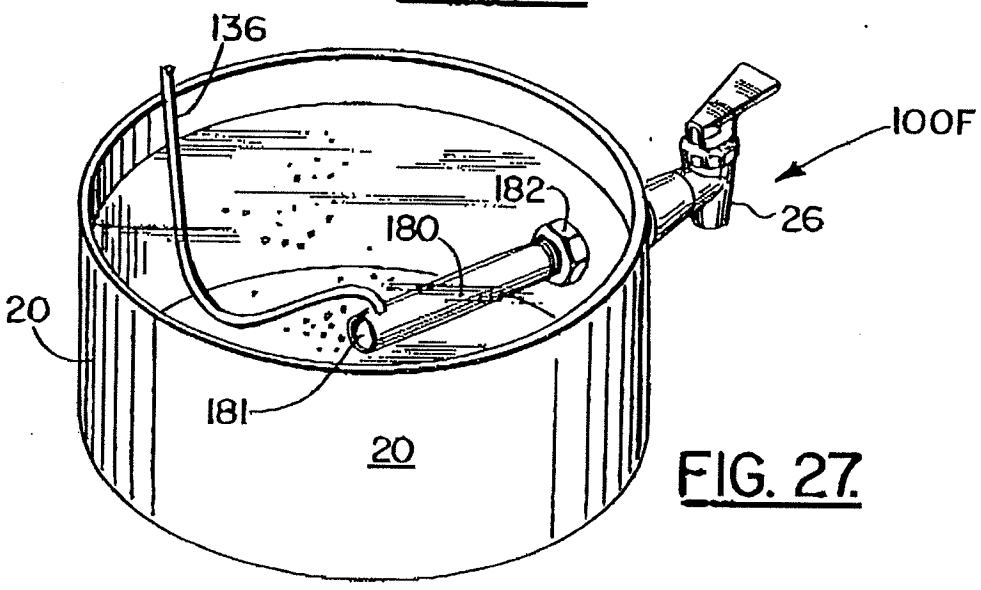


FIG. 27.

REPLACEMENT SHEET
Date : 12 APR 2004



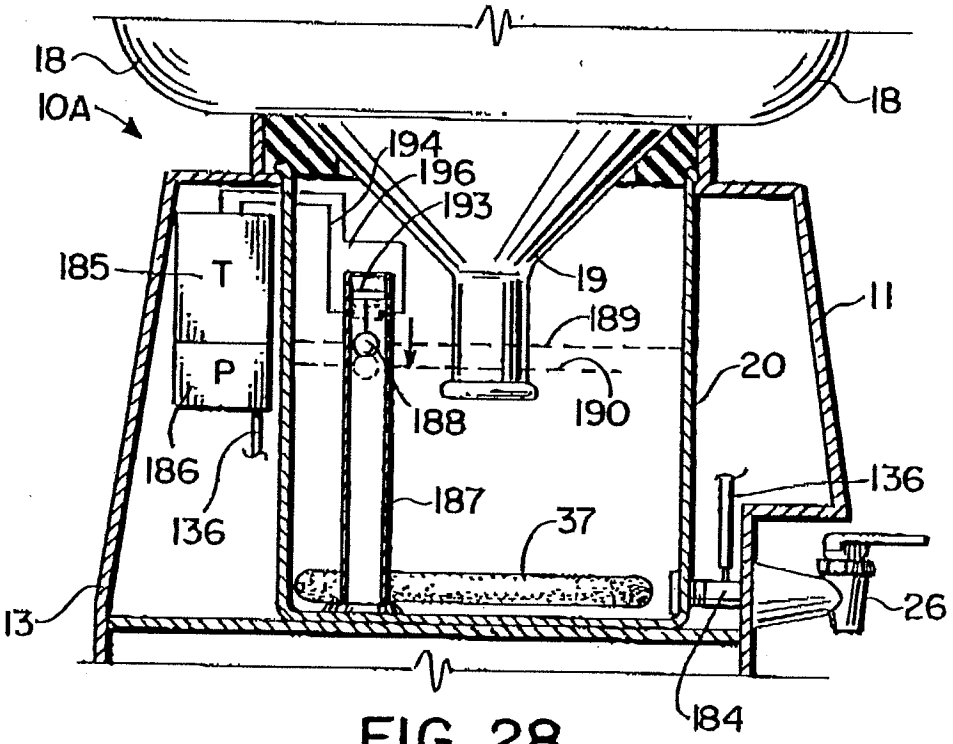


FIG. 28.

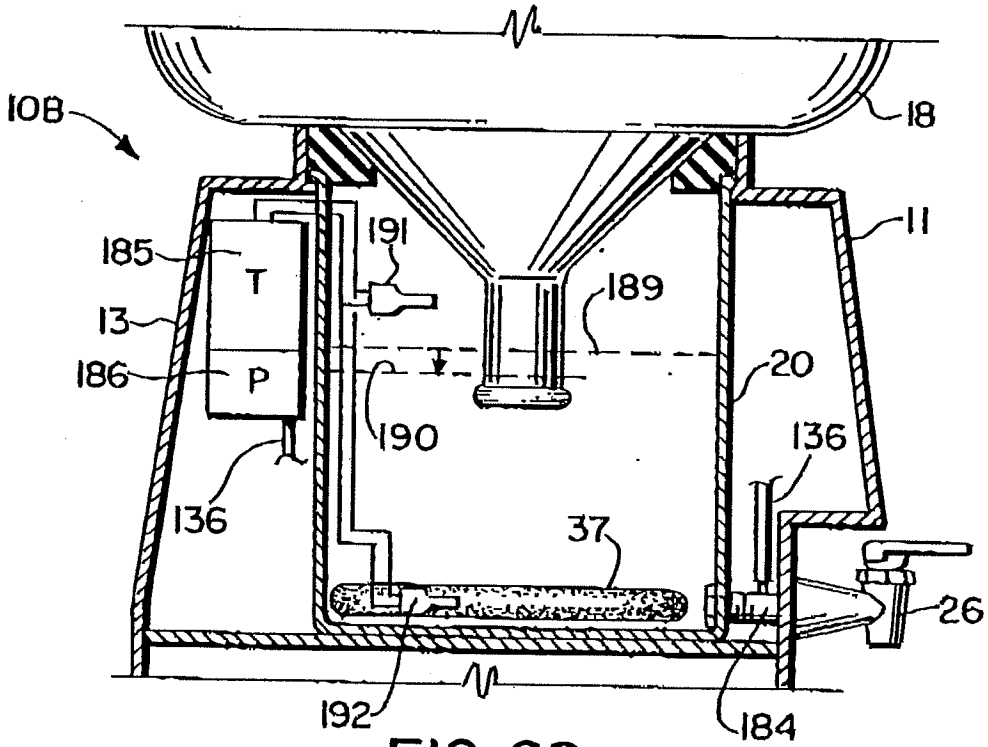


FIG. 29.

REPLACEMENT SHEET
Date : 12 APR 2004



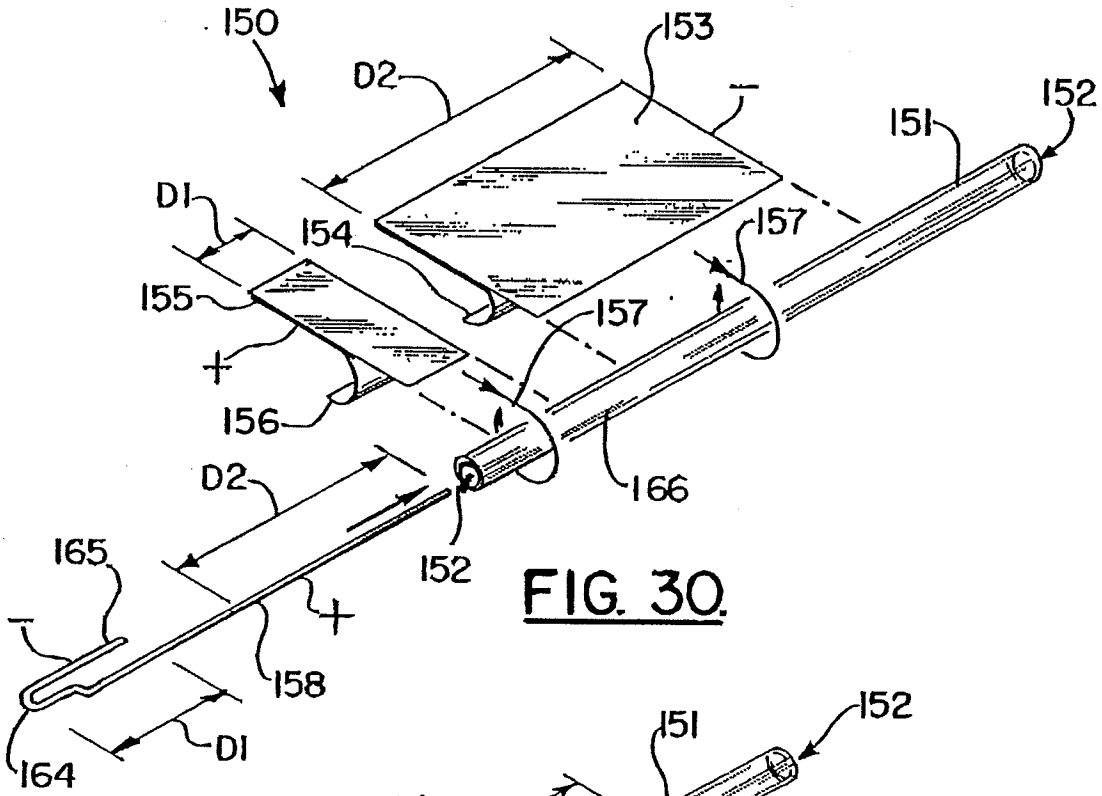


FIG. 30.

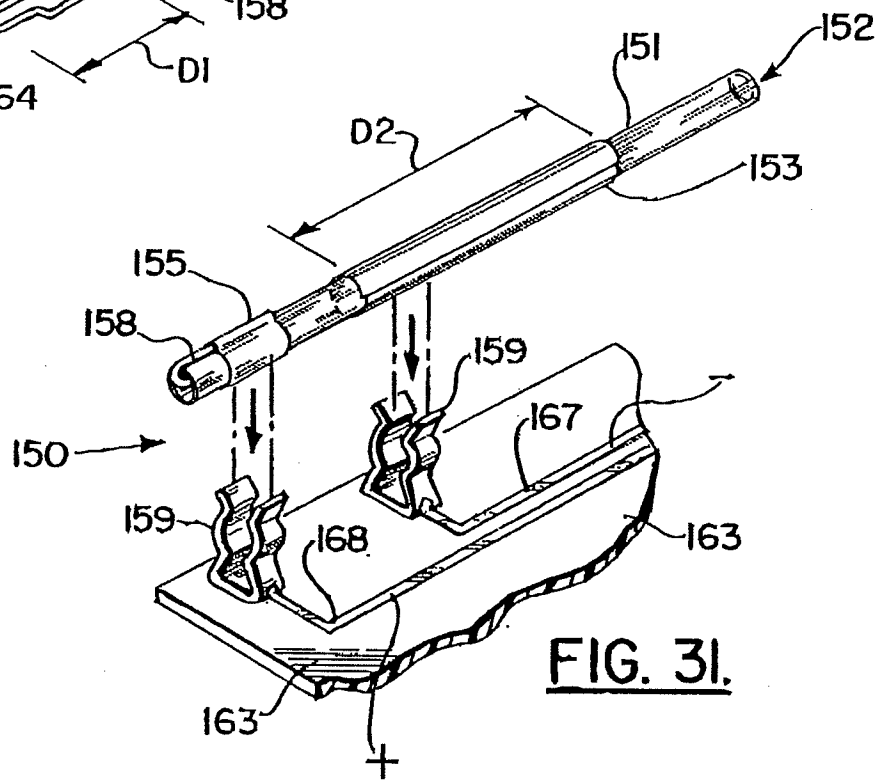


FIG. 31.

REPLACEMENT SHEET
Date : 12 APR 2004



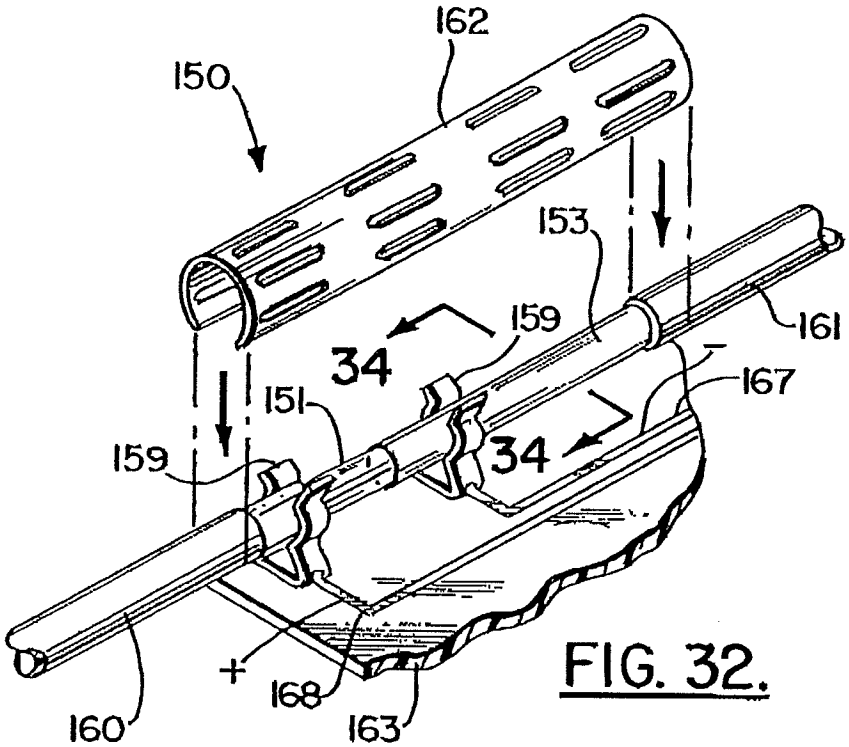


FIG. 32.

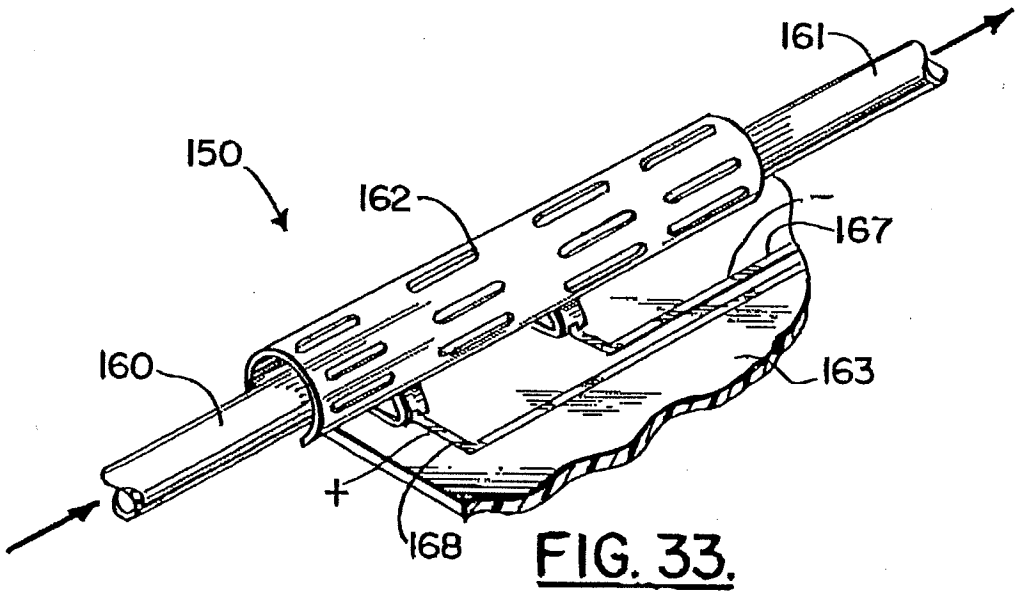


FIG. 33.

REPLACEMENT SHEET
Date : 12 APR 2004



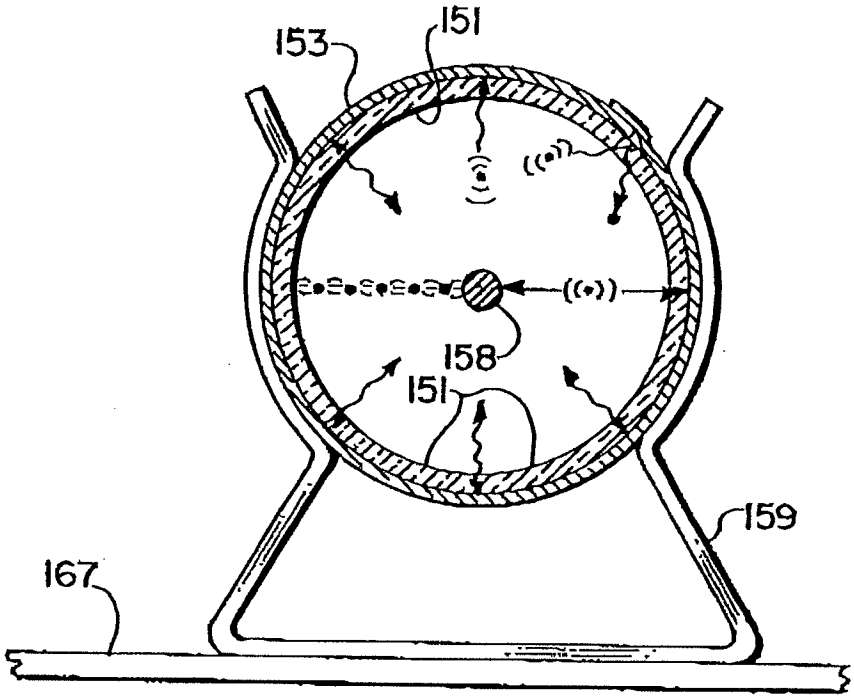


FIG. 34.

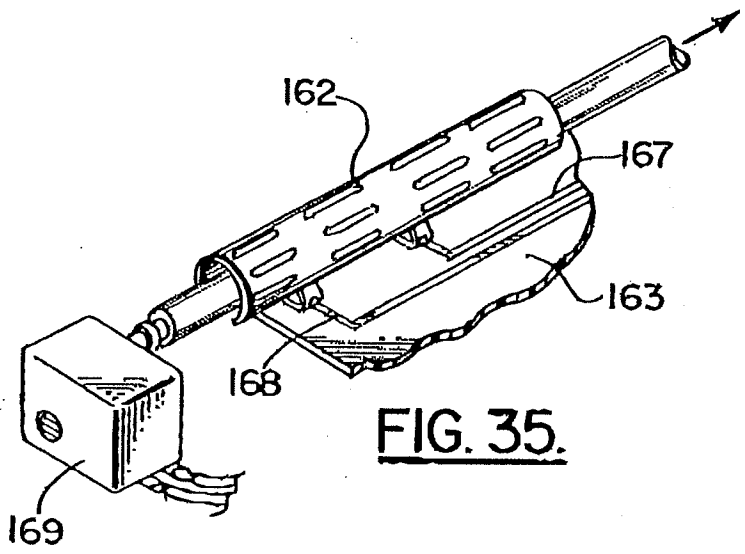


FIG. 35.

REPLACEMENT SHEET
12 APR 2004
Date :.....



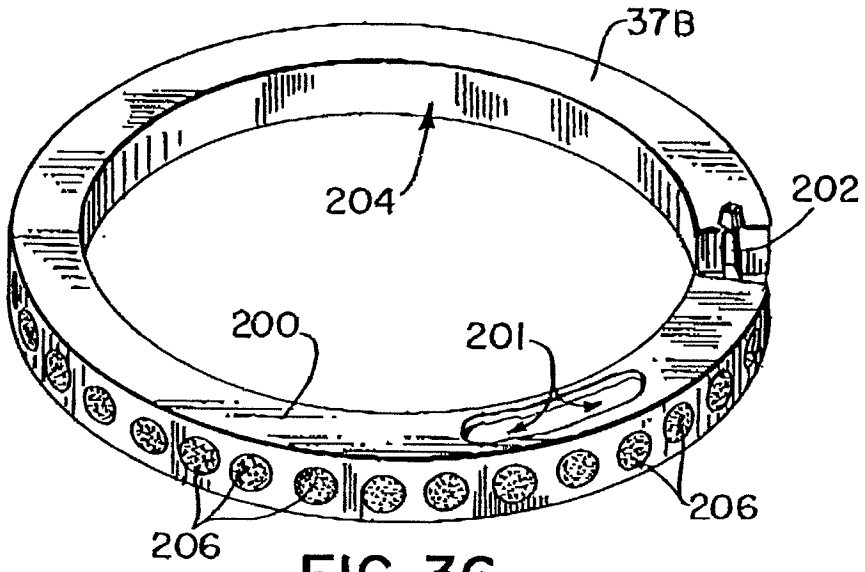


FIG. 36.

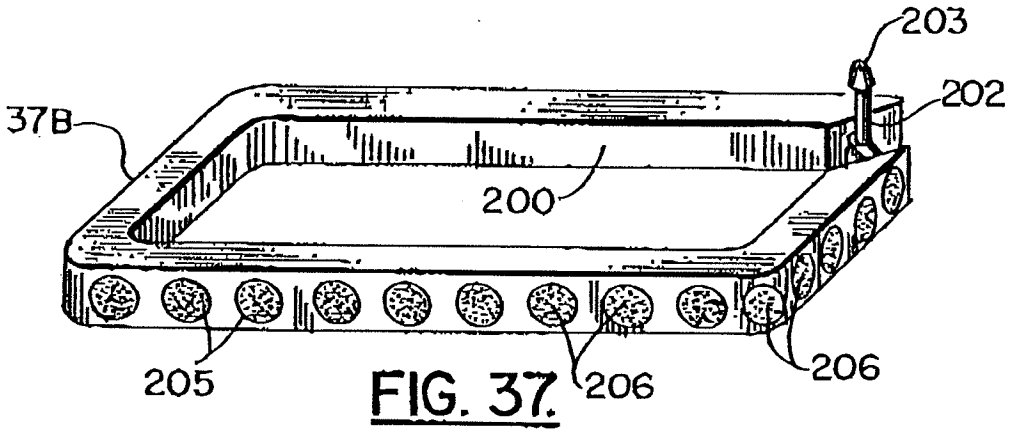


FIG. 37.

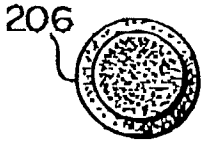


FIG. 37A.




FIG. 37D.

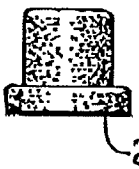


FIG. 37B.

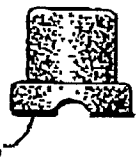


FIG. 37E.

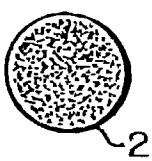


FIG. 37C.




FIG. 37F.

REPLACEMENT SHEET
Date : 12 APR 2004



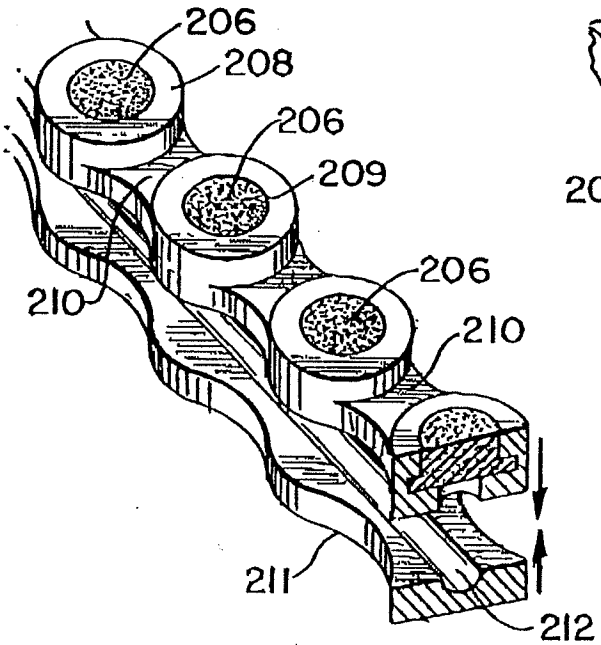


FIG. 38.

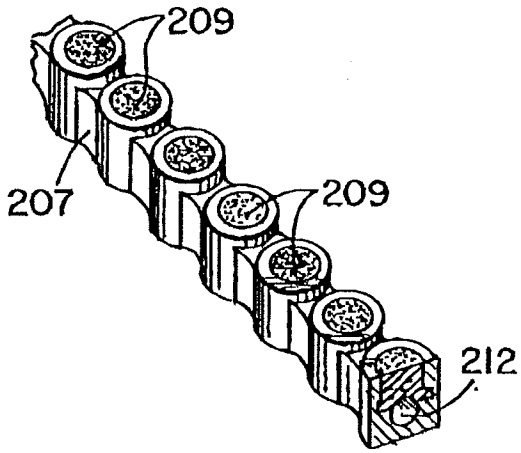


FIG. 39.

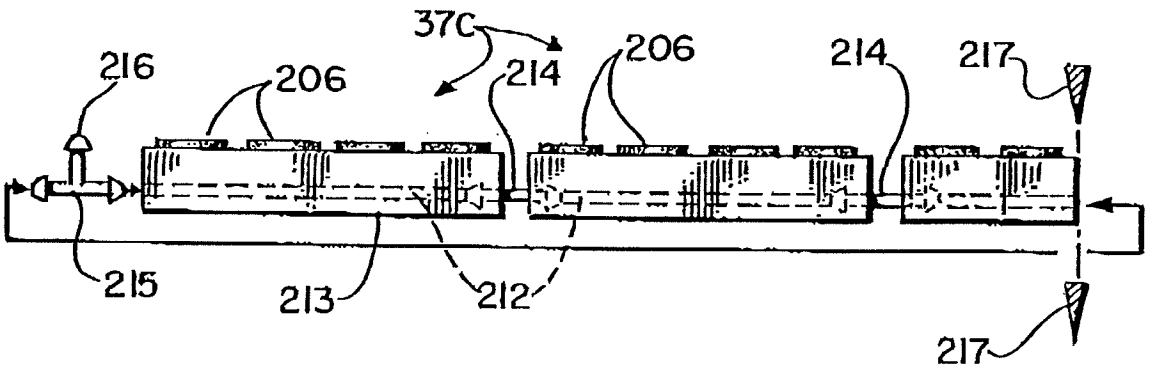


FIG. 40.

REPLACEMENT SHEET
Date : 12 APR 2004



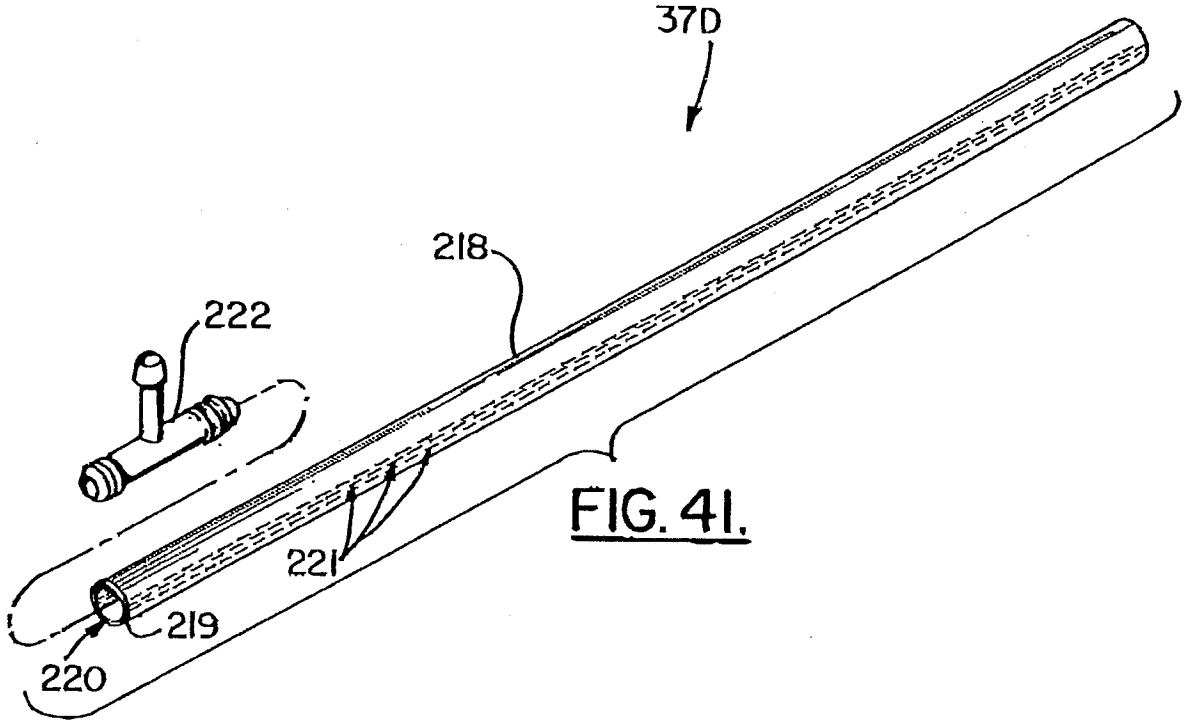


FIG. 41.

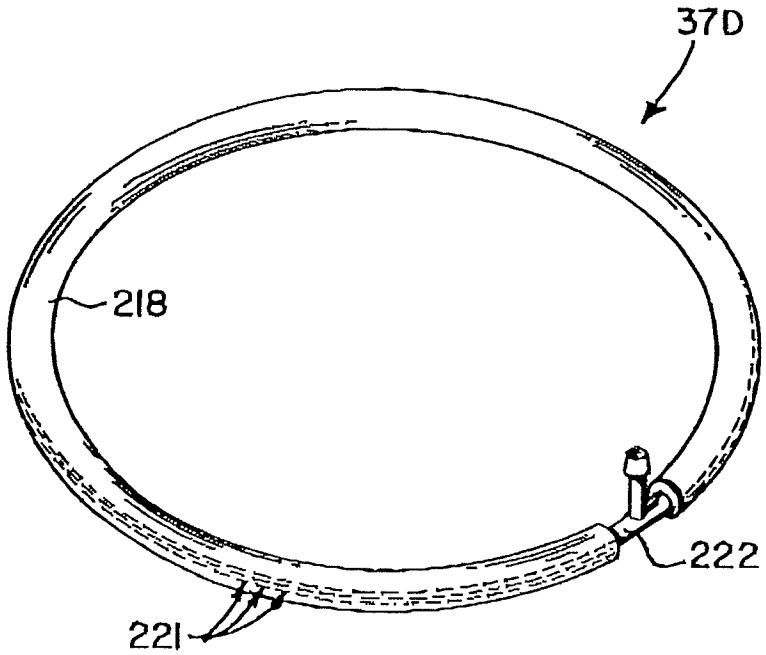


FIG. 42.

REPLACEMENT SHEET
Date : 12 APR 2004



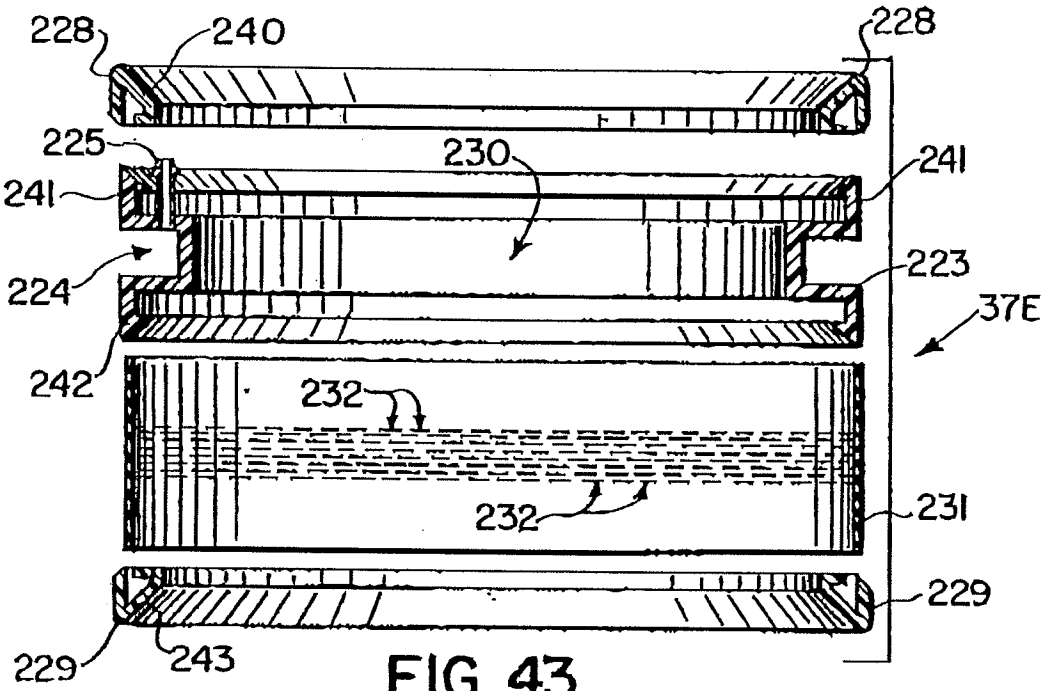


FIG. 43.

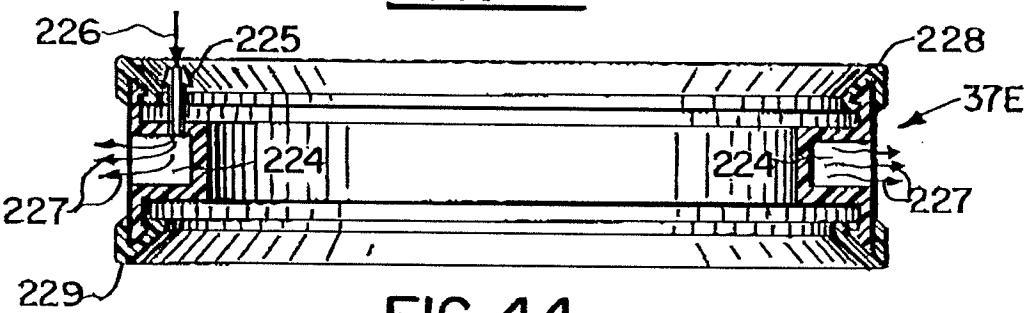


FIG. 44.

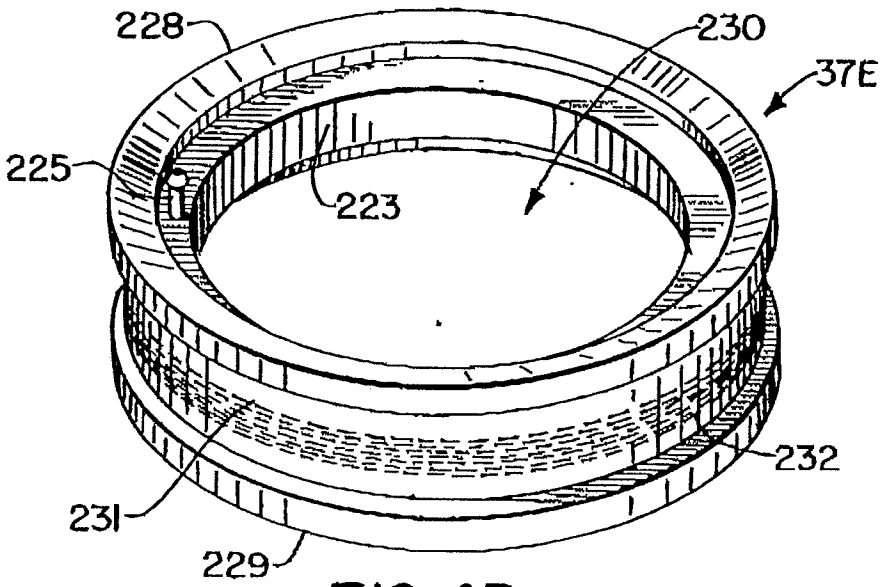


FIG. 45.

REPLACEMENT SHEET
Date : 12 APR 2004



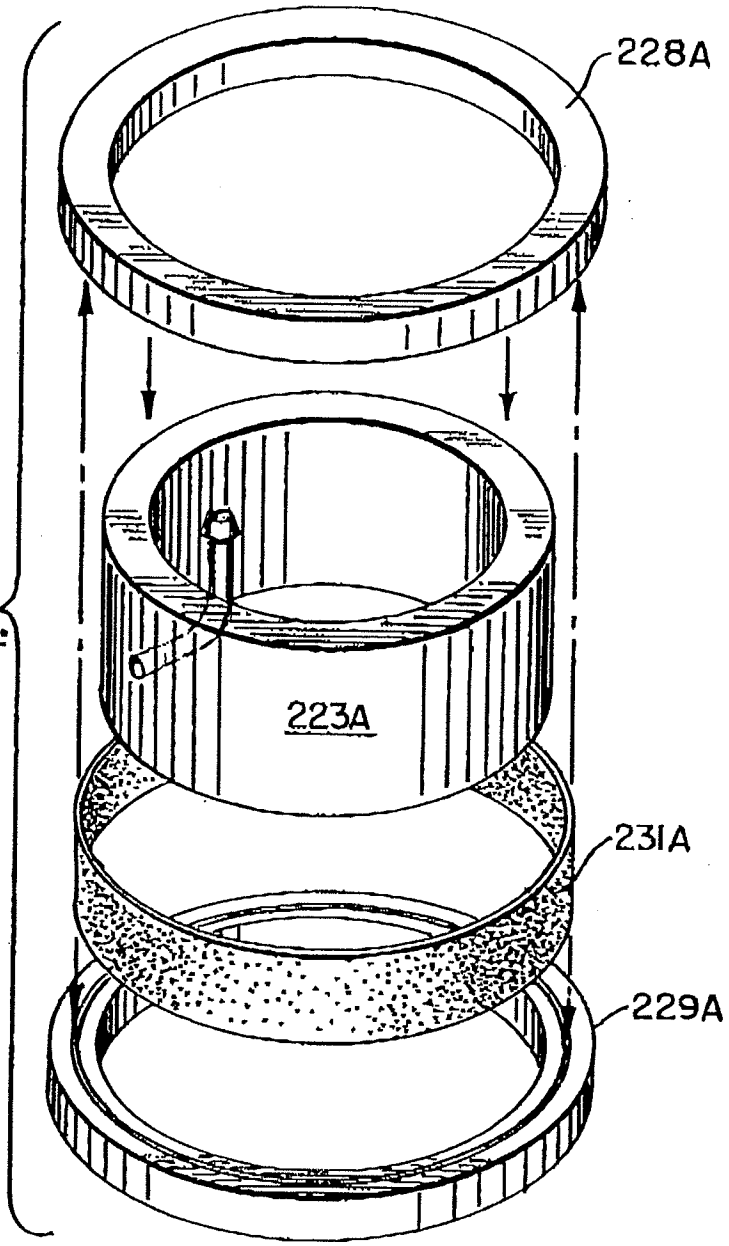


FIG.43A.

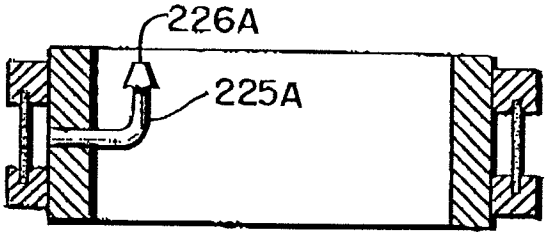


FIG.44A.

REPLACEMENT SHEET
Date : 12 APR 2004



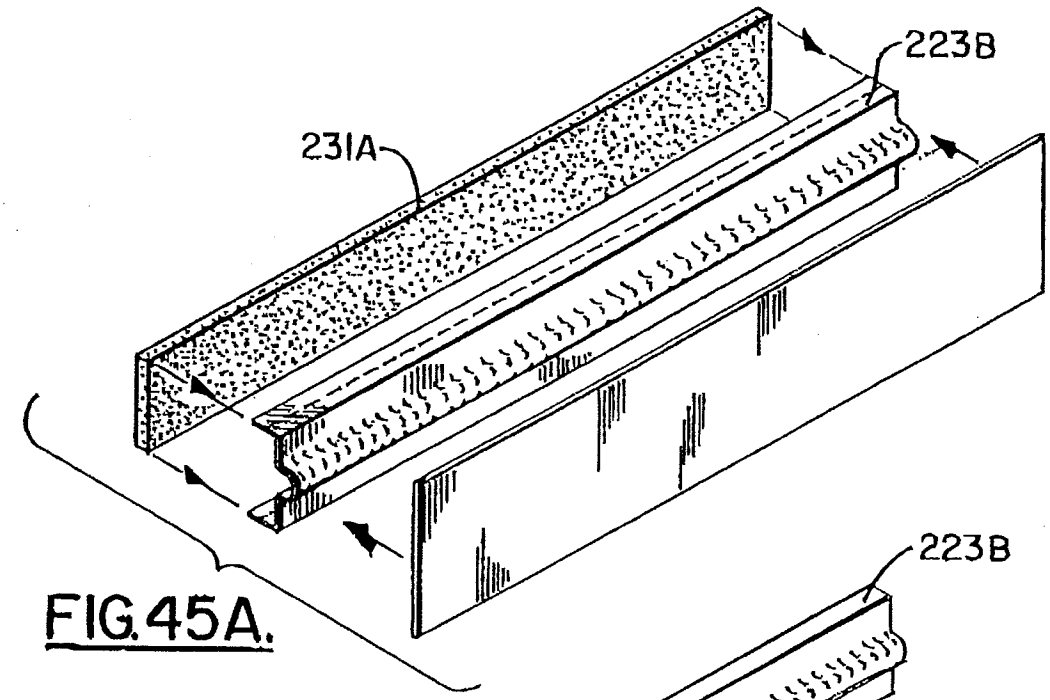


FIG.45A.

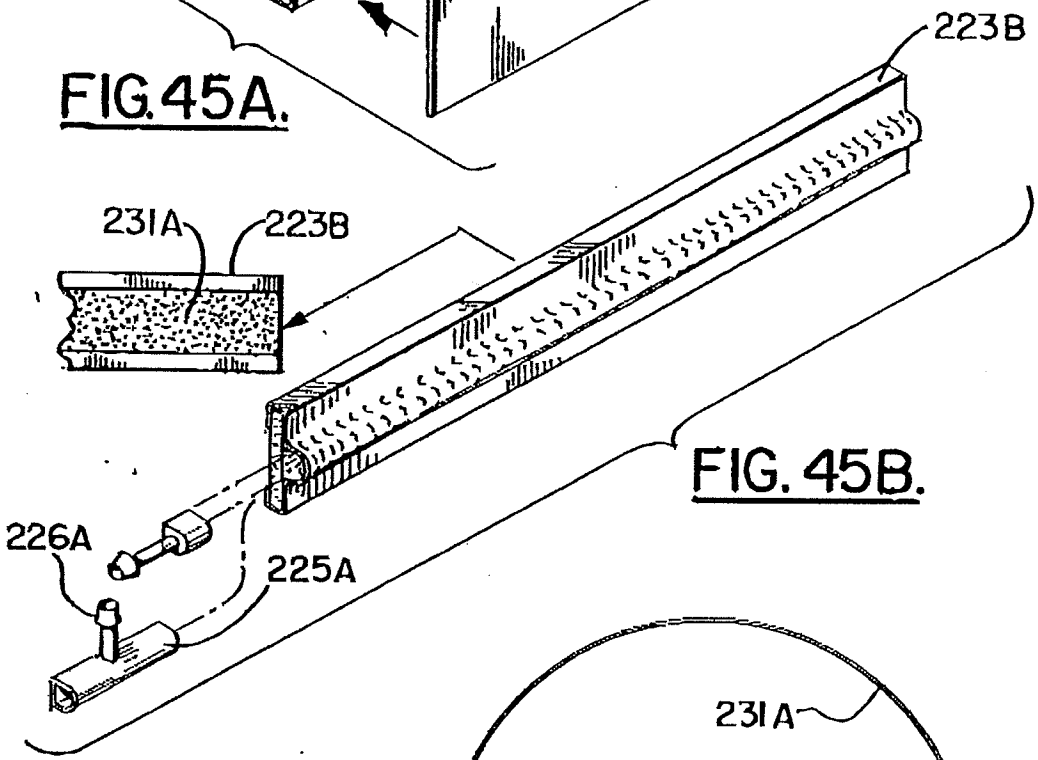


FIG. 45B.

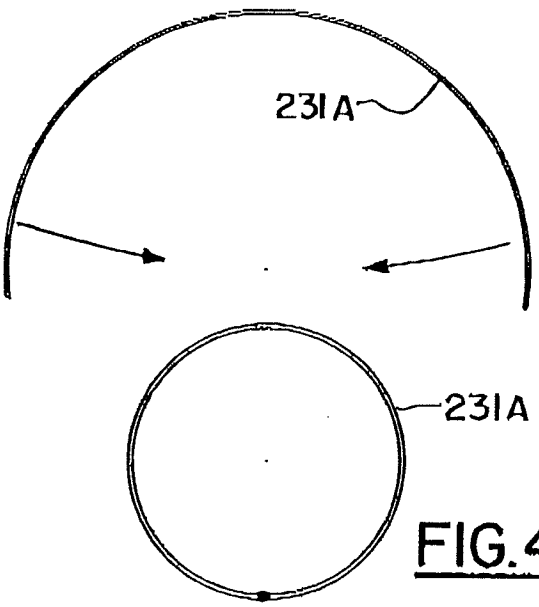


FIG.45C.

REPLACEMENT SHEET
Date : 12 APR 2004



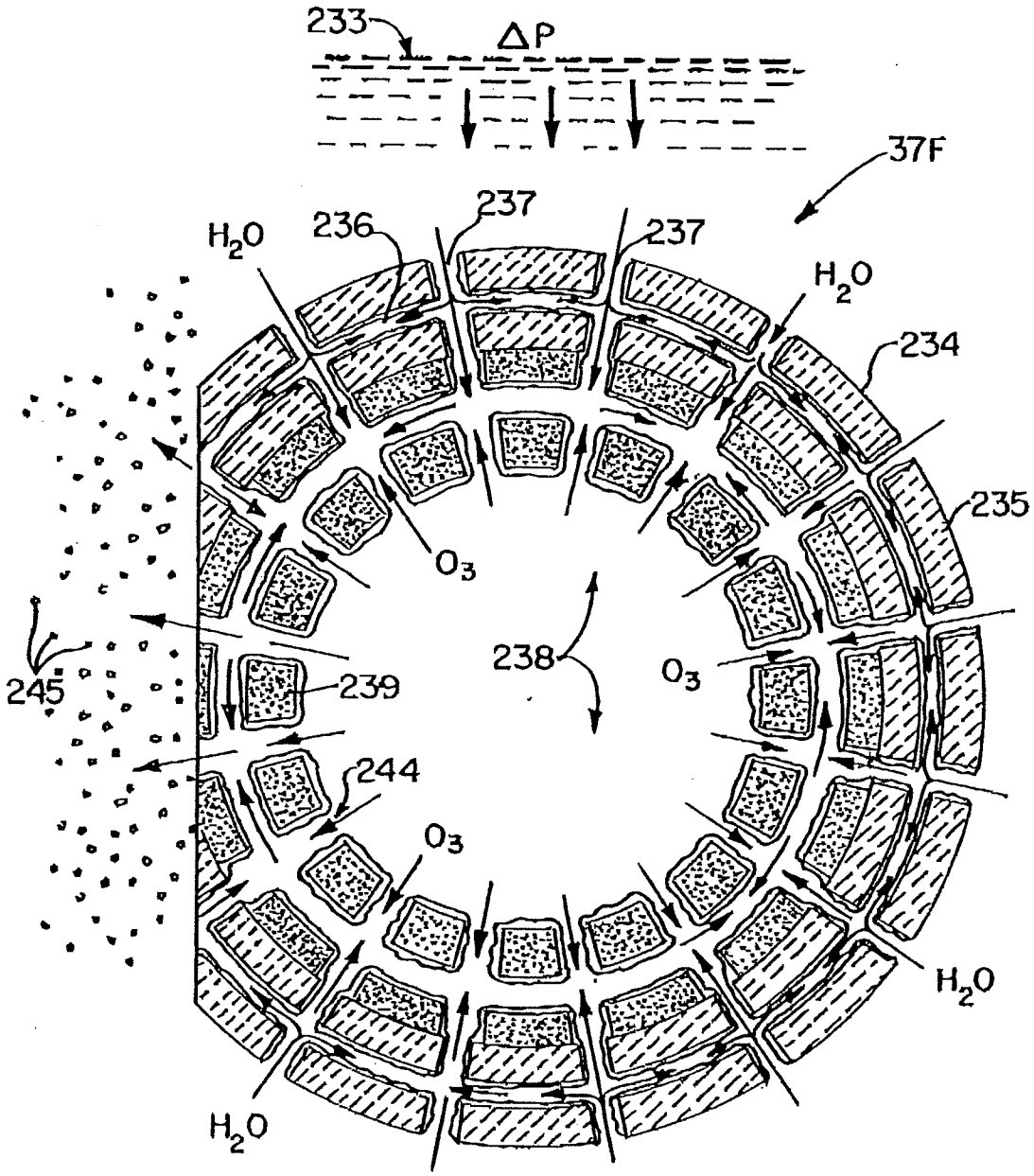


FIG. 46.

REPLACEMENT SHEET
Date : 12 APR 2004



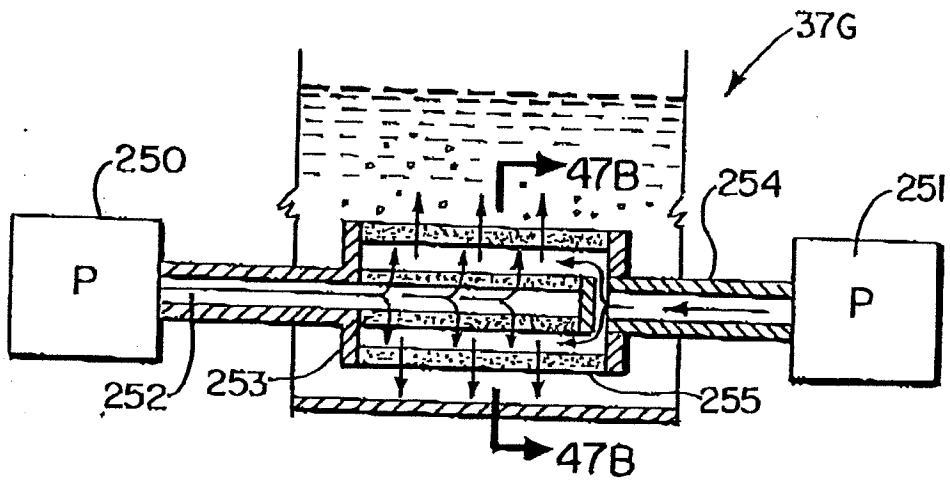


FIG. 47A.

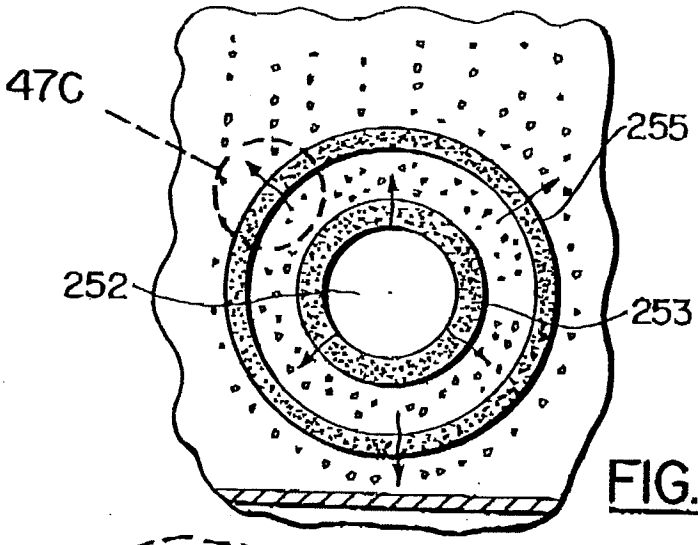


FIG. 47B.

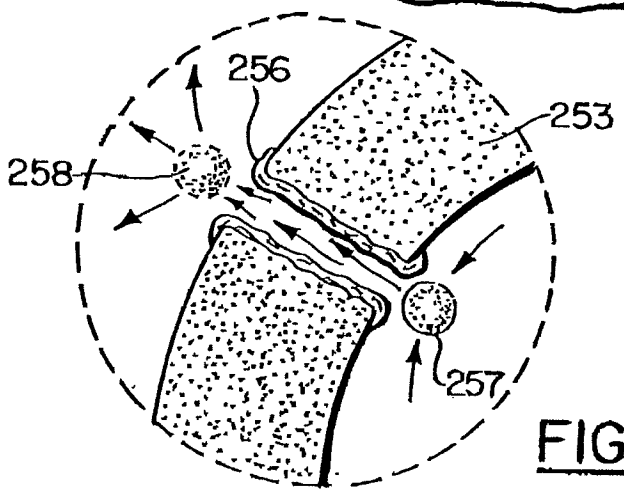


FIG. 47C.

REPLACEMENT SHEET
Date : 12 APR 2004



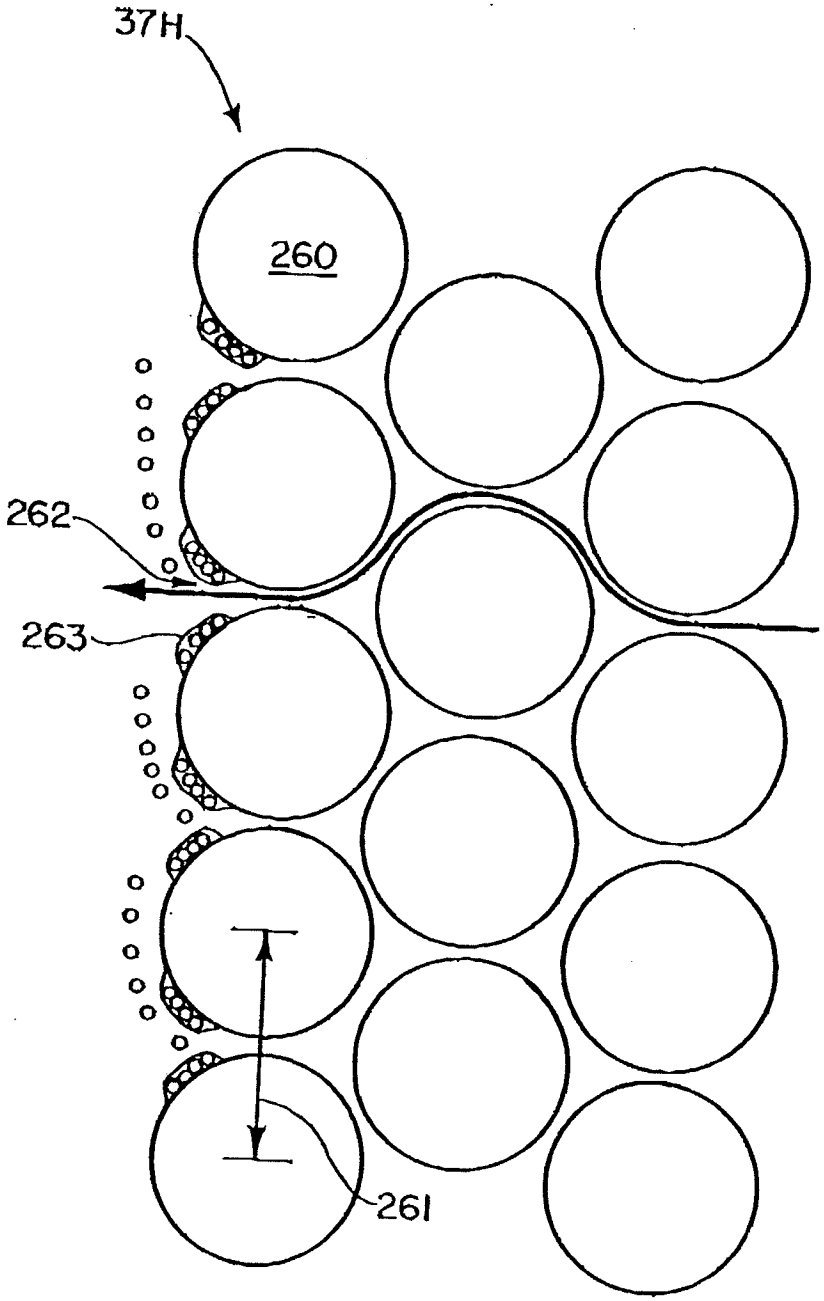


FIG. 48.

REPLACEMENT SHEET
Date : 12 APR 2004



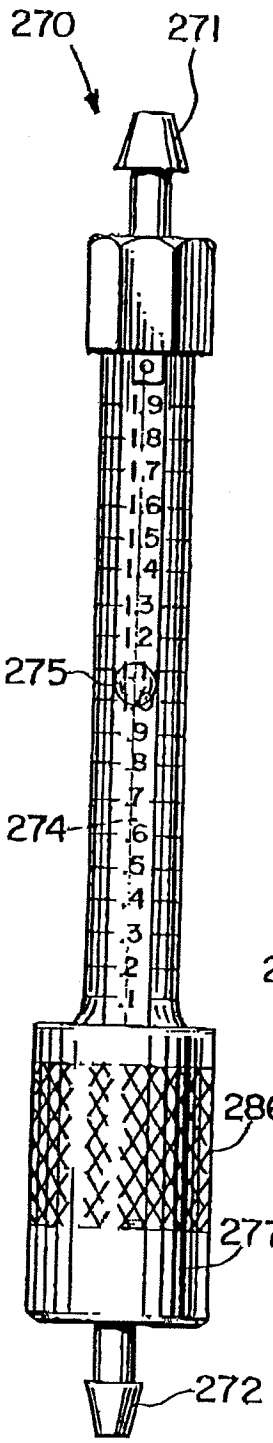


FIG. 49.

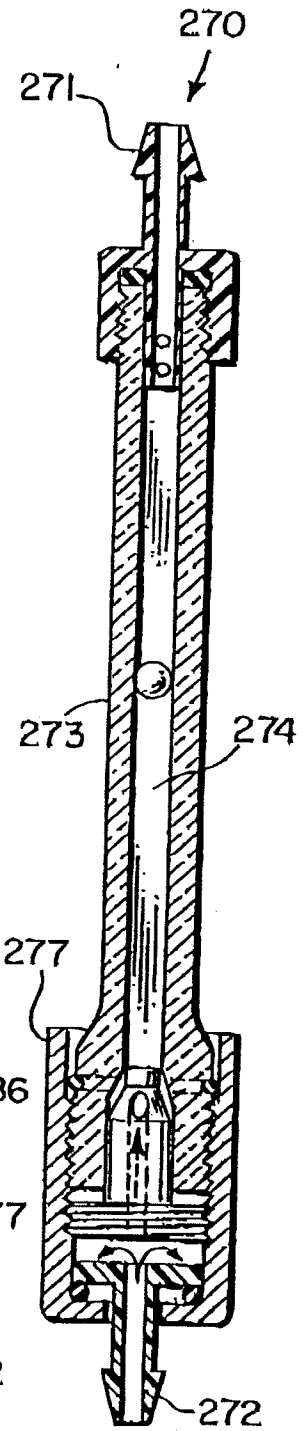


FIG. 50.

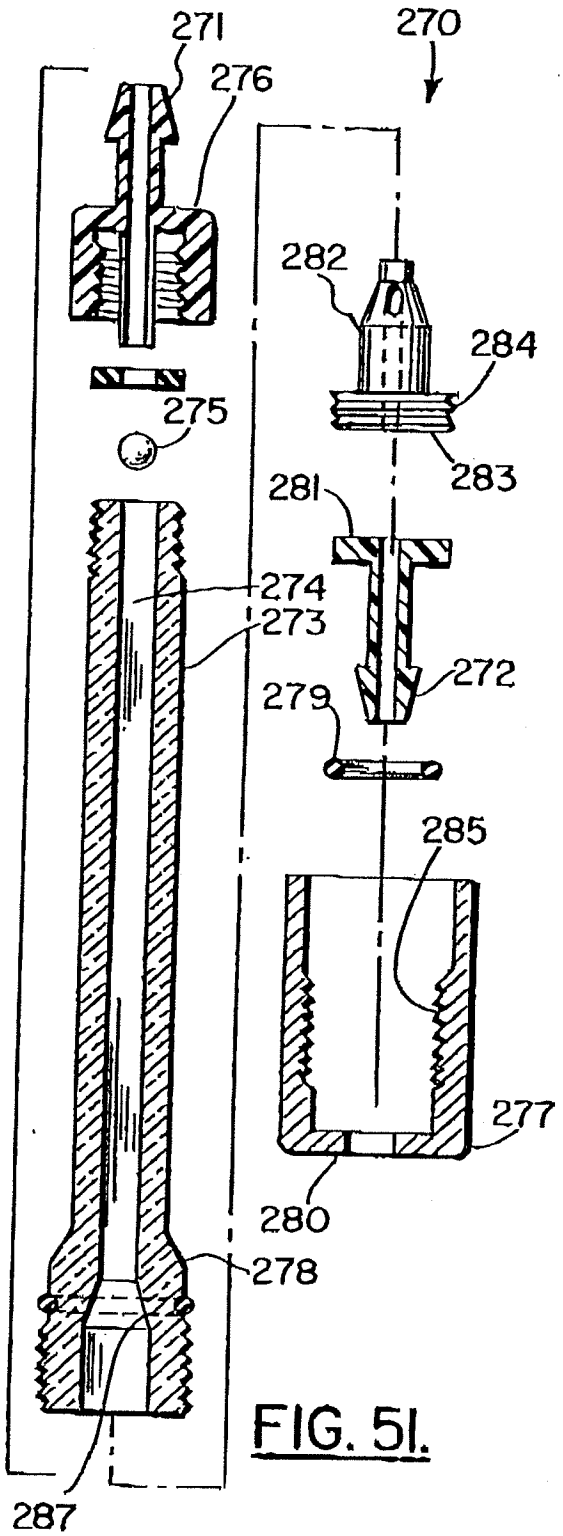


FIG. 51.

REPLACEMENT SHEET
Date : 12 APR 2004



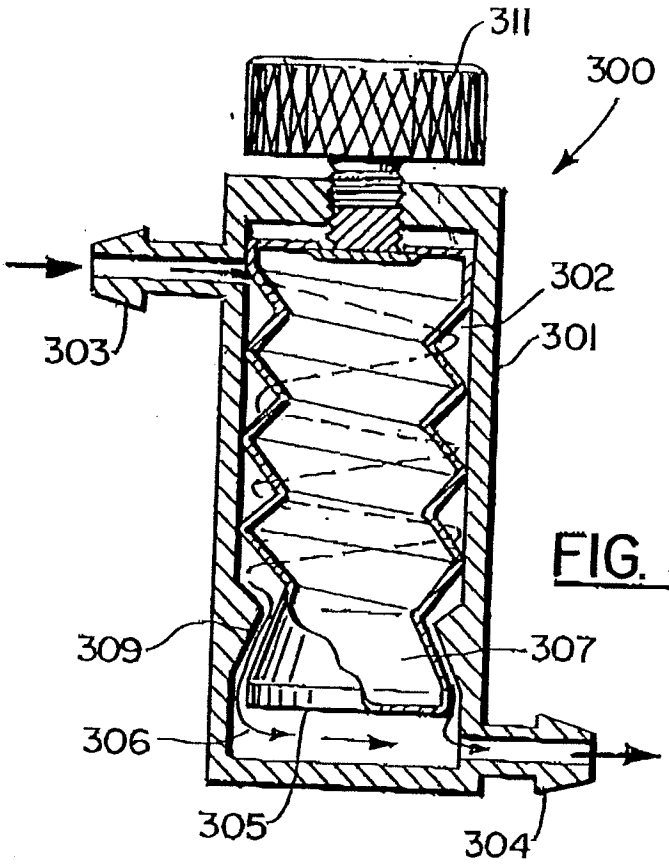


FIG. 52.

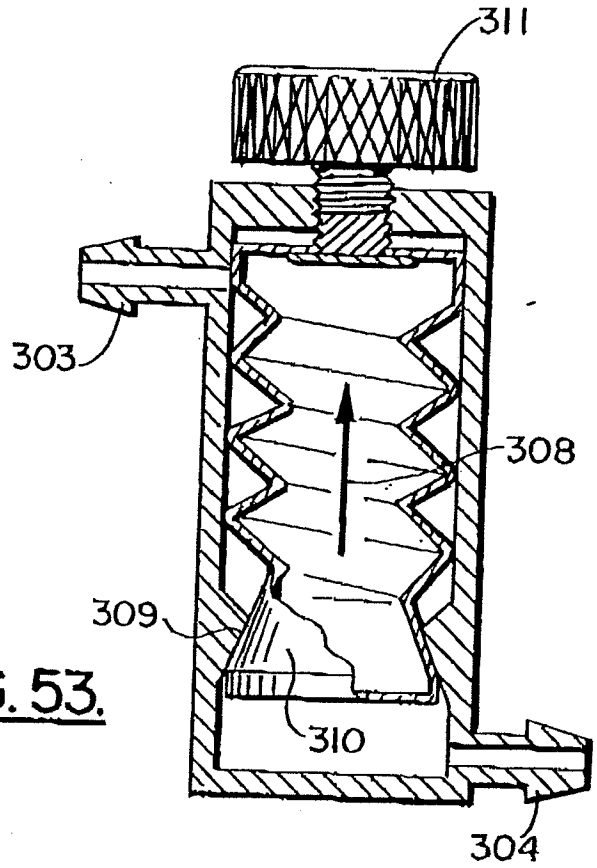


FIG. 53.

REPLACEMENT SHEET
Date : 12 APR 2004



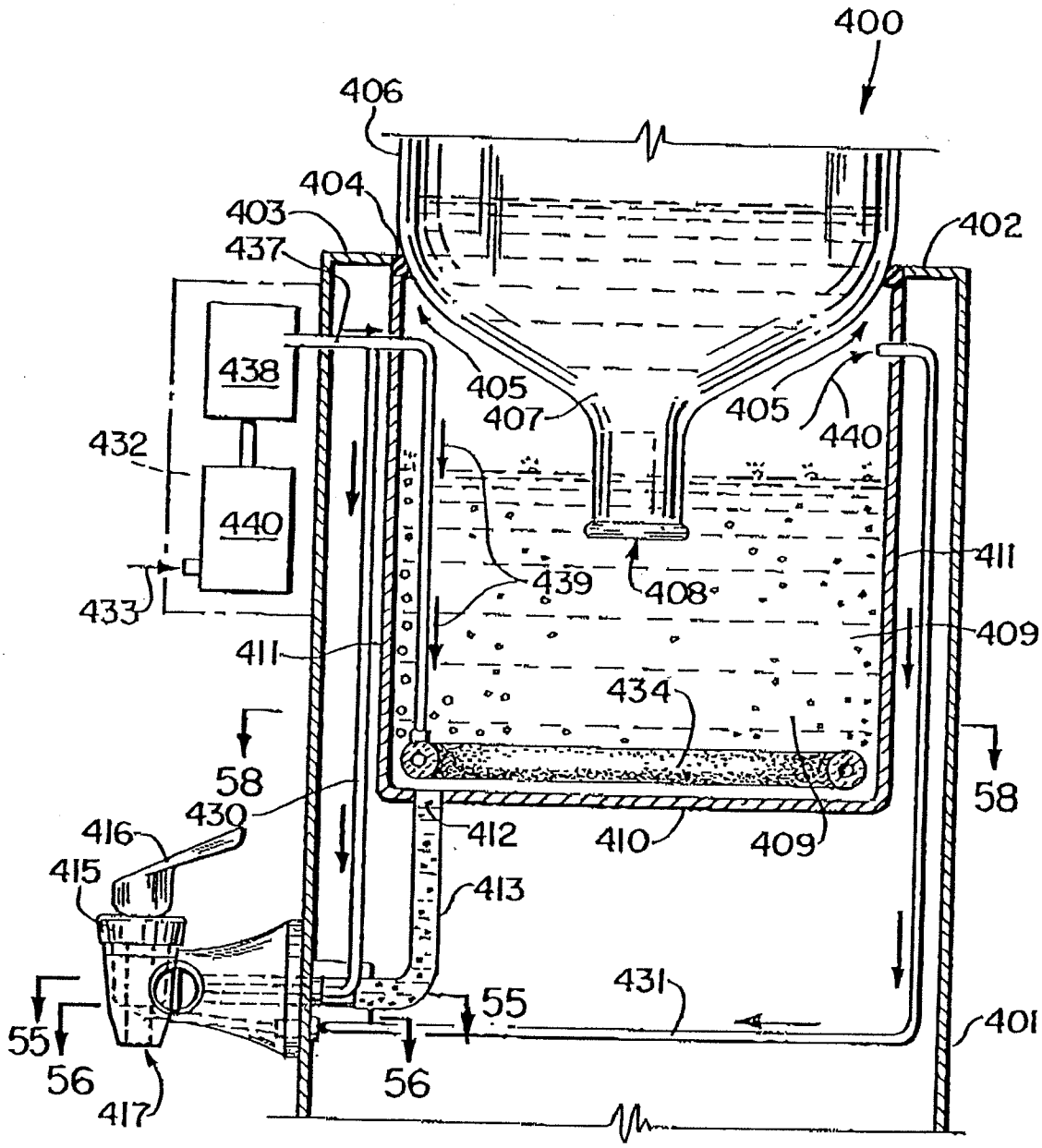


FIG. 54.

REPLACEMENT SHEET
Date : 12 APR 2004



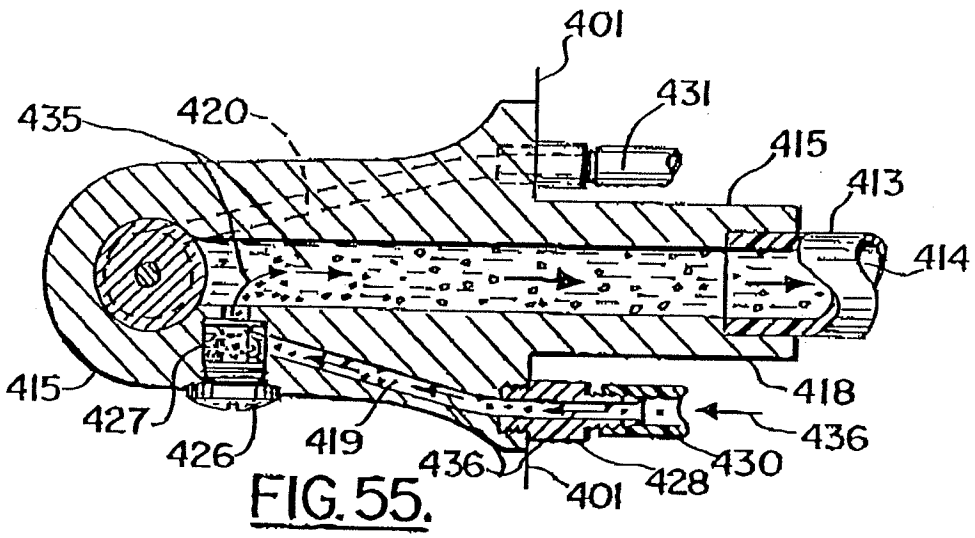


FIG. 55.

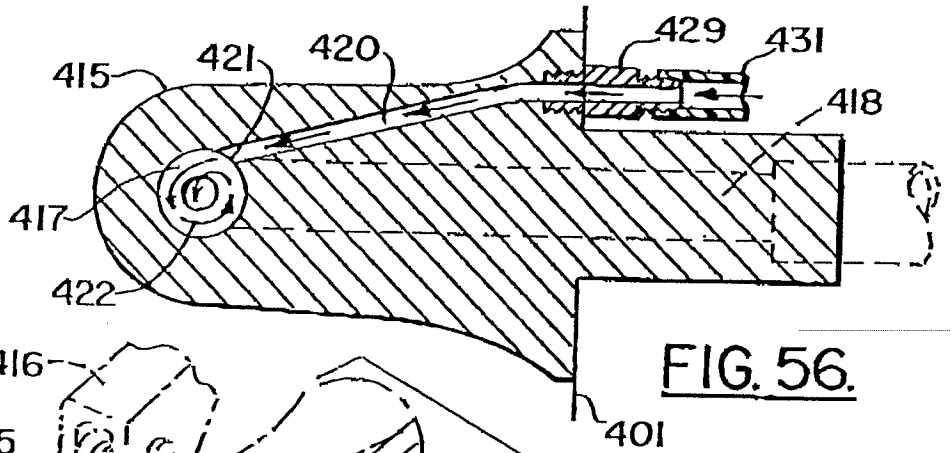


FIG. 56.

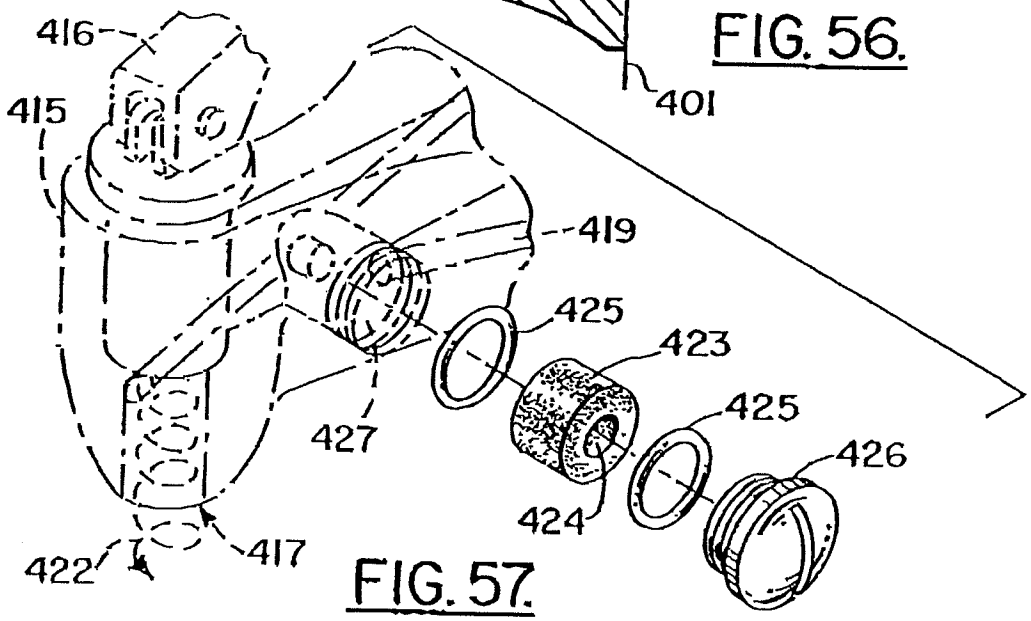


FIG. 57.

REPLACEMENT SHEET
Date : 12 APR 2004



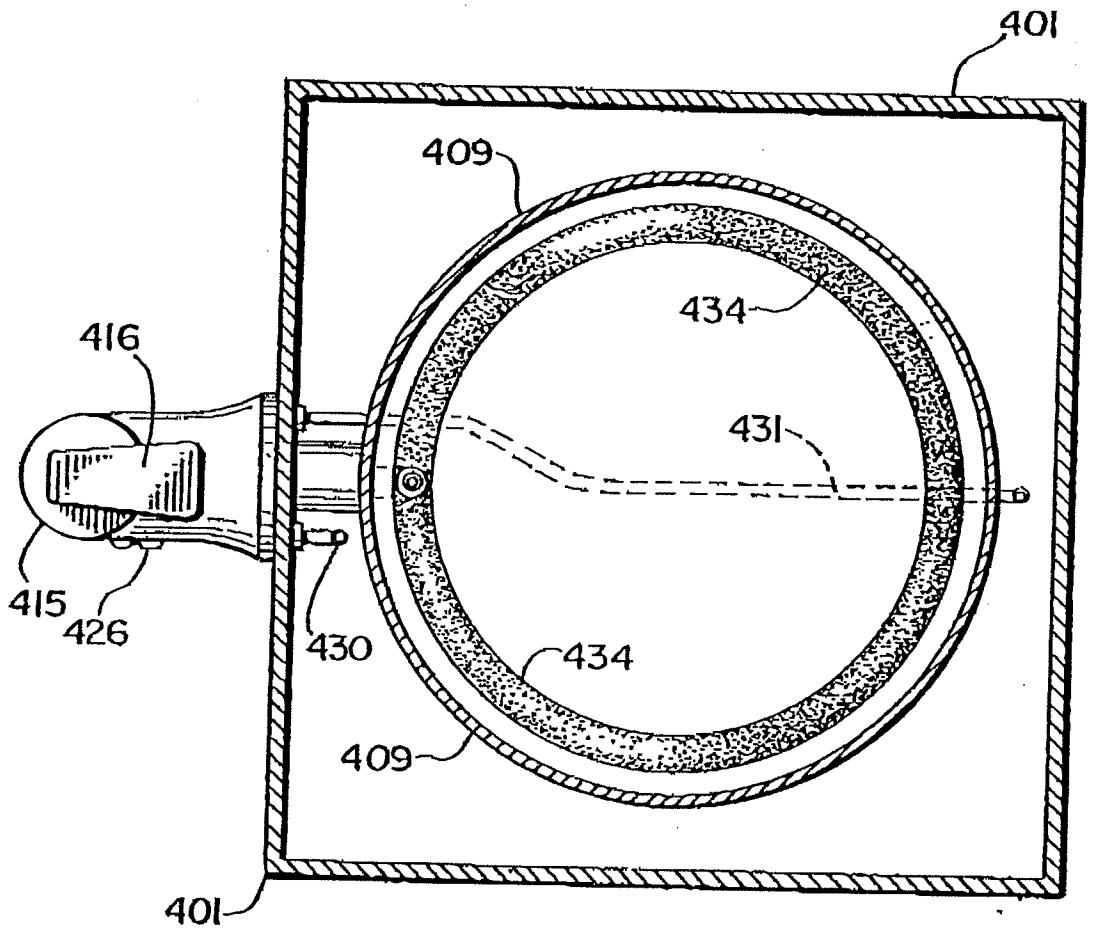


FIG. 58.

REPLACEMENT SHEET
Date : 12 APR 2004



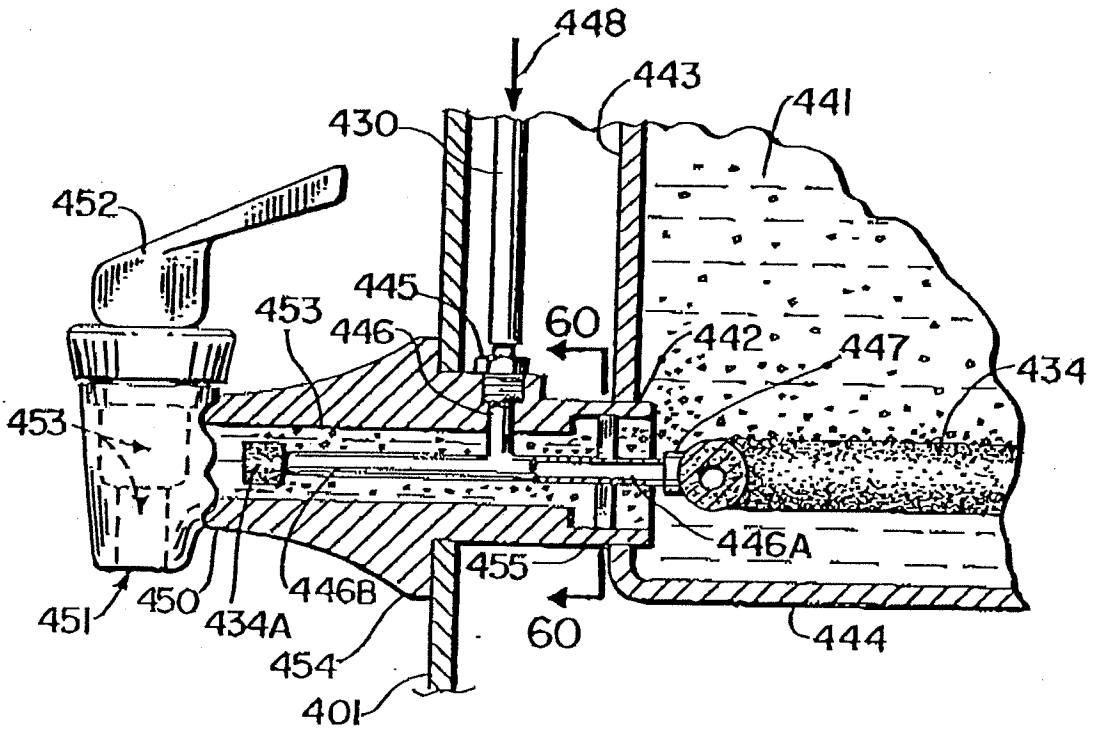


FIG. 59.

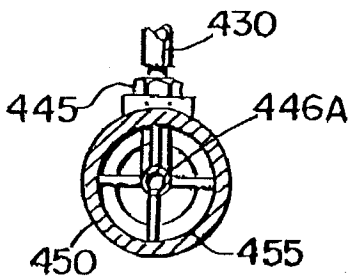


FIG. 60.

REPLACEMENT SHEET
Date : 12 APR 2004



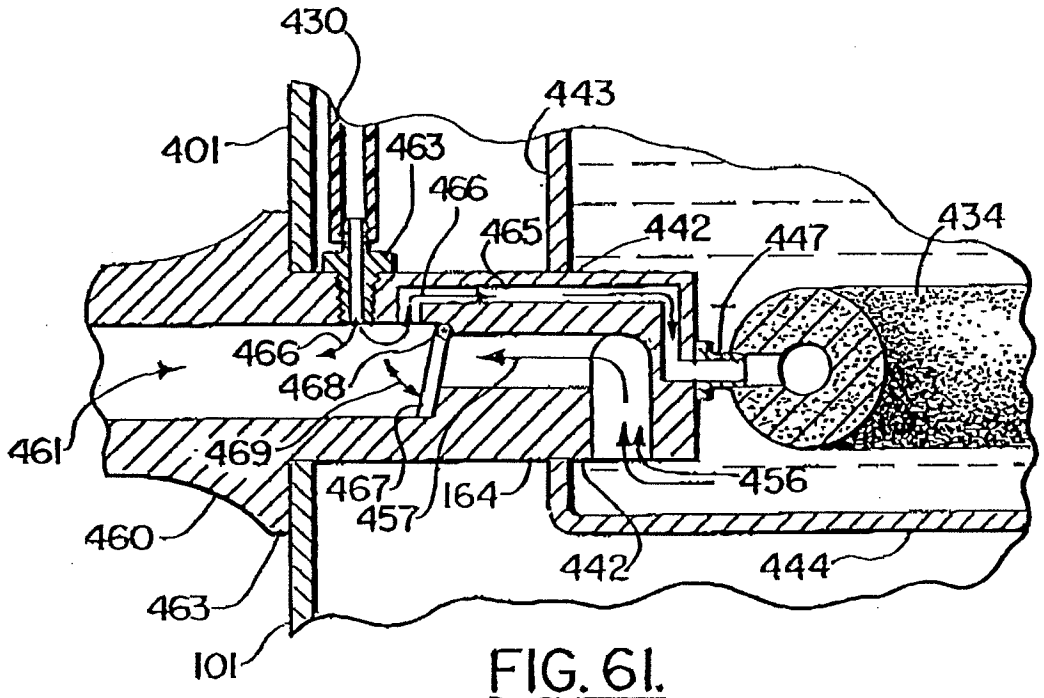


FIG. 61.

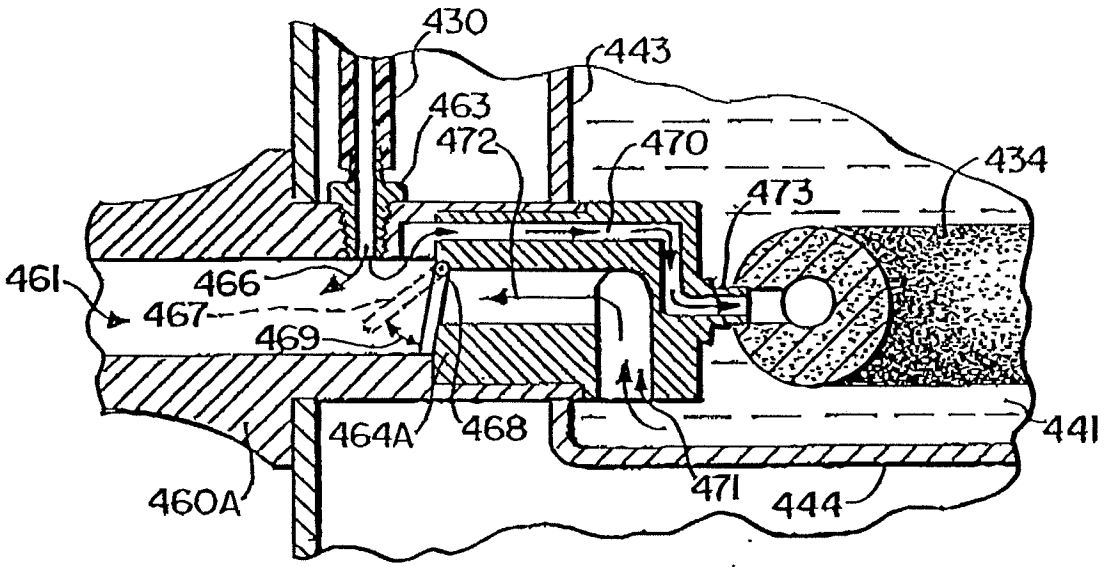


FIG. 62.