FIG. 1

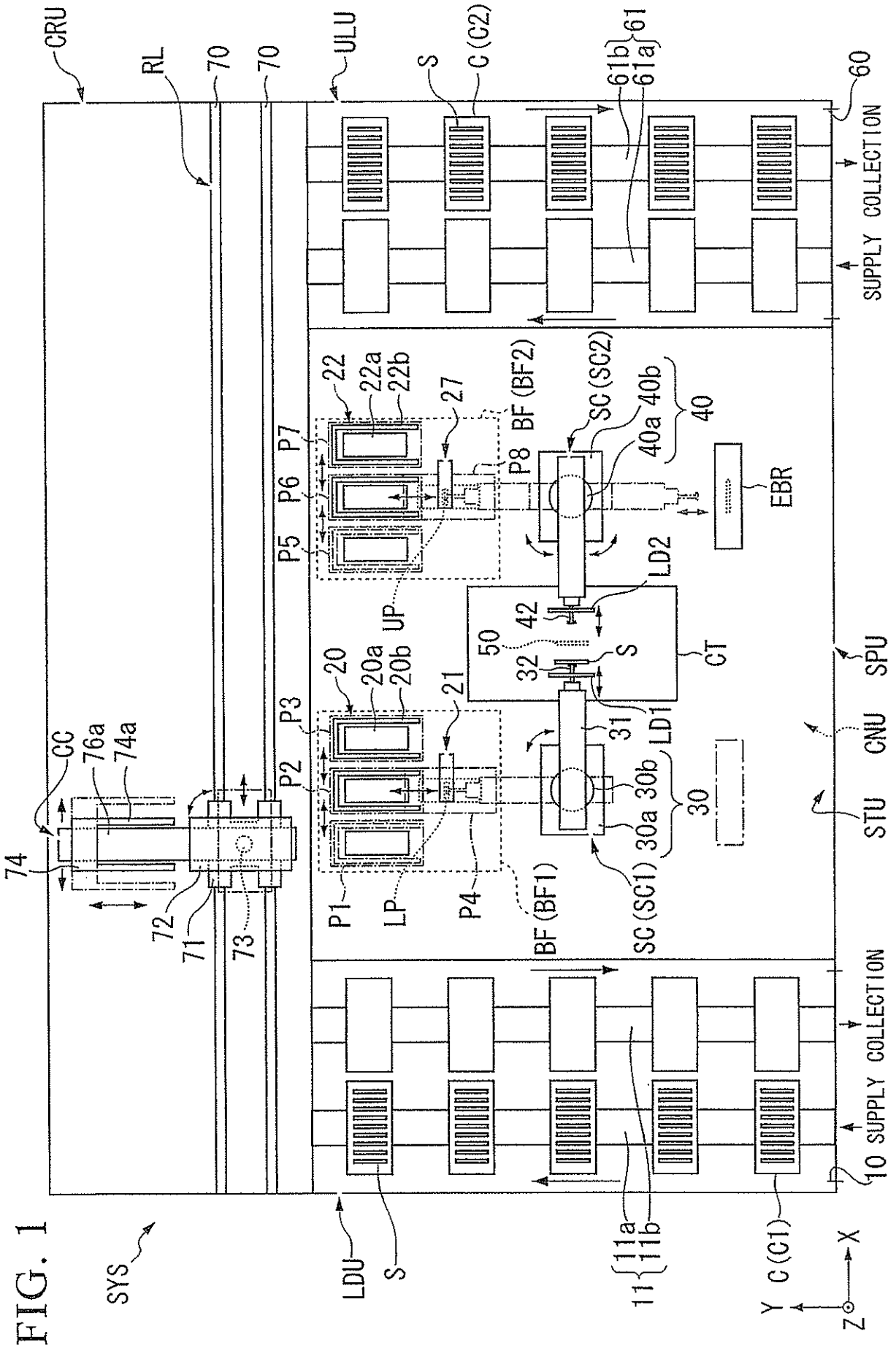
CRU
RL
70
70
ULU
S
C (C2)
61b
61a
61
60
SUPPLY COLLECTION
22
22a
22b
27
BF (BF2)
SC (SC2)
40b
40a
40
P5
P6
P7
P8
EBR
LD2
UP
42
50
32
S
CT
SPU
20
20a
20b
21
P3
P2
31
LD1
CNU
CC
76a
74a
74
30b
30a
30
STU
72
71
73
P1
LP
P4
BF (BF1)
SC (SC1)
10 SUPPLY COLLECTION
LDU
S
11a
11b
11
C (C1)
SYS
Y
X
Z

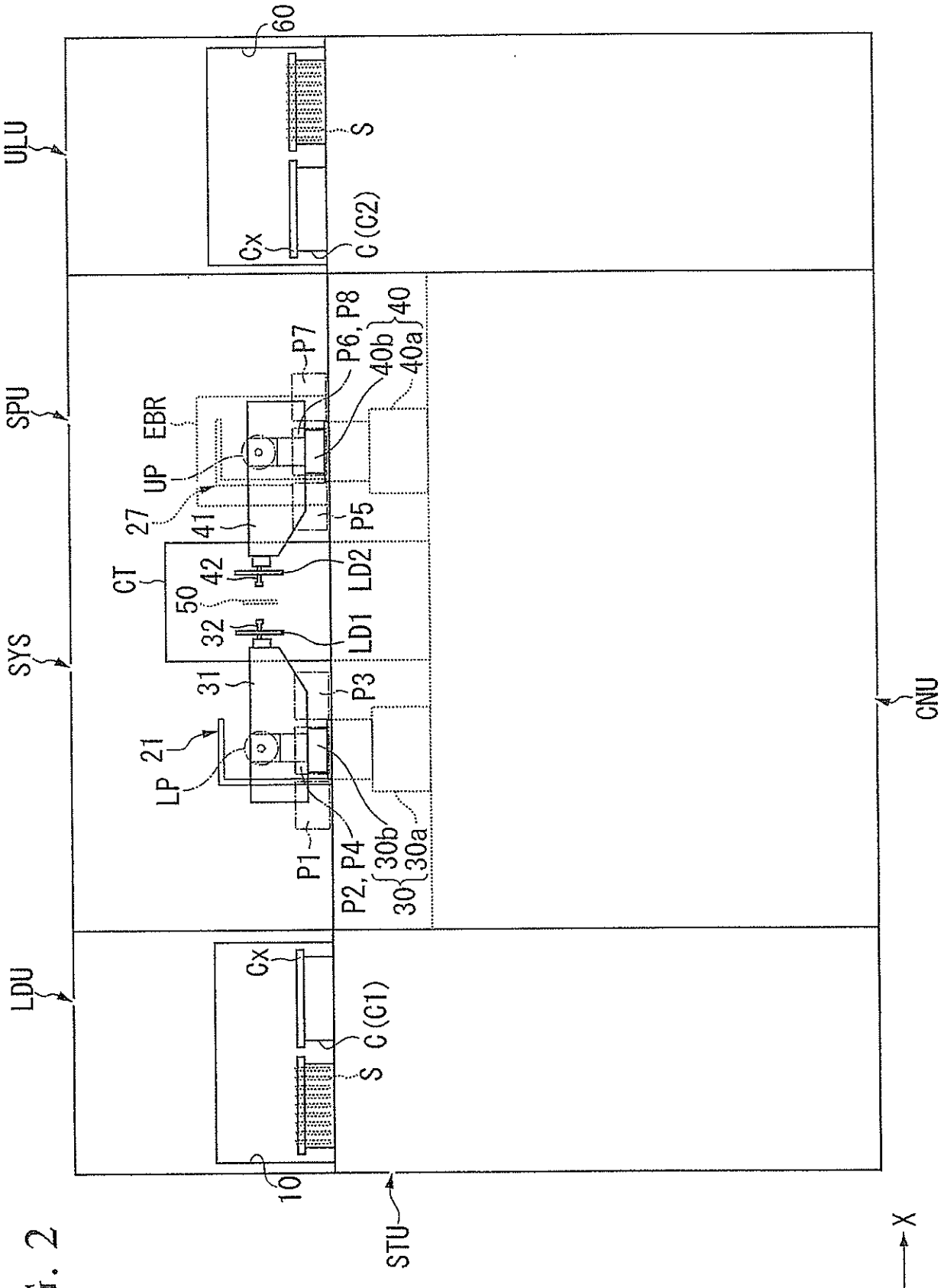
ULU
SPU
SYS
LDU
CNU
60
S
Cx
C (C2)
P7
P6, P8
40
40b
40a
EBR
UP
27
41
P5
CT
42
LD2
50
32
LD1
31
P3
LP
21
P1
P2, P4
30
30b
30a
C (C1)
10
STU
Z
X
Y

FIG. 2

FIG. 3

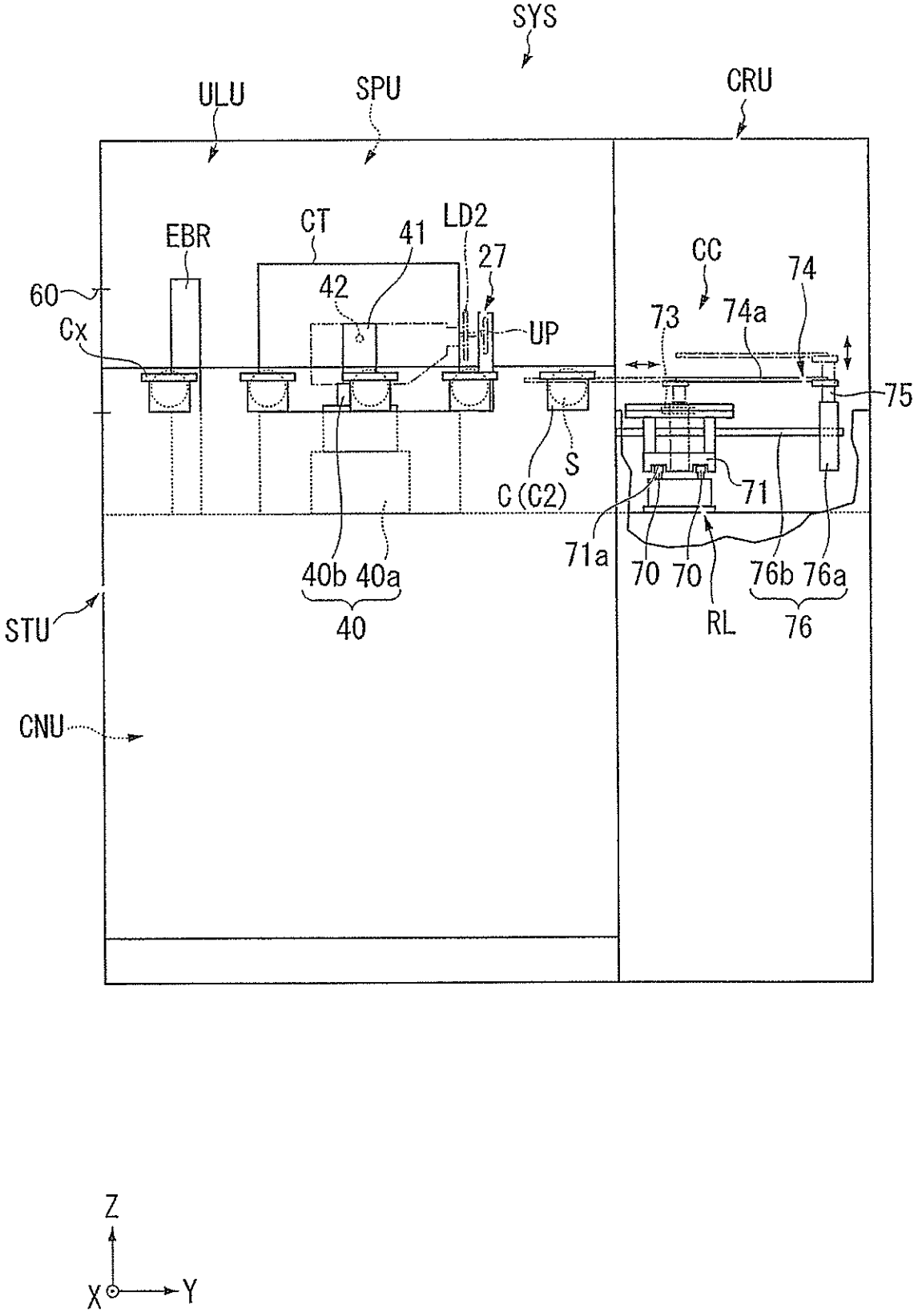
SYS
ULU
SPU
CRU
EBR
CT
41
LD2
27
42
60
Cx
UP
CC
74
73
74a
75
S
C(C2)
71
71a
70
70
40b
40a
40
RL
76b
76a
76
STU
CNU
Z
X
Y

FIG. 4

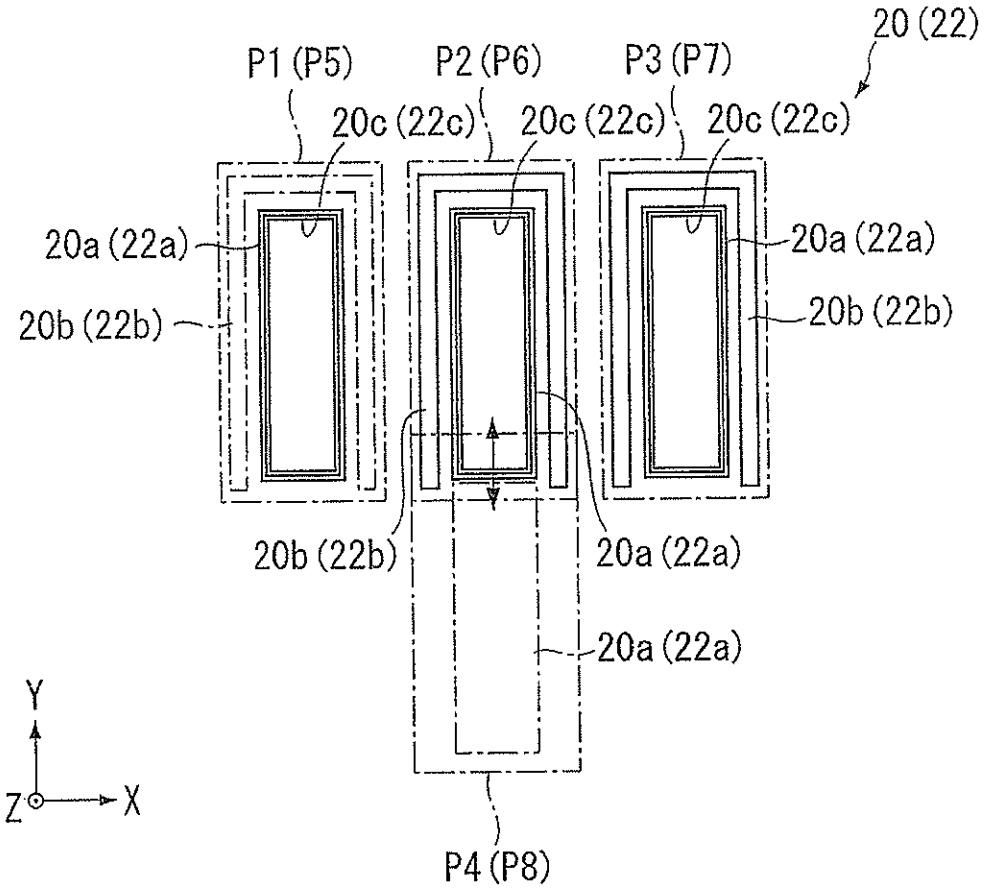
20 (22)
P1 (P5)
P2 (P6)
P3 (P7)
20c (22c)
20c (22c)
20c (22c)
20a (22a)
20b (22b)
20a (22a)
20b (22b)
20b (22b)
20a (22a)
20a (22a)
Y
Z
X
P4 (P8)

FIG. 5

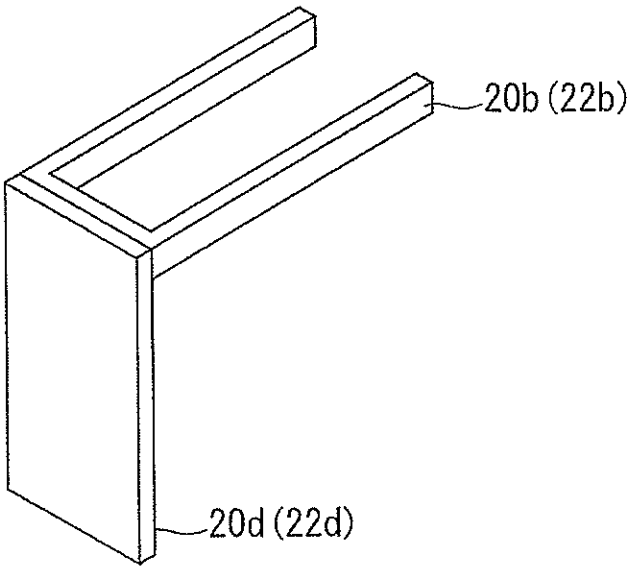
20b (22b)
20d (22d)

FIG. 6

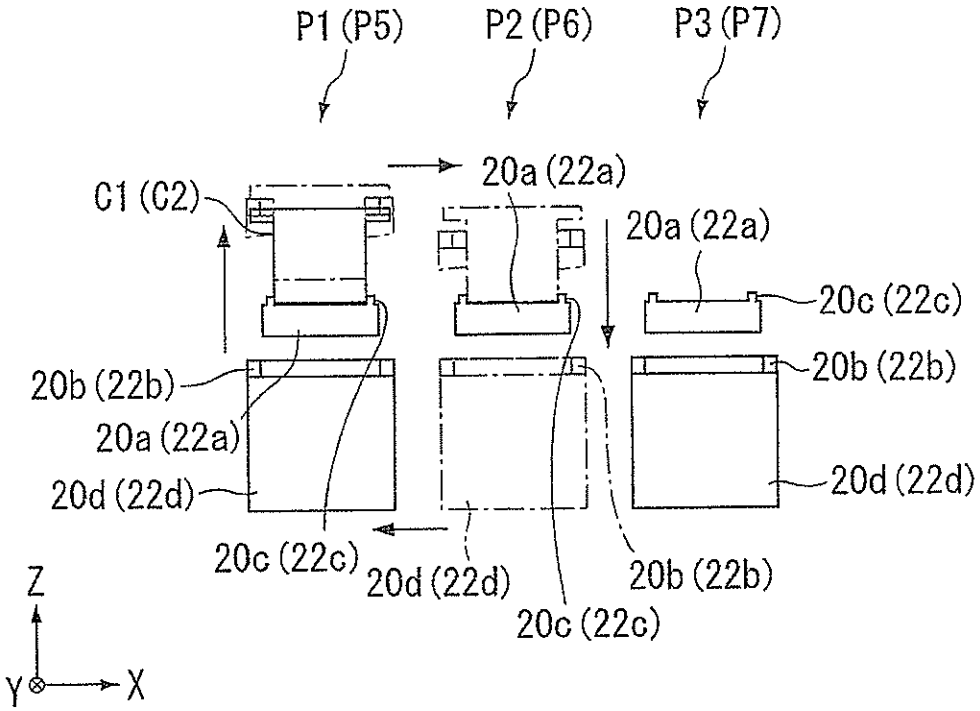
P1 (P5)
P2 (P6)
P3 (P7)
C1 (C2)
20a (22a)
20a (22a)
20c (22c)
20b (22b)
20b (22b)
20a (22a)
20d (22d)
20d (22d)
20c (22c)
20d (22d)
20b (22b)
20c (22c)
Z
Y
X

FIG. 7

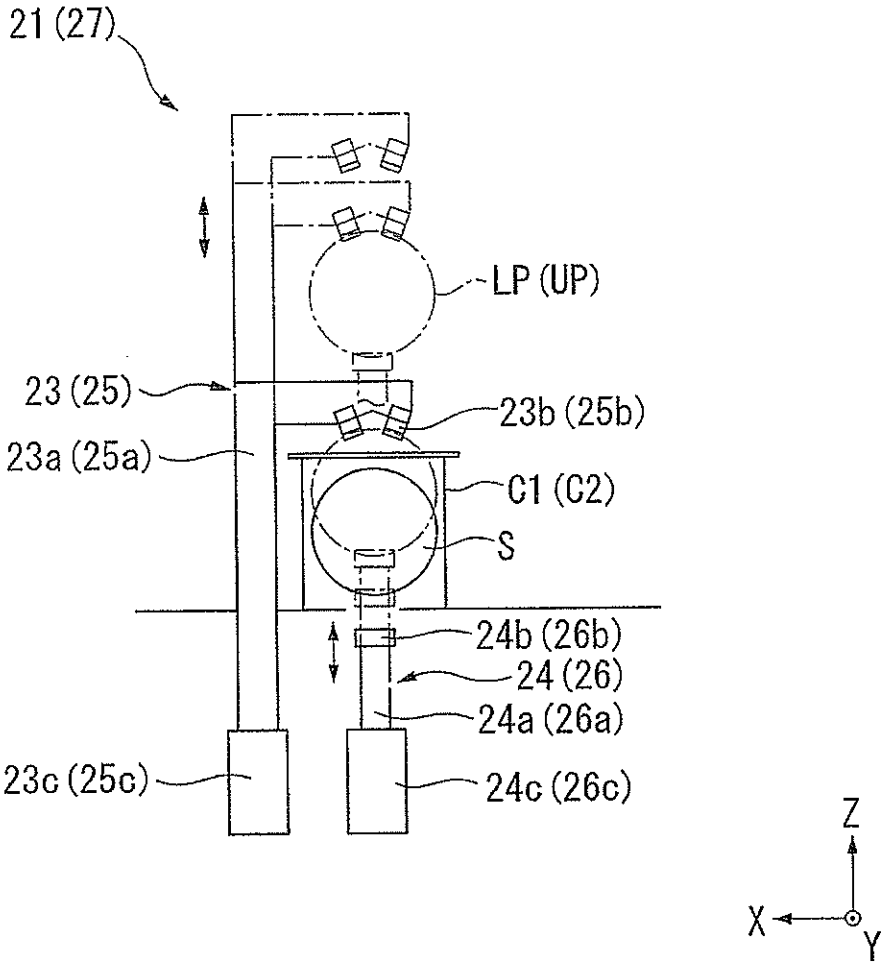
21 (27)
LP (UP)
23 (25)
23b (25b)
23a (25a)
C1 (C2)
S
24b (26b)
24 (26)
24a (26a)
23c (25c)
24c (26c)
Z
X
Y

FIG. 8

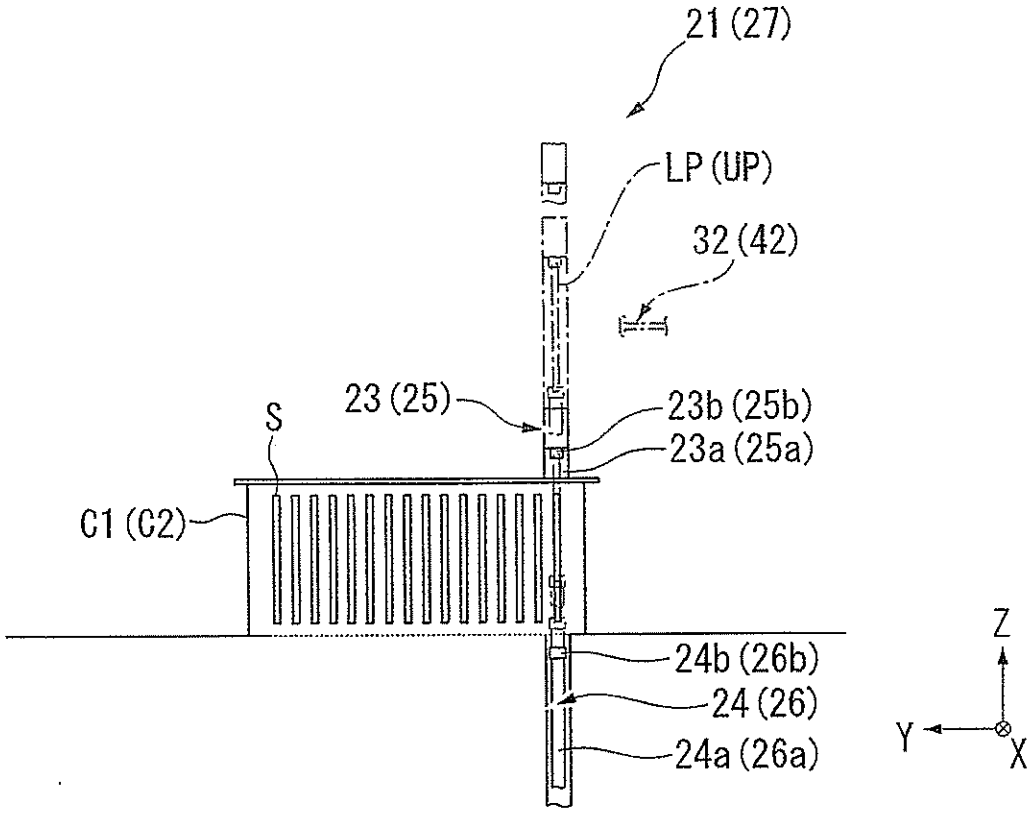
21 (27)
LP (UP)
32 (42)
23 (25)
23b (25b)
23a (25a)
S
C1 (C2)
24b (26b)
24 (26)
24a (26a)
Z
Y
X

FIG. 9

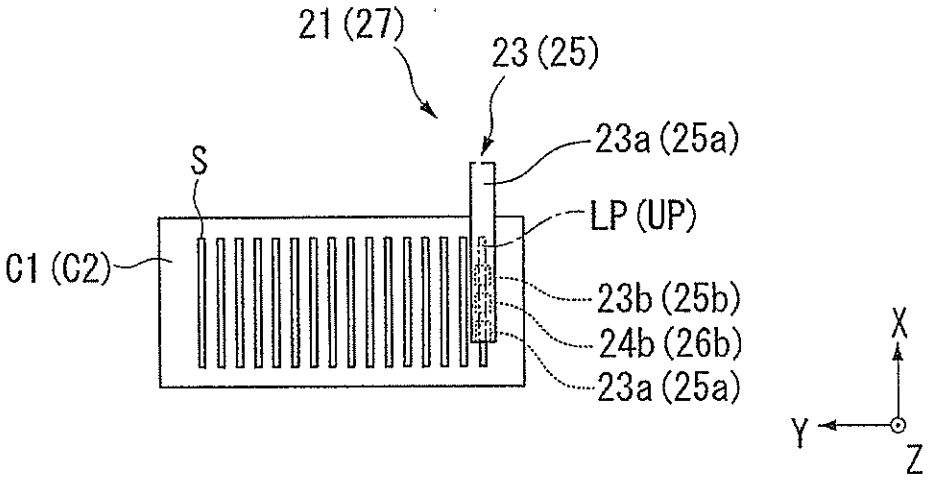
21 (27)
23 (25)
23a (25a)
S
LP (UP)
C1 (C2)
23b (25b)
24b (26b)
23a (25a)
X
Y
Z

FIG. 10A

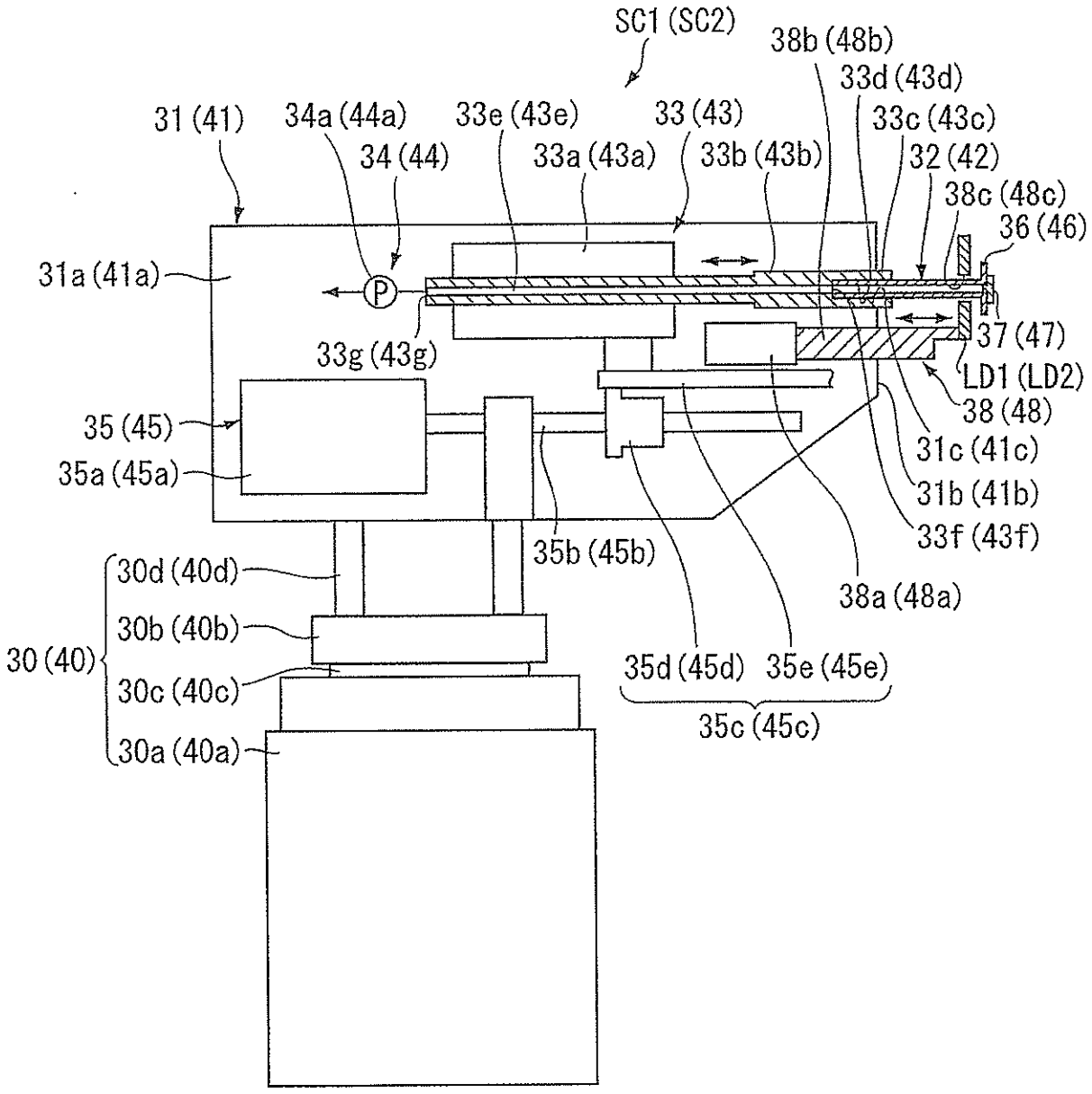

FIG. 10B

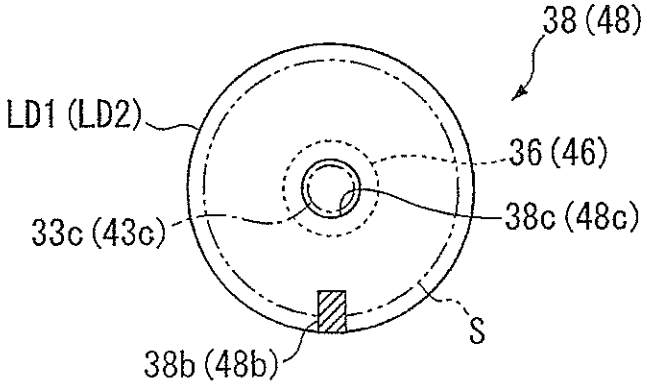

FIG. 11

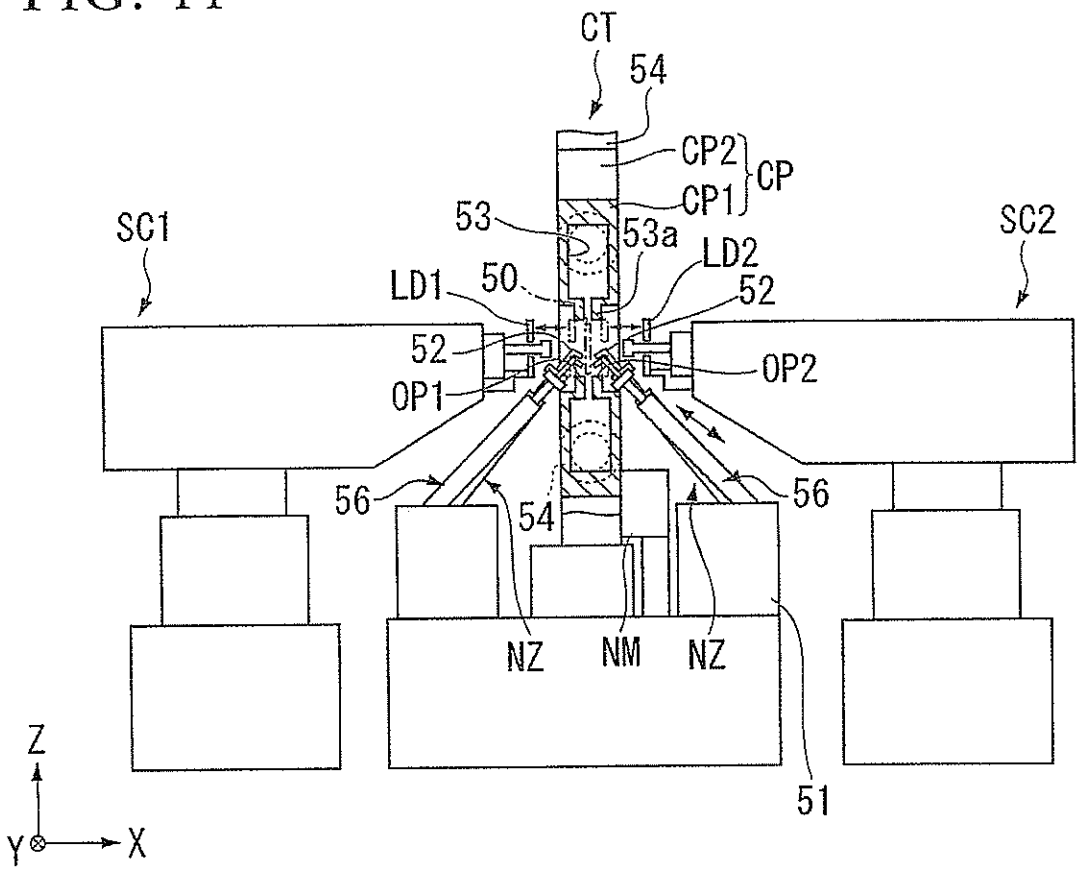
CT
54
CP2
CP
CP1
53
53a
LD2
SC1
SC2
LD1
50
52
52
OP2
OP1
56
54
56
NZ
NM
NZ
51
Z
Y
X

FIG. 12

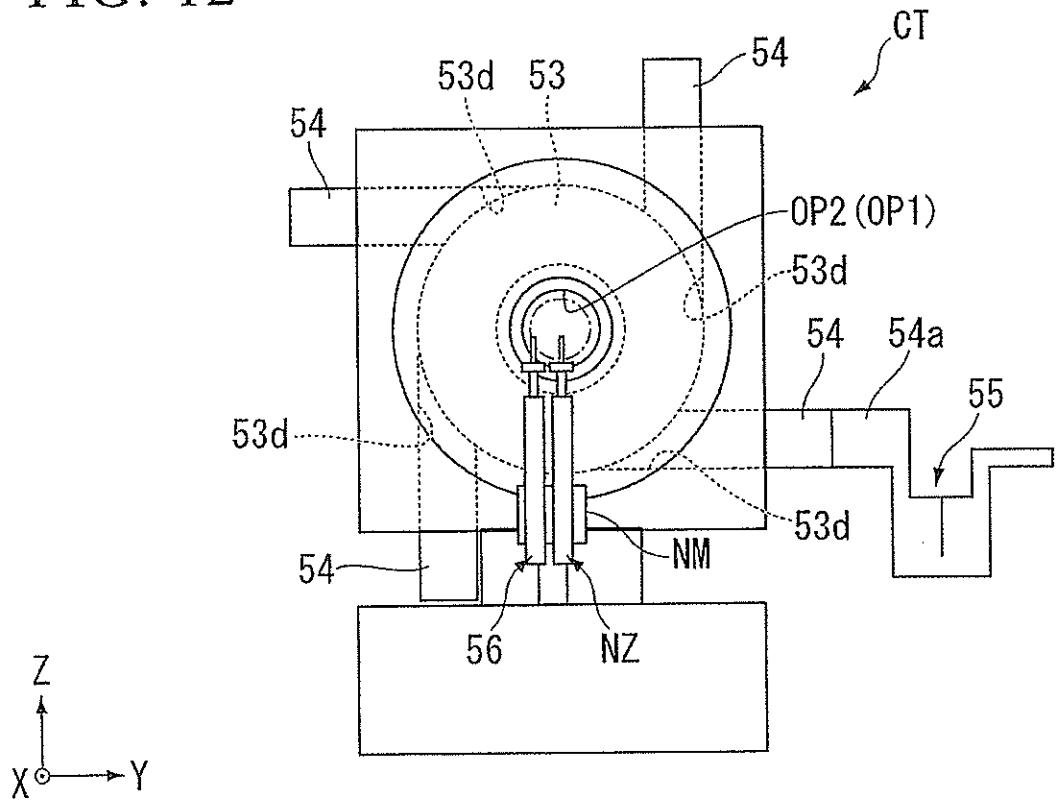
CT
54
53d
53
54
OP2 (OP1)
53d
54
54a
55
53d
53d
NM
54
56
NZ
Z
X
Y

FIG. 13

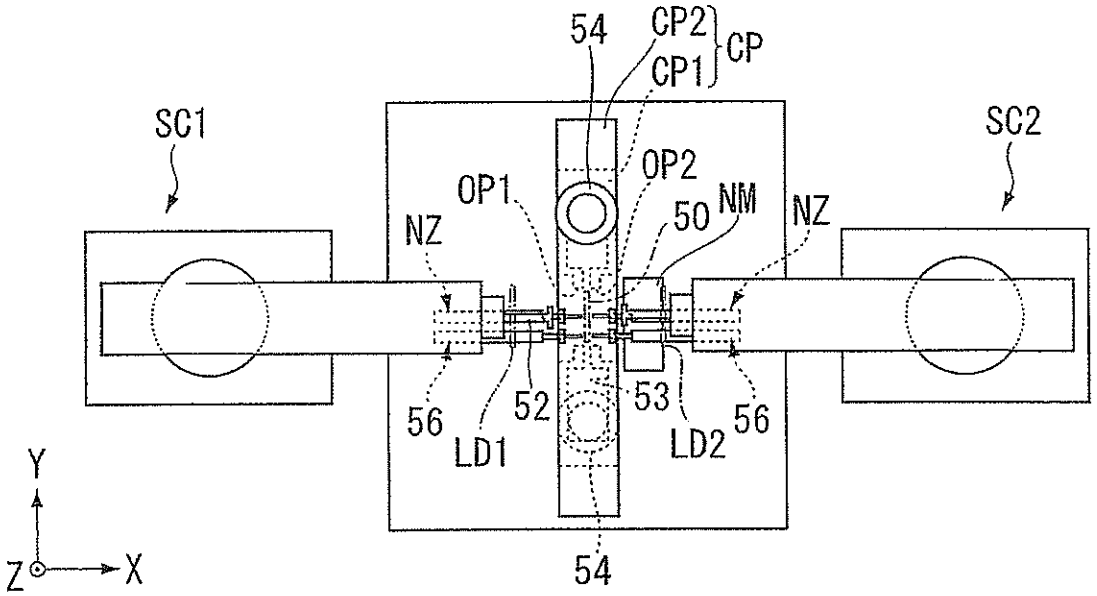

FIG. 14

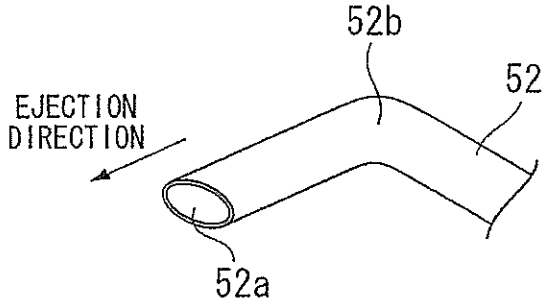

FIG. 15

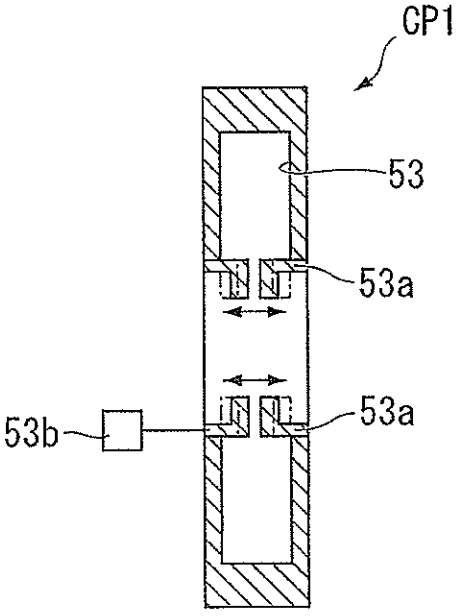

FIG. 16

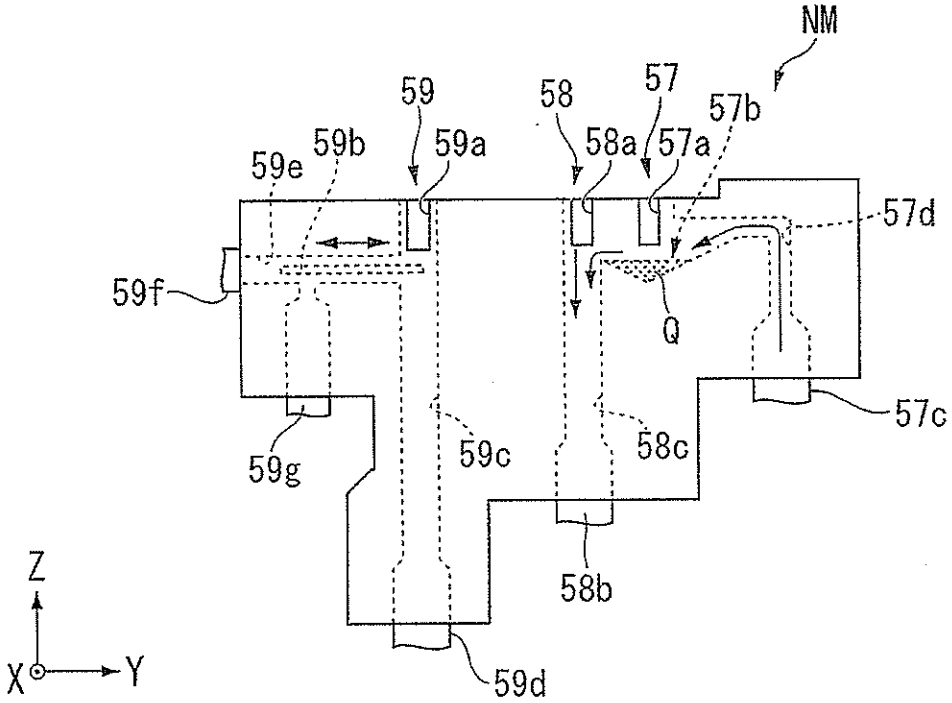
NM
59
58
57
57b
59e
59b
59a
58a
57a
57d
59f
Q
57c
59g
59c
58c
58b
59d
Z
X
Y

FIG. 17

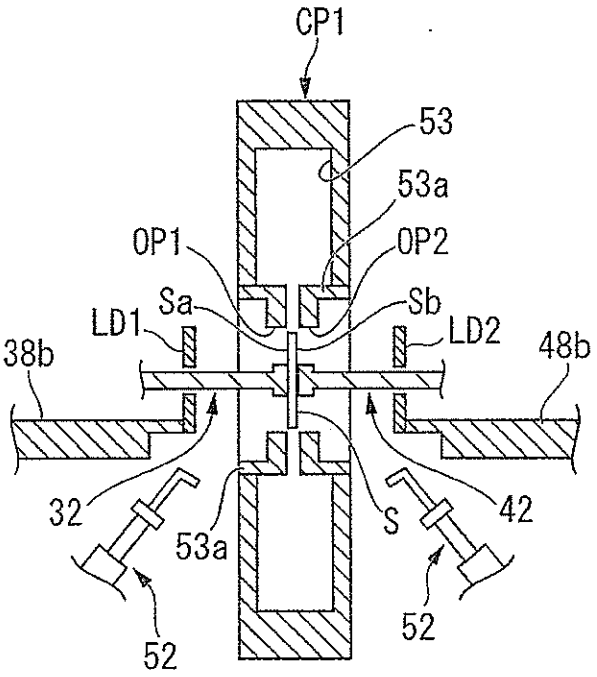
CP1
53
53a
OP1
OP2
Sa
Sb
LD1
LD2
38b
48b
32
53a
S
42
52
52

FIG. 18

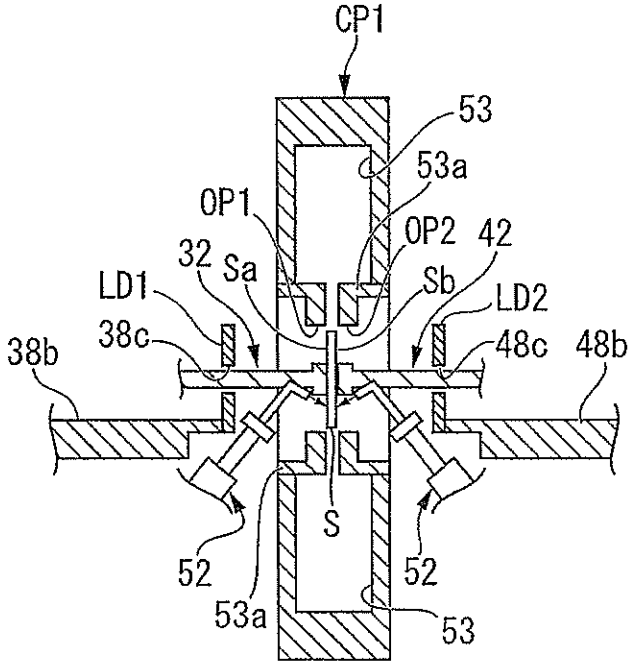
CP1
53
53a
OP1
OP2
42
32
Sa
Sb
LD1
LD2
38c
48c
38b
48b
S
52
52
53a
53

FIG. 19

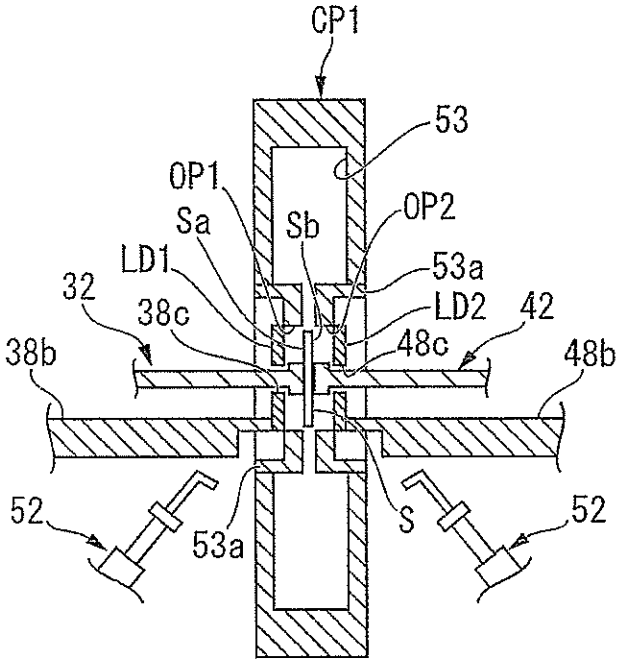

FIG. 20

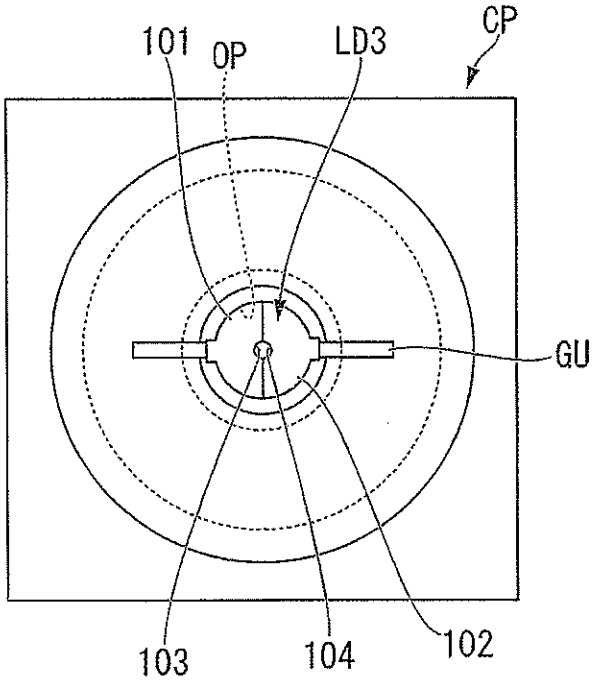

FIG. 21

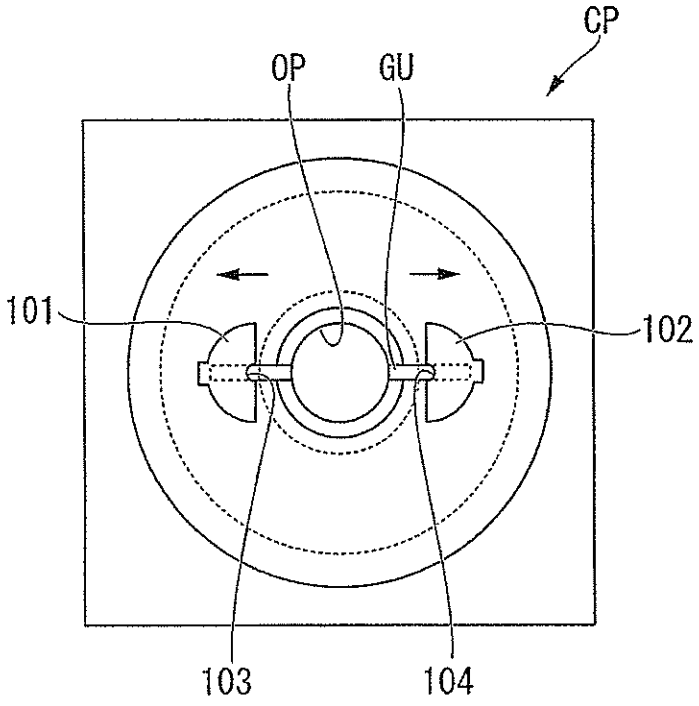

FIG. 22

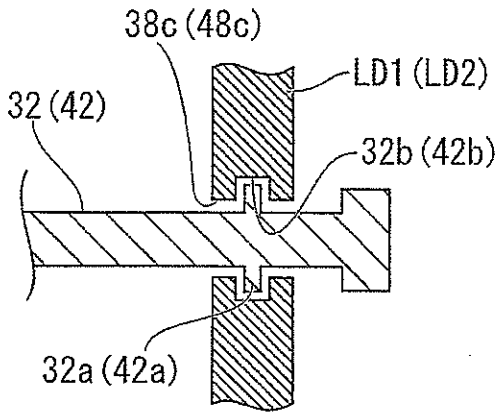

FIG. 23

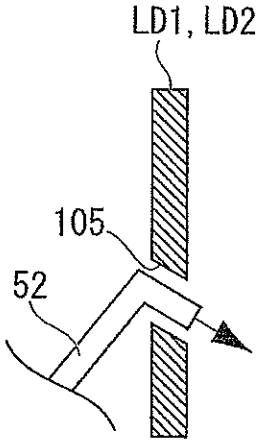

FIG. 24

