(12) INTERNATIONAL APPLICATION PUBLISHED UNDER THE PATENT COOPERATION TREATY (PCT)

(19) World Intellectual Property Organization
International Bureau

(43) International Publication Date
27 January 2022 (27.01.2022)

WIPO | PCT

(10) International Publication Number
WO 2022/020474 A1

(51) International Patent Classification:
H01L 25/16 (2006.01) *H01L 33/62* (2010.01)
H01L 33/64 (2010.01) *H01L 23/482* (2006.01)
H01L 33/44 (2010.01)

(21) International Application Number:
PCT/US2021/042578

(22) International Filing Date:
21 July 2021 (21.07.2021)

(25) Filing Language: English

(26) Publication Language: English

(30) Priority Data:
16/934,917 21 July 2020 (21.07.2020) US
20190472.9 11 August 2020 (11.08.2020) EP

(71) Applicant: **LUMILEDS LLC** [US/US]; 370 West Trimble Road, San Jose, California 95131 (US).

(72) Inventors: **HIN, Tze Yang**; 370 West Trimble Road, San Jose, California 95131 (US). **LAU, Seng Huat**; 370 West Trimble Road, San Jose, California 95131 (US). **KAGEYAMA, Hideo**; 370 West Trimble Road, San Jose, California 95131 (US).

(74) Agent: **KERNER, Dawn C.**; Volpe Koenig, 30 South 17th Street, Suite 1800, Philadelphia, Pennsylvania 19103 (US).

(81) Designated States *(unless otherwise indicated, for every kind of national protection available)*: AE, AG, AL, AM, AO, AT, AU, AZ, BA, BB, BG, BH, BN, BR, BW, BY, BZ, CA, CH, CL, CN, CO, CR, CU, CZ, DE, DJ, DK, DM, DO, DZ, EC, EE, EG, ES, FI, GB, GD, GE, GH, GM, GT, HN, HR, HU, ID, IL, IN, IR, IS, IT, JO, JP, KE, KG, KH, KN, KP, KR, KW, KZ, LA, LC, LK, LR, LS, LU, LY, MA, MD, ME, MG, MK, MN, MW, MX, MY, MZ, NA, NG, NI, NO, NZ, OM, PA, PE, PG, PH, PL, PT, QA, RO, RS, RU, RW, SA, SC, SD, SE, SG, SK, SL, ST, SV, SY, TH, TJ, TM, TN, TR, TT, TZ, UA, UG, US, UZ, VC, VN, WS, ZA, ZM, ZW.

(84) Designated States *(unless otherwise indicated, for every kind of regional protection available)*: ARIPO (BW, GH, GM, KE, LR, LS, MW, MZ, NA, RW, SD, SL, ST, SZ, TZ, UG, ZM, ZW), Eurasian (AM, AZ, BY, KG, KZ, RU, TJ, TM), European (AL, AT, BE, BG, CH, CY, CZ, DE, DK, EE, ES, FI, FR, GB, GR, HR, HU, IE, IS, IT, LT, LU, LV, MC, MK, MT, NL, NO, PL, PT, RO, RS, SE, SI, SK, SM, TR), OAPI (BF, BJ, CF, CG, CI, CM, GA, GN, GQ, GW, KM, ML, MR, NE, SN, TD, TG).

(54) Title: LIGHT-EMITTING DEVICE WITH METAL INLAY AND TOP CONTACTS

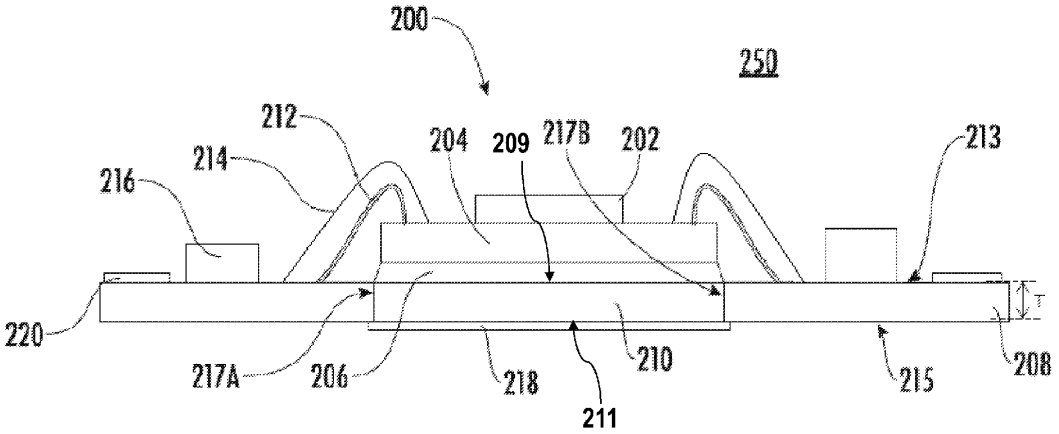

FIG. 2B

(57) Abstract: Light-emitting devices are described herein. A device includes a hybridized device having a top surface and a bottom surface and a packaging substrate comprising a metal inlay in an opening on a top surface of the packaging substrate. The metal inlay is thermally coupled to the bottom surface of the hybridized device. The device also includes conductive contacts on the top surface of the packaging substrate and conductive connectors electrically coupled between the top surface of the hybridized device and the top surface of the packaging substrate.

WO 2022/020474 A1

[Continued on next page]

Published:
— *with international search report (Art. 21(3))*