FIG. 1

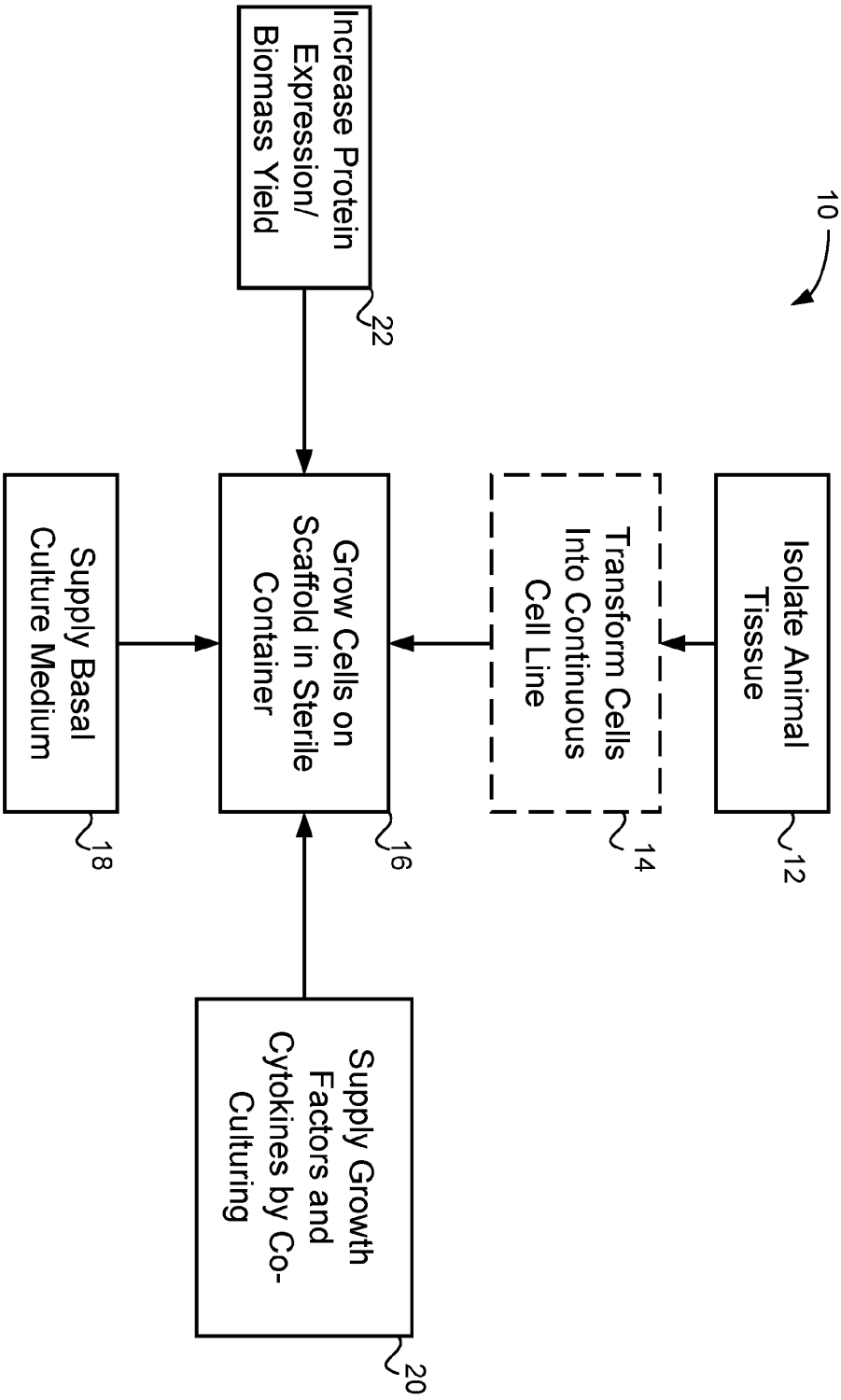
10
Isolate Animal Tisssue
12
Transform Cells Into Continuous Cell Line
14
Grow Cells on Scaffold in Sterile Container
16
Supply Basal Culture Medium
18
Supply Growth Factors and Cytokines by Co-Culturing
20
Increase Protein Expression/ Biomass Yield
22

FIG. 2

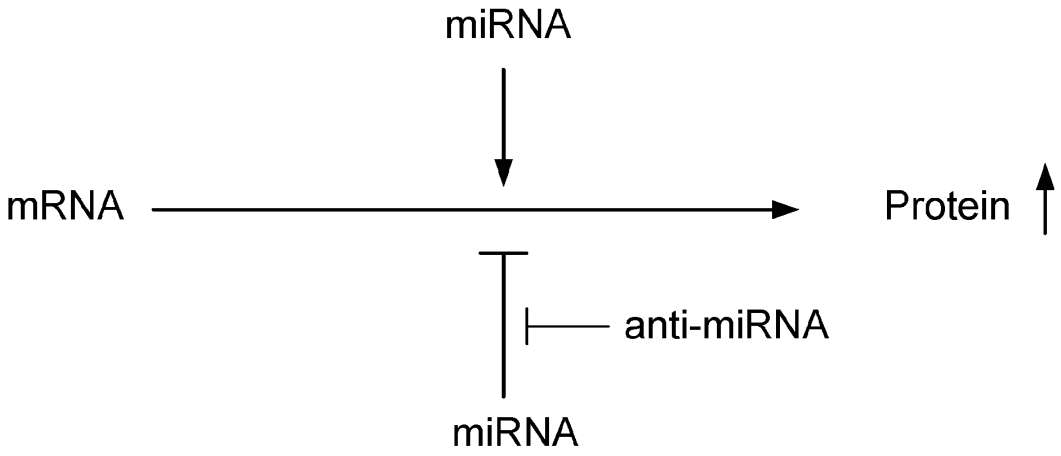

FIG. 3

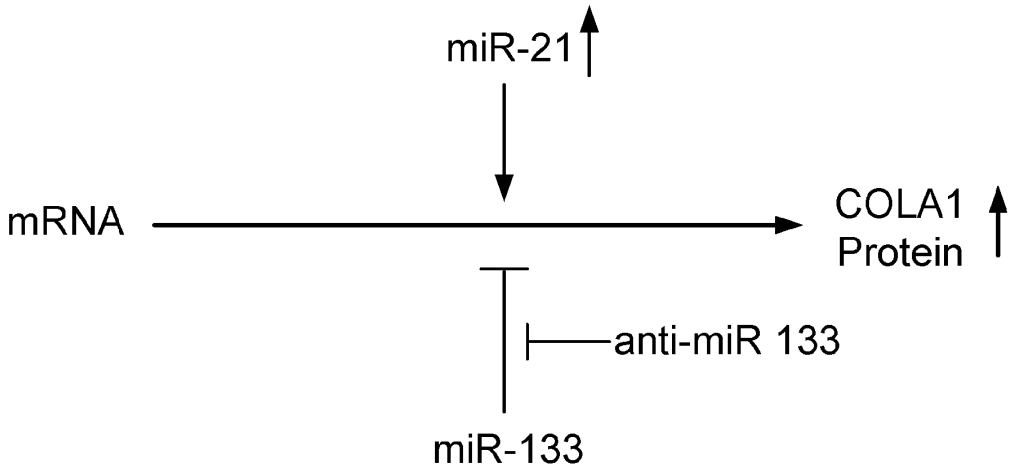

FIG. 4

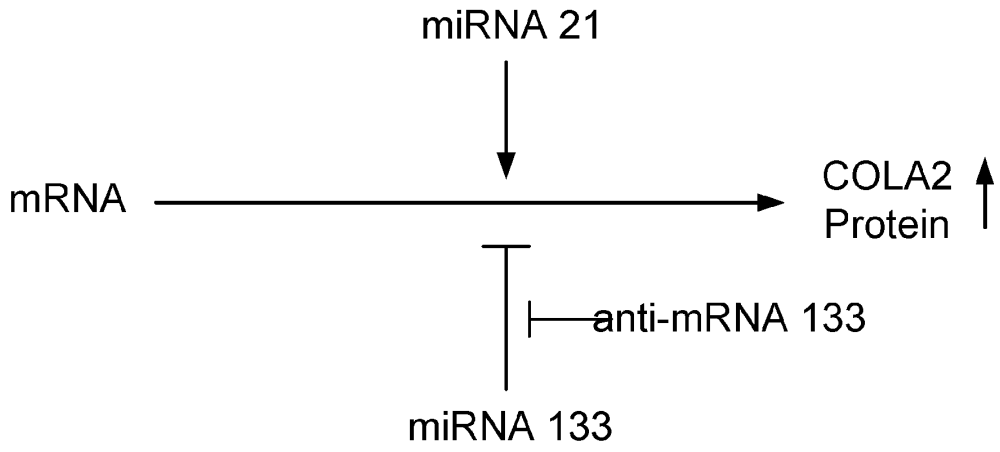

FIG. 5

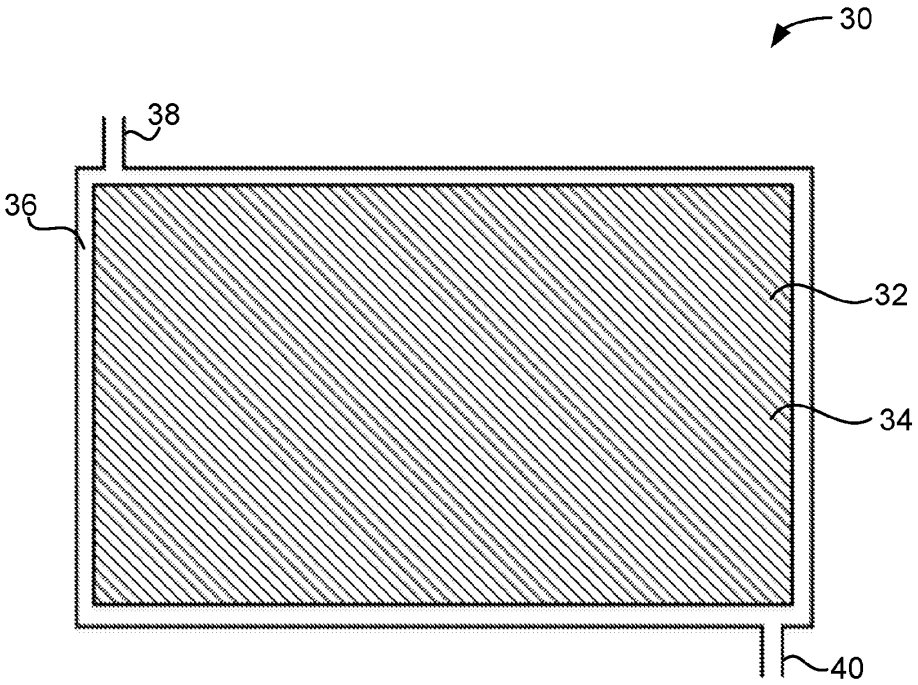

FIG. 6

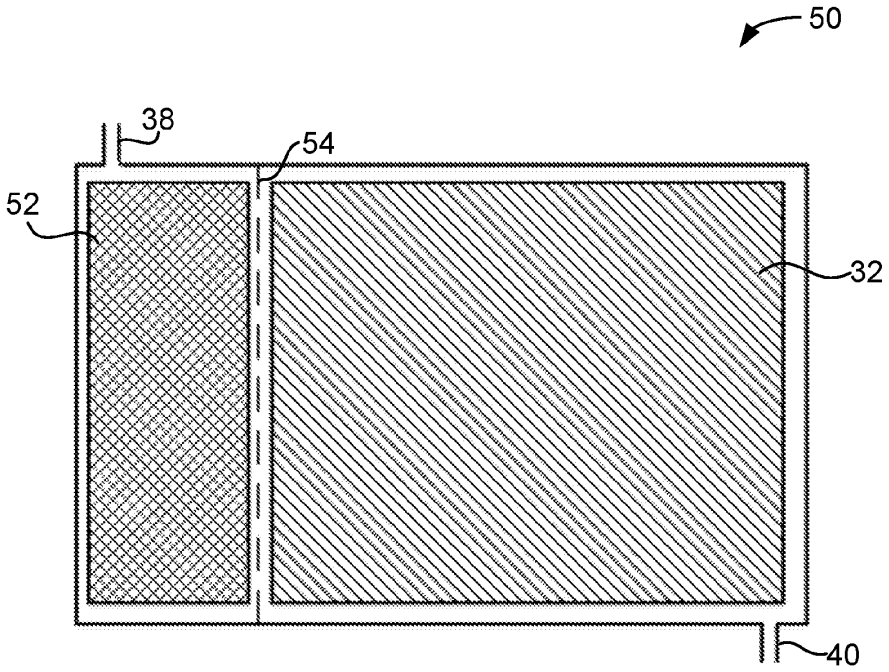

FIG. 7

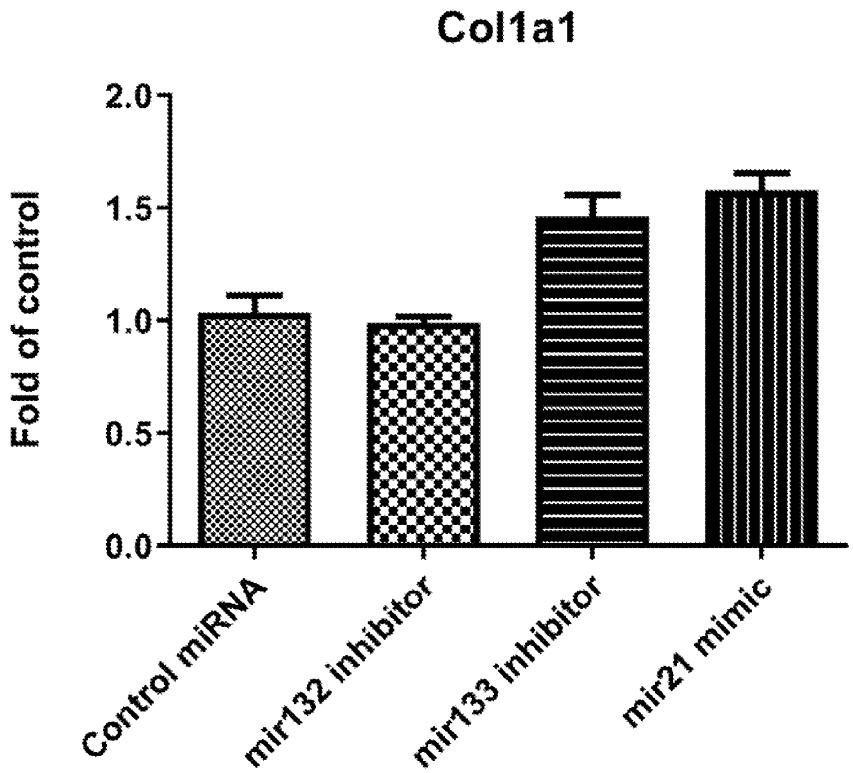
Col1a1
Fold of control
2.0
1.5
1.0
0.5
0.0
Control miRNA
mir132 inhibitor
mir133 inhibitor
mir21 mimic

FIG. 8

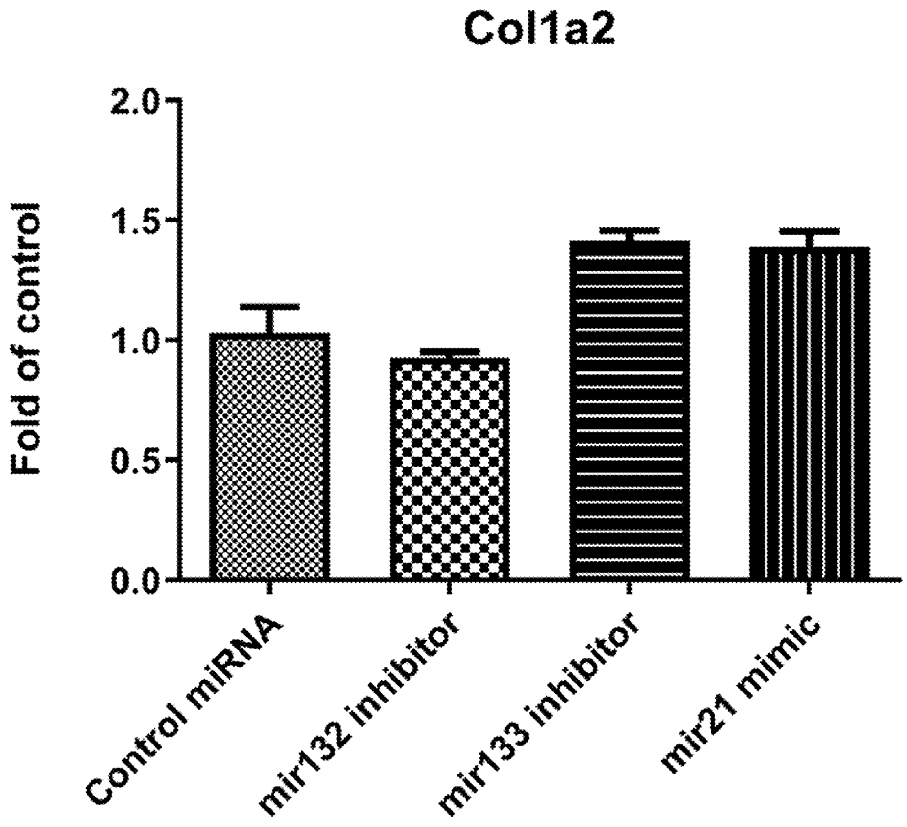
Col1a2
Fold of control
2.0
1.5
1.0
0.5
0.0
Control miRNA
mir132 inhibitor
mir133 inhibitor
mir21 mimic

FIG. 9A

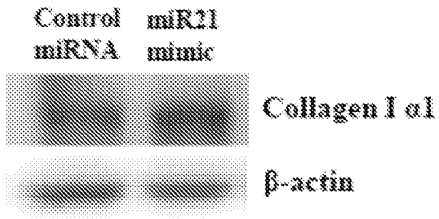

FIG. 9B

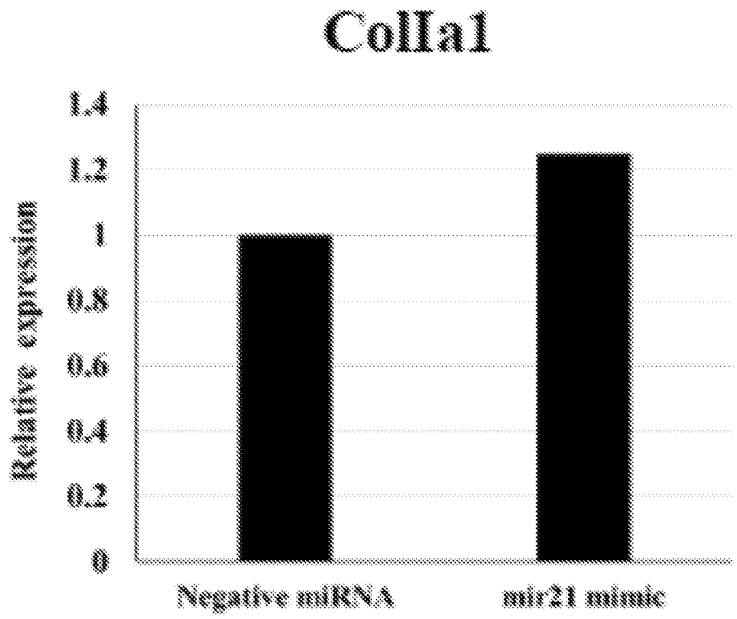
ColIa1
Relative expression
1.4
1.2
1
0.8
0.6
0.4
0.2
0
Negative miRNA
mir21 mimic

FIG. 10A

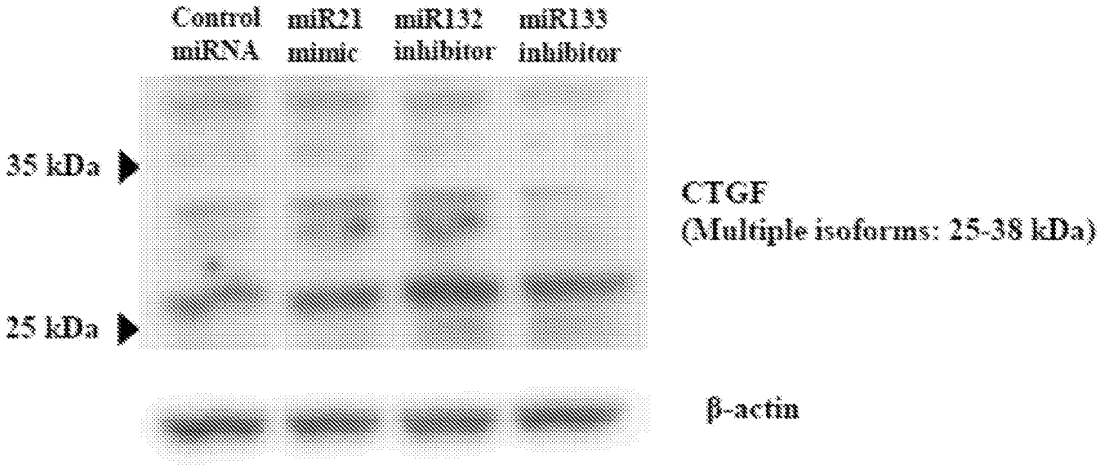
Control miRNA
miR21 mimic
miR132 inhibitor
miR133 inhibitor
35 kDa
25 kDa
CTGF
(Multiple isoforms: 25-38 kDa)
β-actin

FIG. 10B

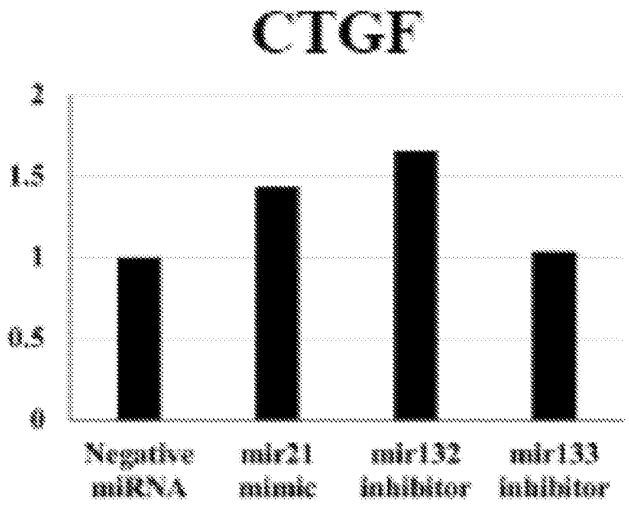
CTGF
2
1.5
1
0.5
0
Negative miRNA
mir21 mimic
mir132 inhibitor
mir133 inhibitor

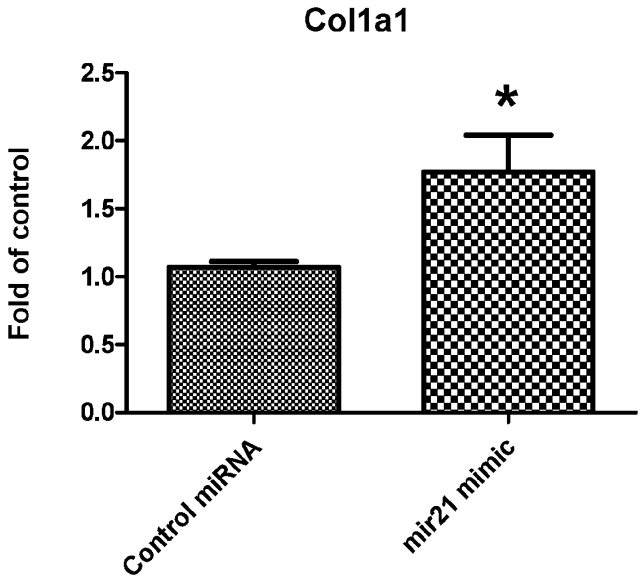
Col1a1
Fold of control
2.5
2.0
1.5
1.0
0.5
0.0
*
Control miRNA
mir21 mimic

FIG. 11