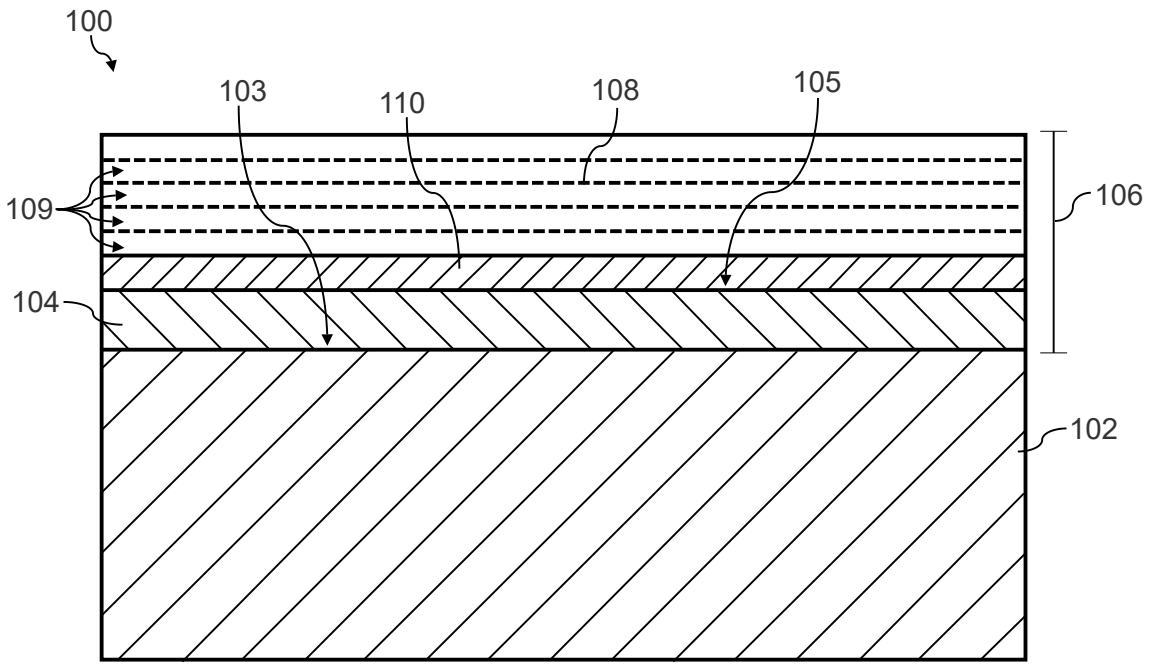

FIG. 1

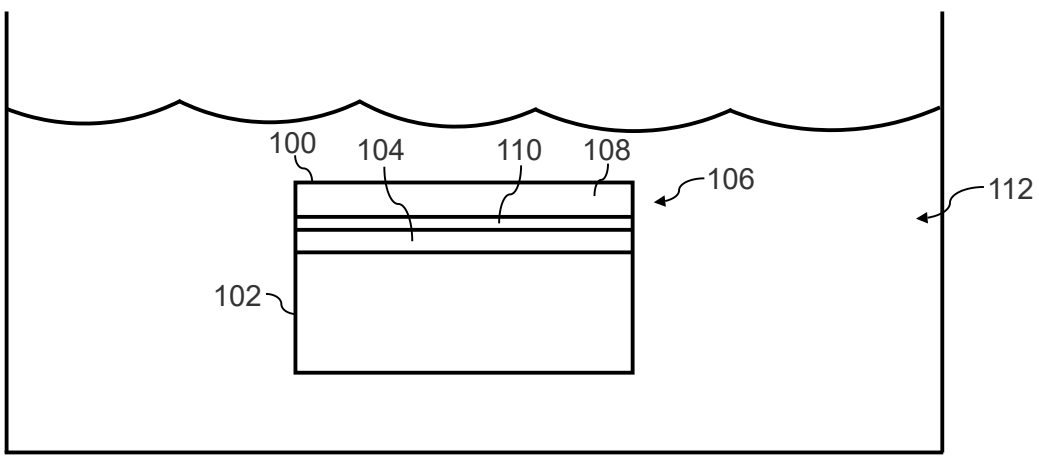

FIG. 2

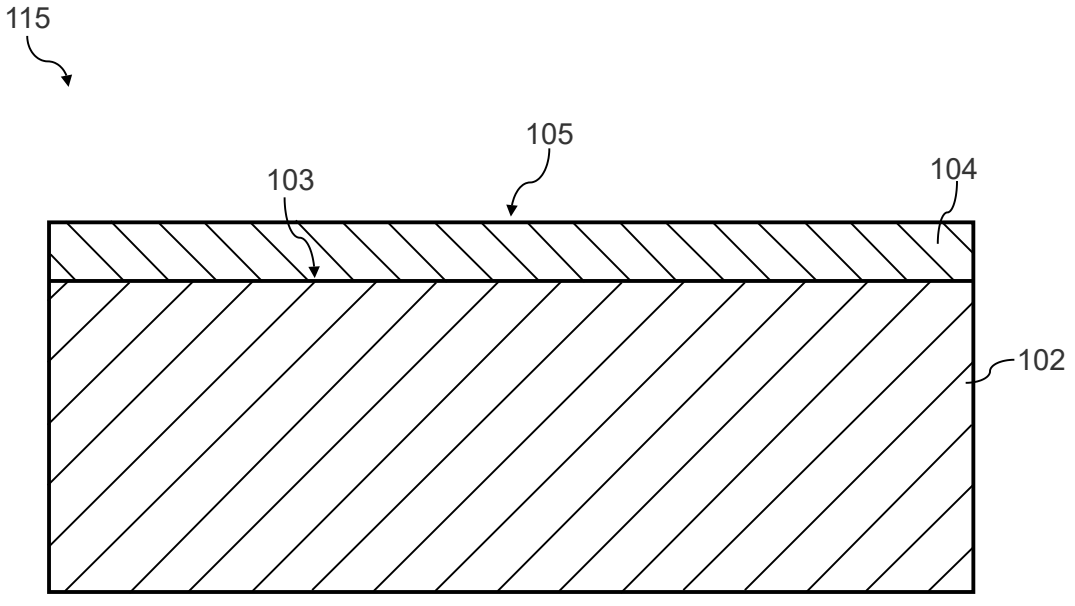

FIG. 3A

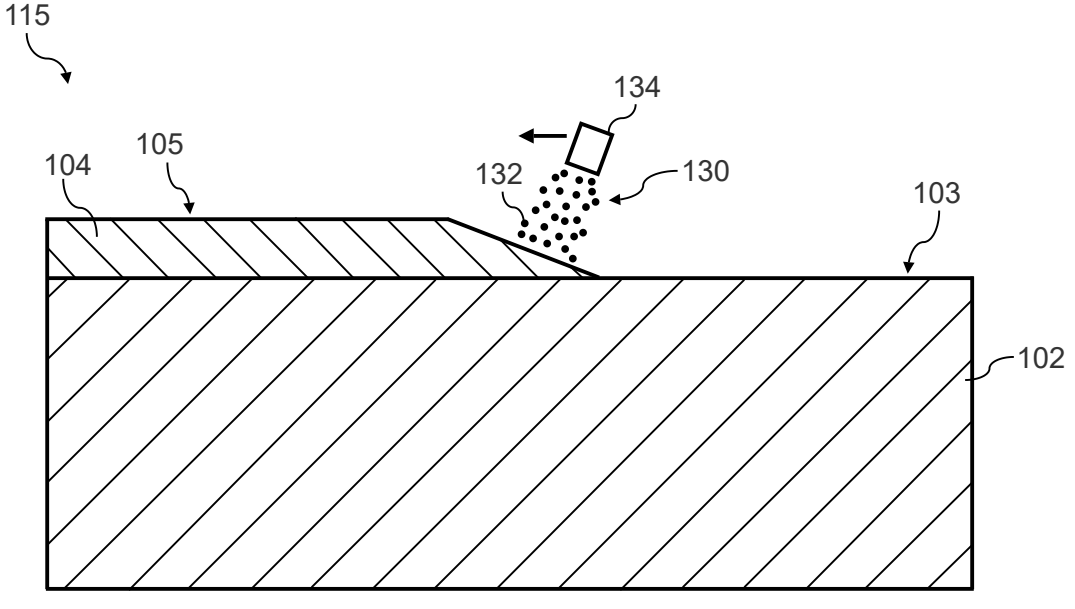

FIG. 3B

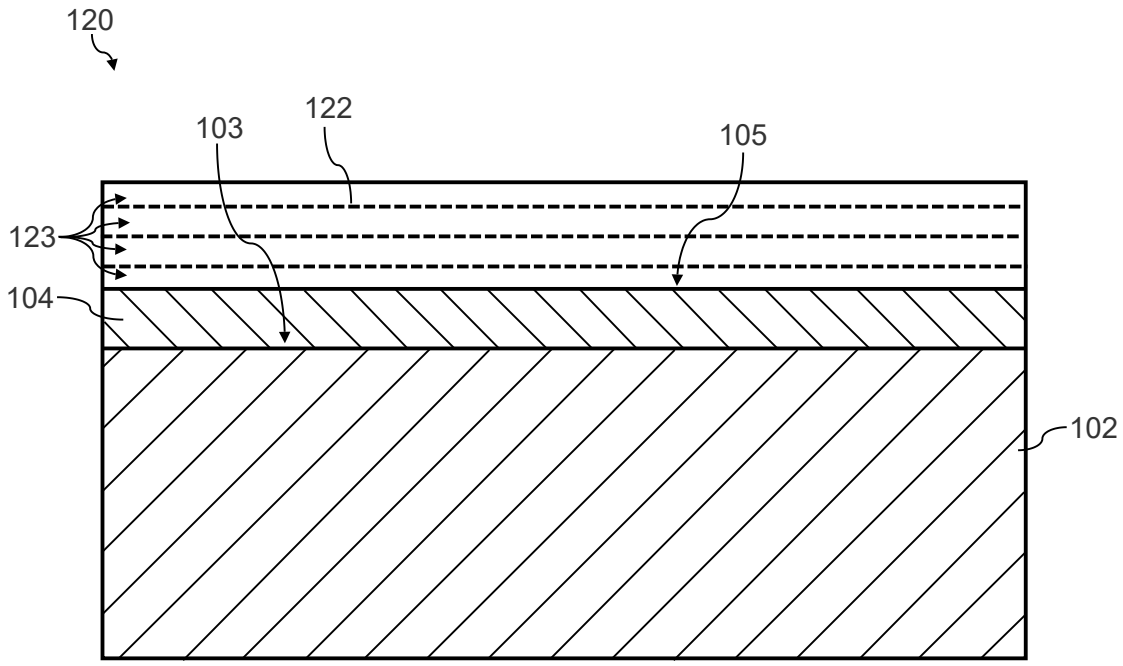

FIG. 4A

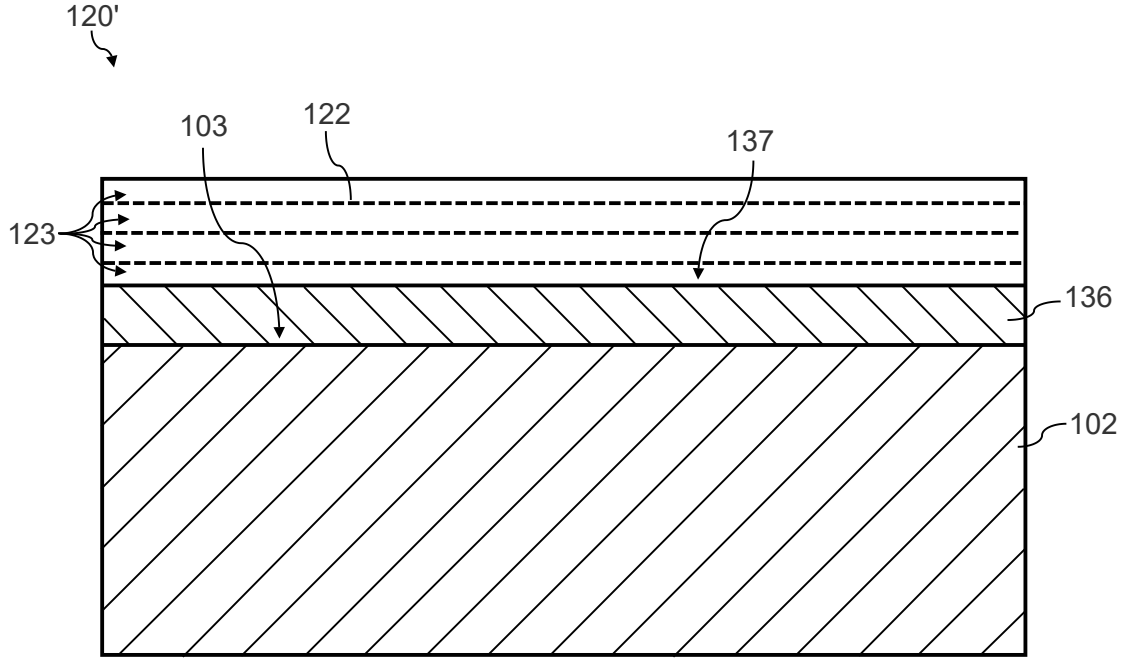

FIG. 4B

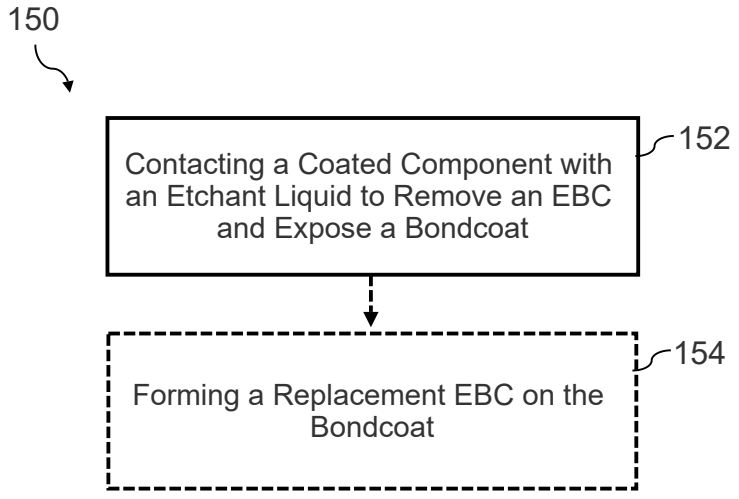
150
Contacting a Coated Component with an Etchant Liquid to Remove an EBC and Expose a Bondcoat
152
Forming a Replacement EBC on the Bondcoat
154

FIG. 5A

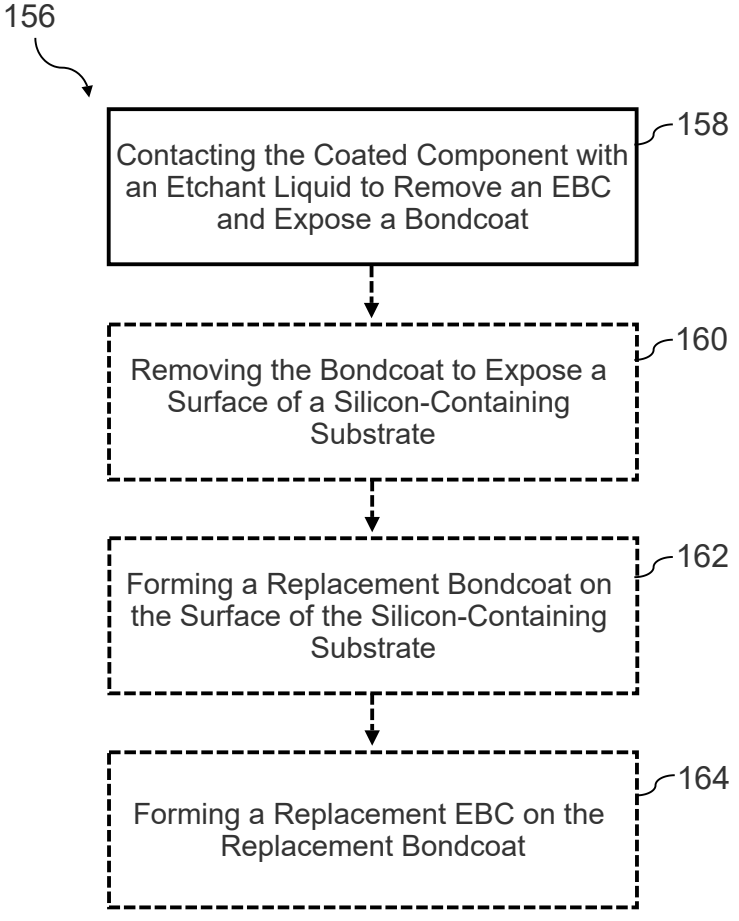
156
Contacting the Coated Component with an Etchant Liquid to Remove an EBC and Expose a Bondcoat
158
Removing the Bondcoat to Expose a Surface of a Silicon-Containing Substrate
160
Forming a Replacement Bondcoat on the Surface of the Silicon-Containing Substrate
162
Forming a Replacement EBC on the Replacement Bondcoat
164

FIG. 5B

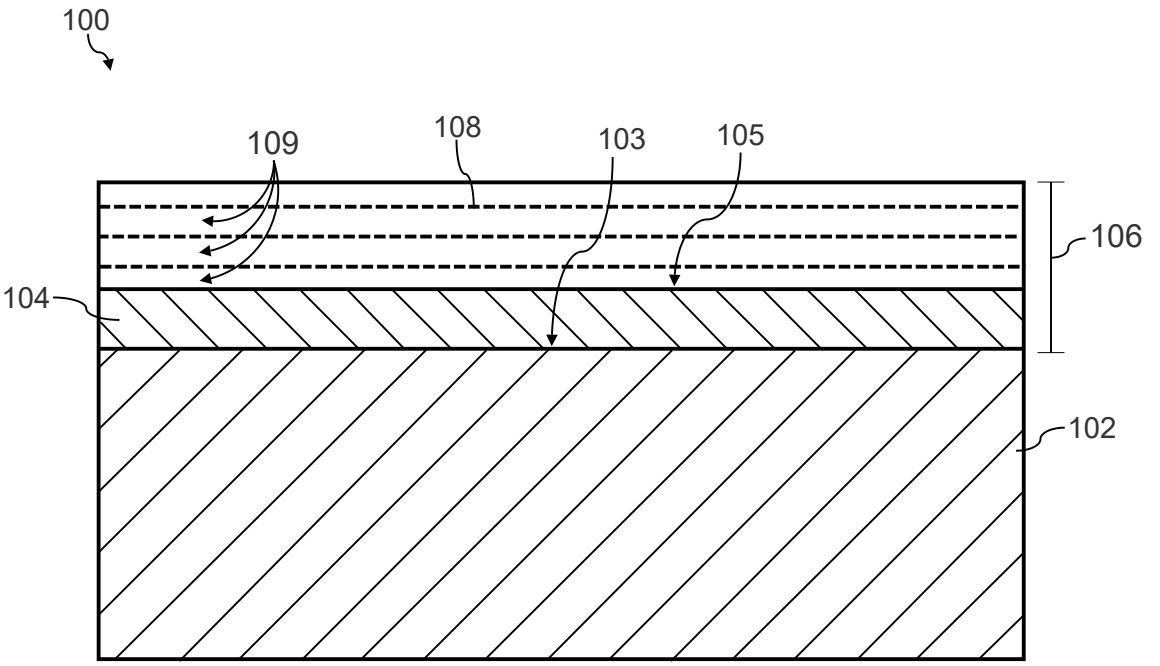

FIG. 6

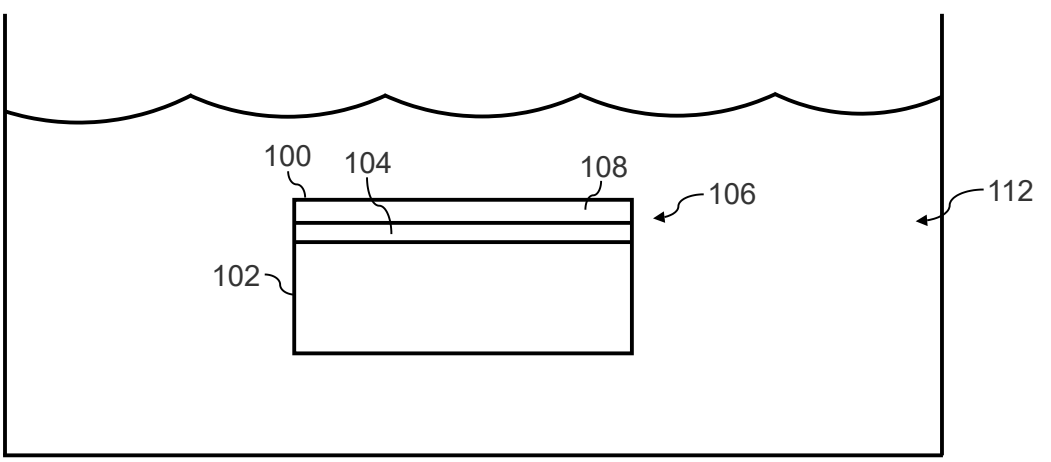

FIG. 7

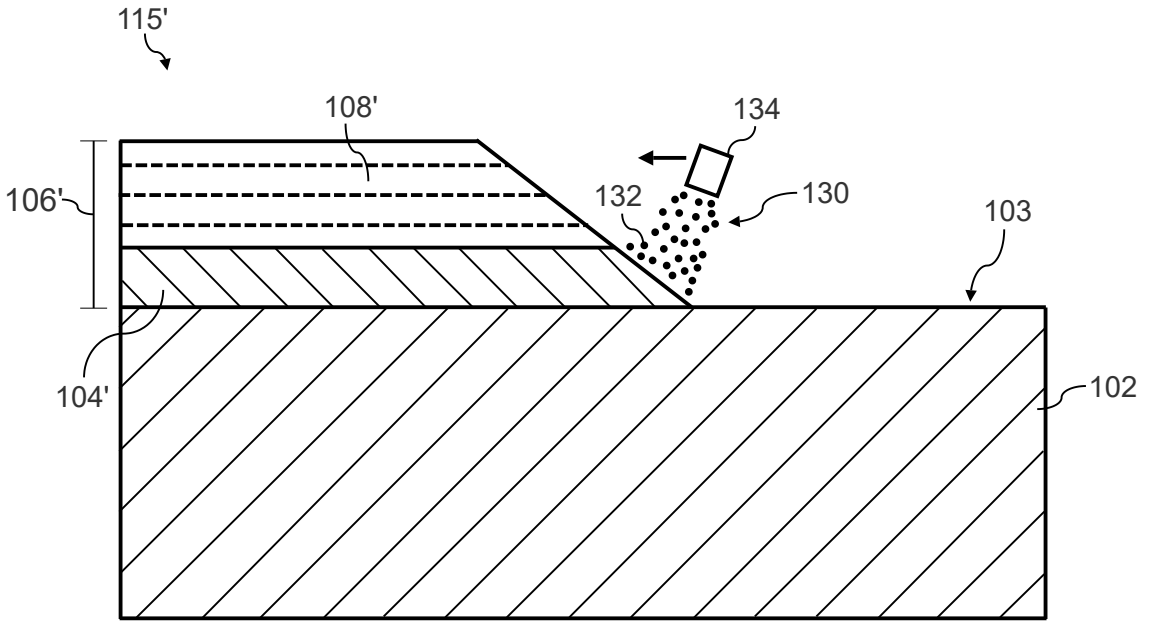

FIG. 8

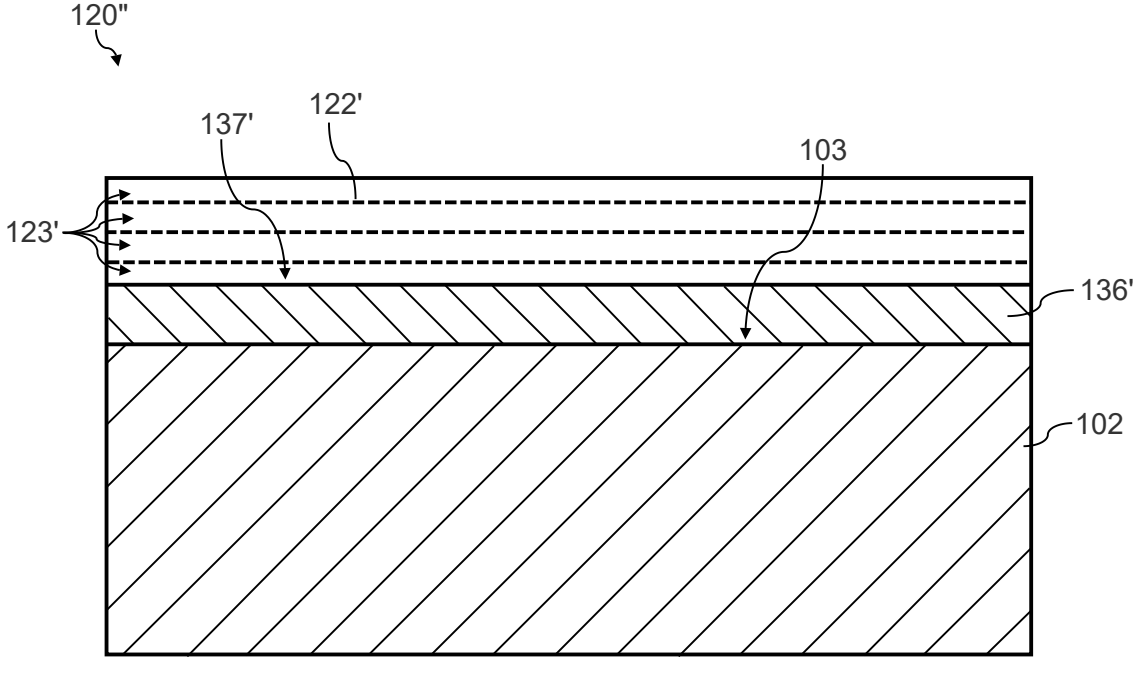

FIG. 9

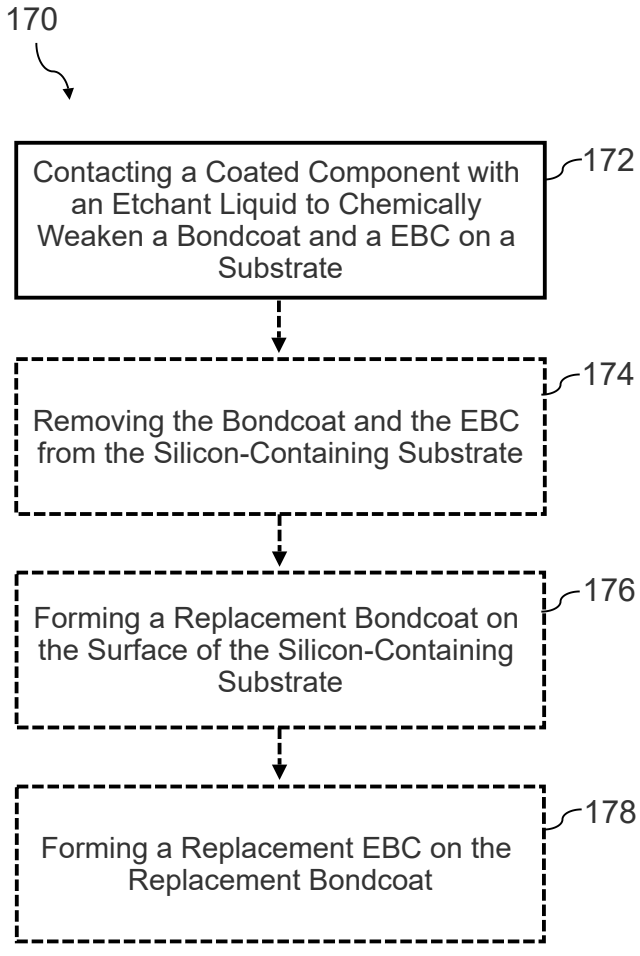
170
Contacting a Coated Component with an Etchant Liquid to Chemically Weaken a Bondcoat and a EBC on a Substrate
172
Removing the Bondcoat and the EBC from the Silicon-Containing Substrate
174
Forming a Replacement Bondcoat on the Surface of the Silicon-Containing Substrate
176
Forming a Replacement EBC on the Replacement Bondcoat
178

FIG. 10