Received Time 22. Feb. 5:09 Print Time 22. Feb. 5:36

2055-7

PCT WORLD INTELLECTUAL PROPERTY ORGANIZATION International Bureau

INTERNATIONAL APPLICATION PUBLISHED UNDER THE PATENT COOPERATION TREATY (PCT)

(51) International Patent Classification 5 : H02K 19/36 — A1

(11) International Publication Number: WO 94/00905

(43) International Publication Date: 6 January 1994 (06.01.94)

(21) International Application Number: PCT/US93/01360

(22) International Filing Date: 16 February 1993 (16.02.93)

(30) Priority data:
07/903,120 — 23 June 1992 (23.06.92) — US

(60) Parent Application or Grant
(63) Related by Continuation
US 07/903,120 (CON)
Filed on 23 June 1992 (23.06.92)

(71)(72) Applicant and Inventor: FARKAS, Otto [CA/US]; 1464 Graves Avenue, #107, El Cajon, CA 92021-8951 (US).

(74) Agent: CHARMASSON, Henri, J., A.; 1545 Hotel Circle South, Suite 150, San Diego, CA 92108-3413 (US).

(81) Designated States: AU, BR, CA, CZ, HU, JP, KP, KR, NZ, RU, SK, UA, US, European patent (AT, BE, CH, DE, DK, ES, FR, GB, GR, IE, IT, LU, MC, NL, PT, SE).

Published
With international search report.
With amended claims.

(54) Title: TRANSIENT-FREE SYNCHRONOUS ELECTRICAL POWER MACHINE

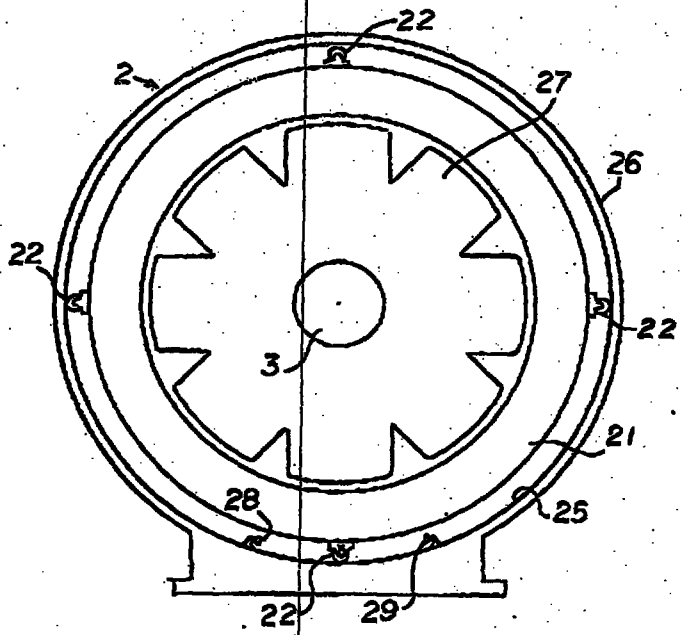

(57) Abstract

Proximity switches and circumferentially movable stator windings allow a motor-generator (2) to simultaneously sense and switch from a synchronous motor position to a synchronous generator position. The mechanism replaces the conventional separate sensing and switching of motor-generator functions. Automatic rotational repositioning of the stator (21) maintains constant voltage and prevents the generation of transient voltages or harmonics. The stator flux leads the rotor magnetic flux slightly in a motor position. As the stator field weakens due to a failure of the normal power supply, the counter torque also weakens and the stator windings are biased to begin to turn with the rotor (27) until the rotor and stator fields are in step, i.e., when virtually no current is generated or consumed or until a generator position is reached. The dynamic stator may also be used in electric motors or generators to filter or cushion variations in the power supply or in the load.

FEB-21-1996 13:16 PARKER MARSHALL