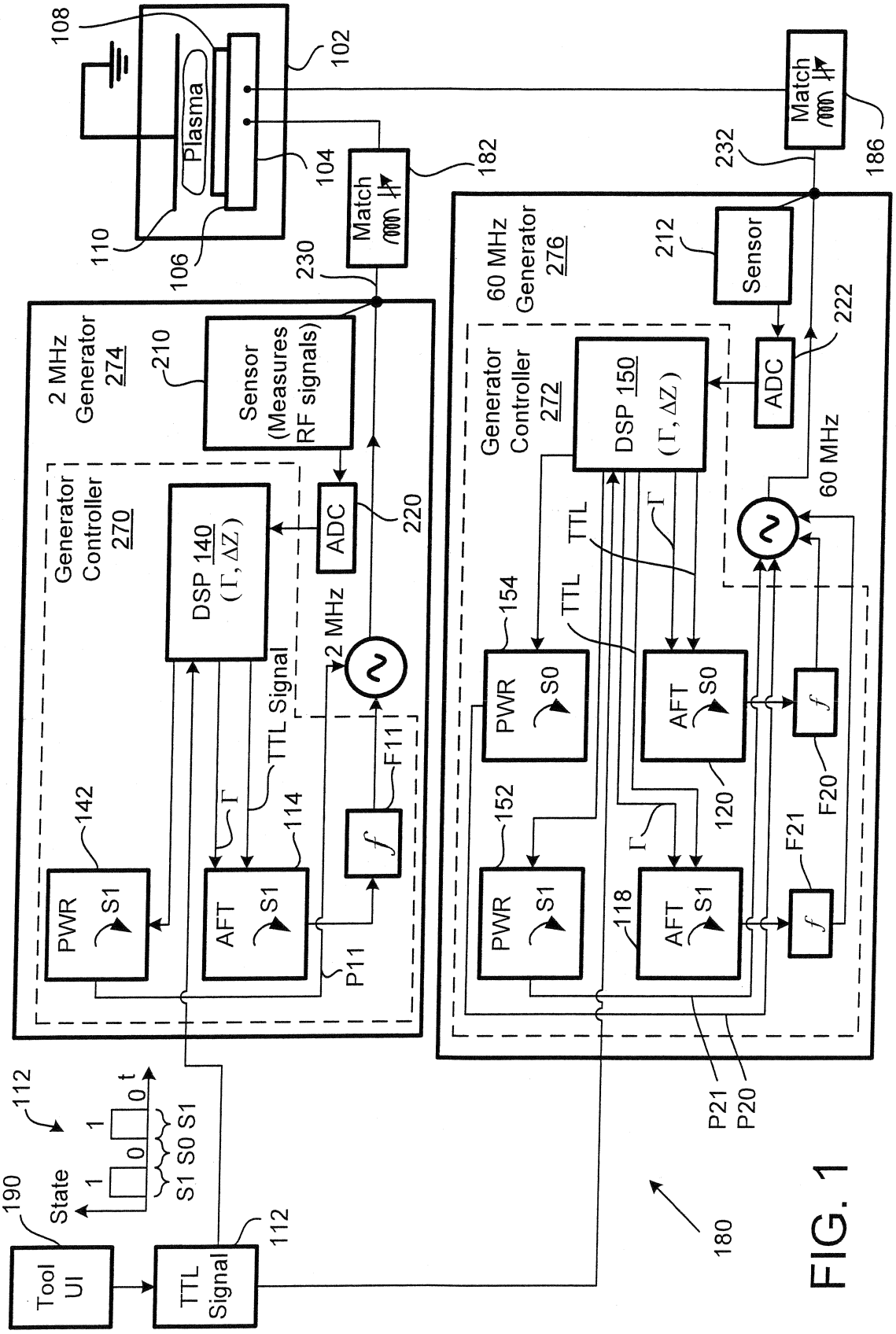

108
102
Plasma
104
110
106
Match
182
230
Match
186
232
2 MHz
Generator
274
210
Sensor
(Measures
RF signals)
Generator
Controller
270
DSP 140
(Γ, ΔZ)
ADC
220
2 MHz
TTL Signal
142
PWR
S1
114
AFT
S1
Γ
F11
P11
60 MHz
Generator
276
212
Sensor
222
ADC
Generator
Controller
272
DSP 150
(Γ, ΔZ)
60 MHz
TTL
154
PWR
S0
AFT
S0
120
F20
152
PWR
S1
118
AFT
S1
F21
P21
P20
112
State
1
0
1
0
t
S1 S0 S1
190
Tool
UI
TTL
Signal
112
180

FIG. 1

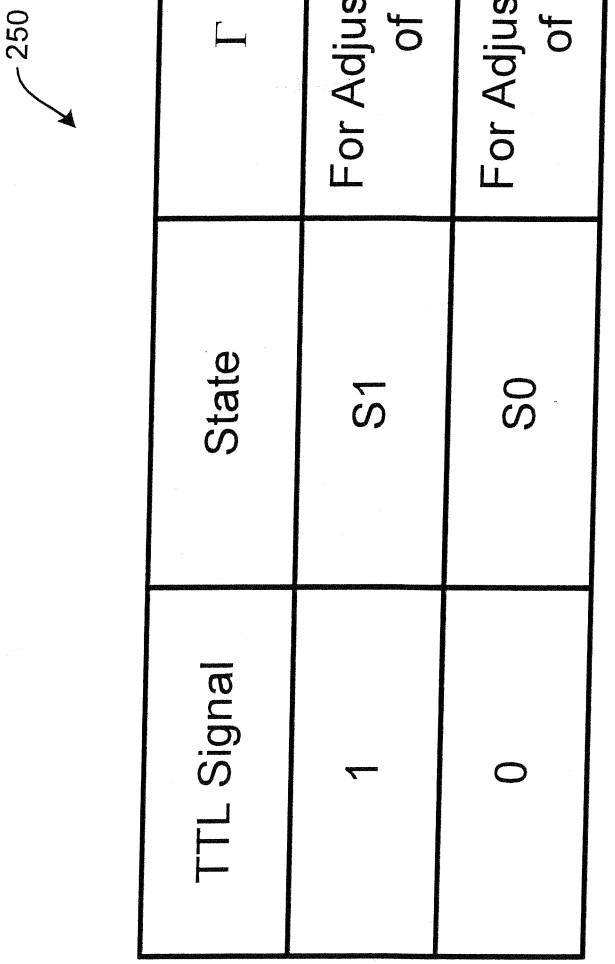
250
TTL Signal
State
Γ
1
S1
For Adjustment of f
0
S0
For Adjustment of f

FIG. 2

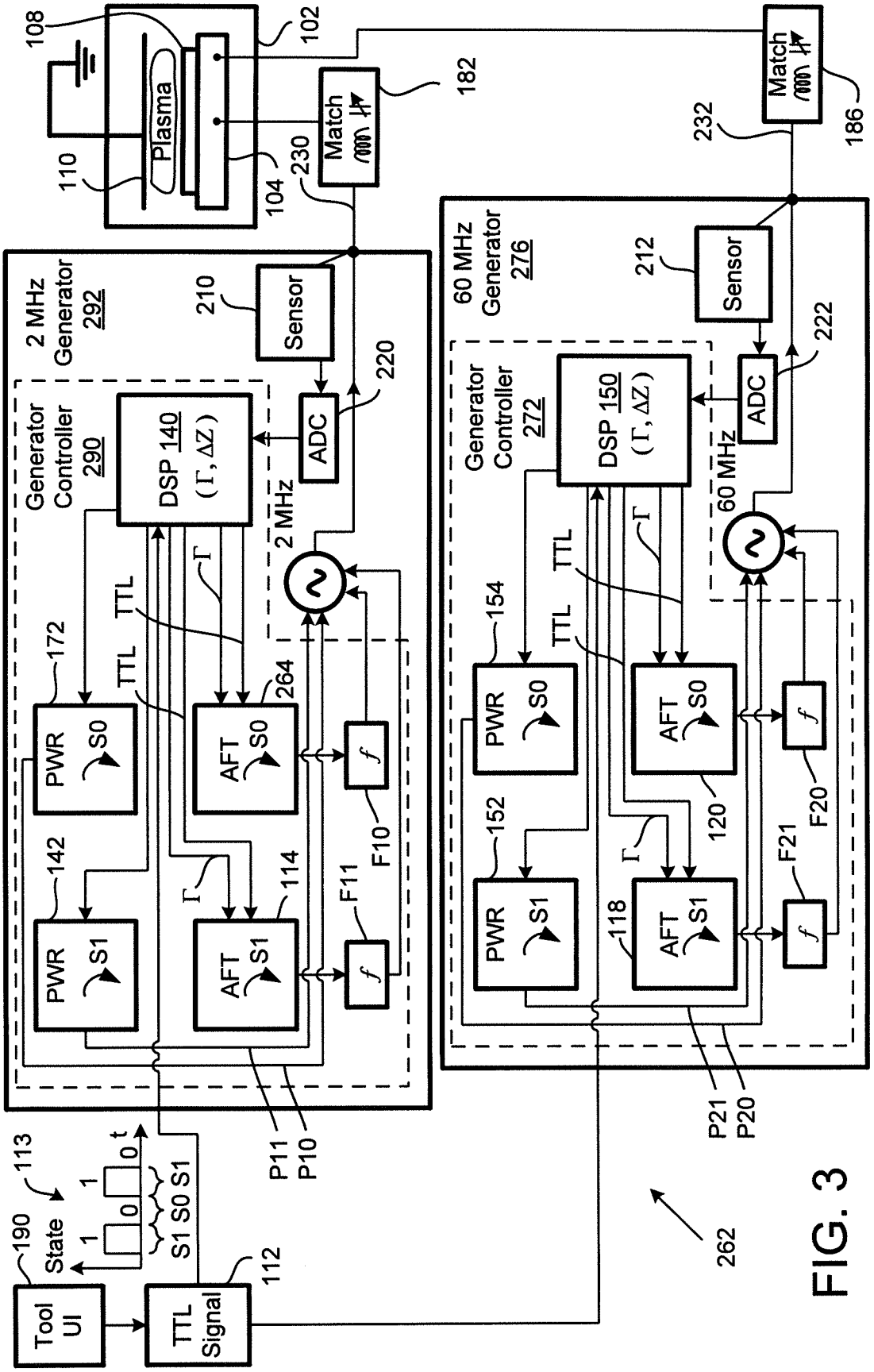

Plasma
Match
Sensor
ADC
DSP 140
(Γ, ΔZ)
Generator Controller 290
2 MHz Generator 292
2 MHz
PWR S0
PWR S1
AFT S0
AFT S1
TTL
Γ
F10
F11
P11
P10
Tool UI
TTL Signal
State
S1 S0 S1
60 MHz Generator 276
Generator Controller 272
DSP 150
(Γ, ΔZ)
60 MHz
F20
F21
P21
P20

FIG. 3

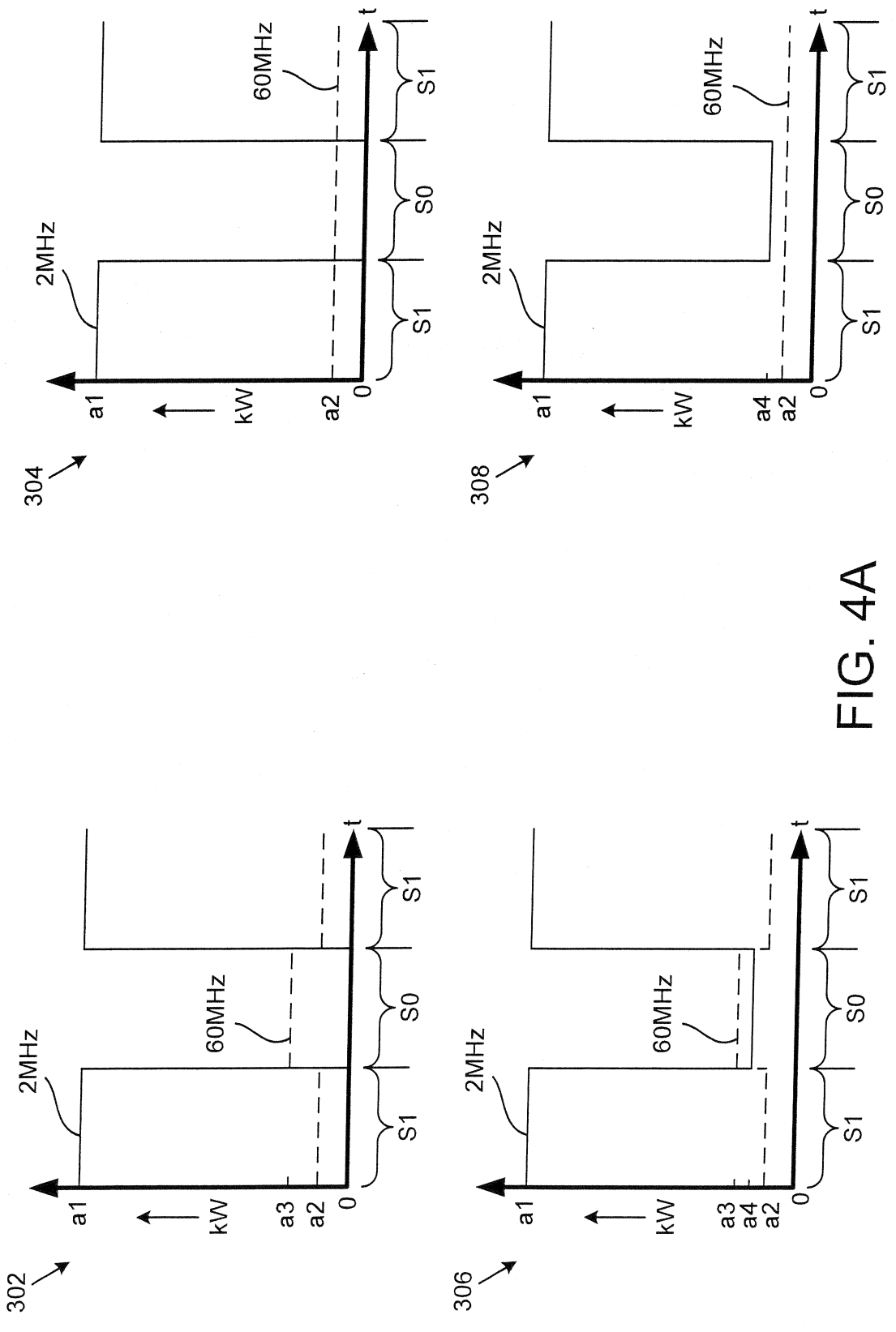

FIG. 4A

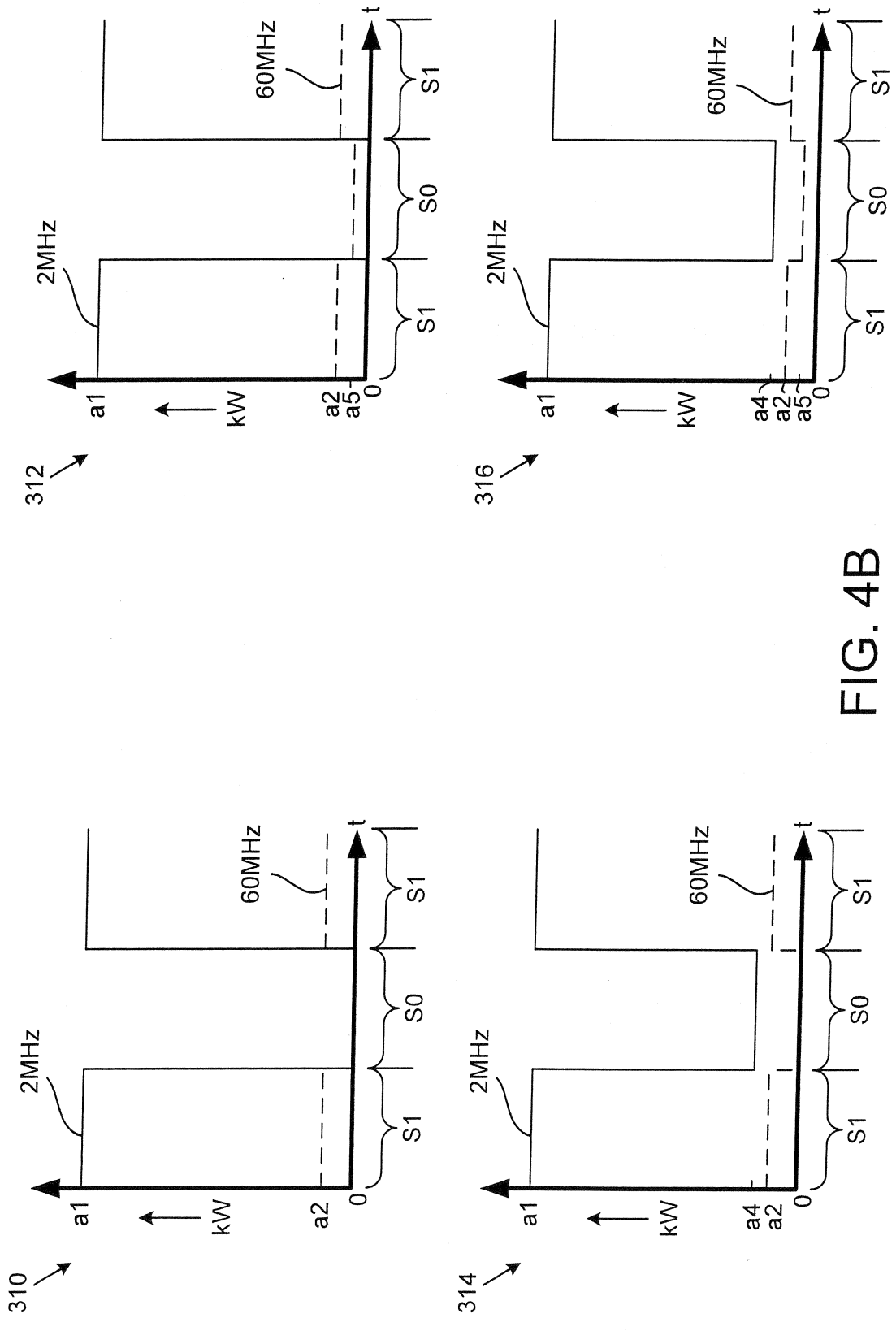

FIG. 4B

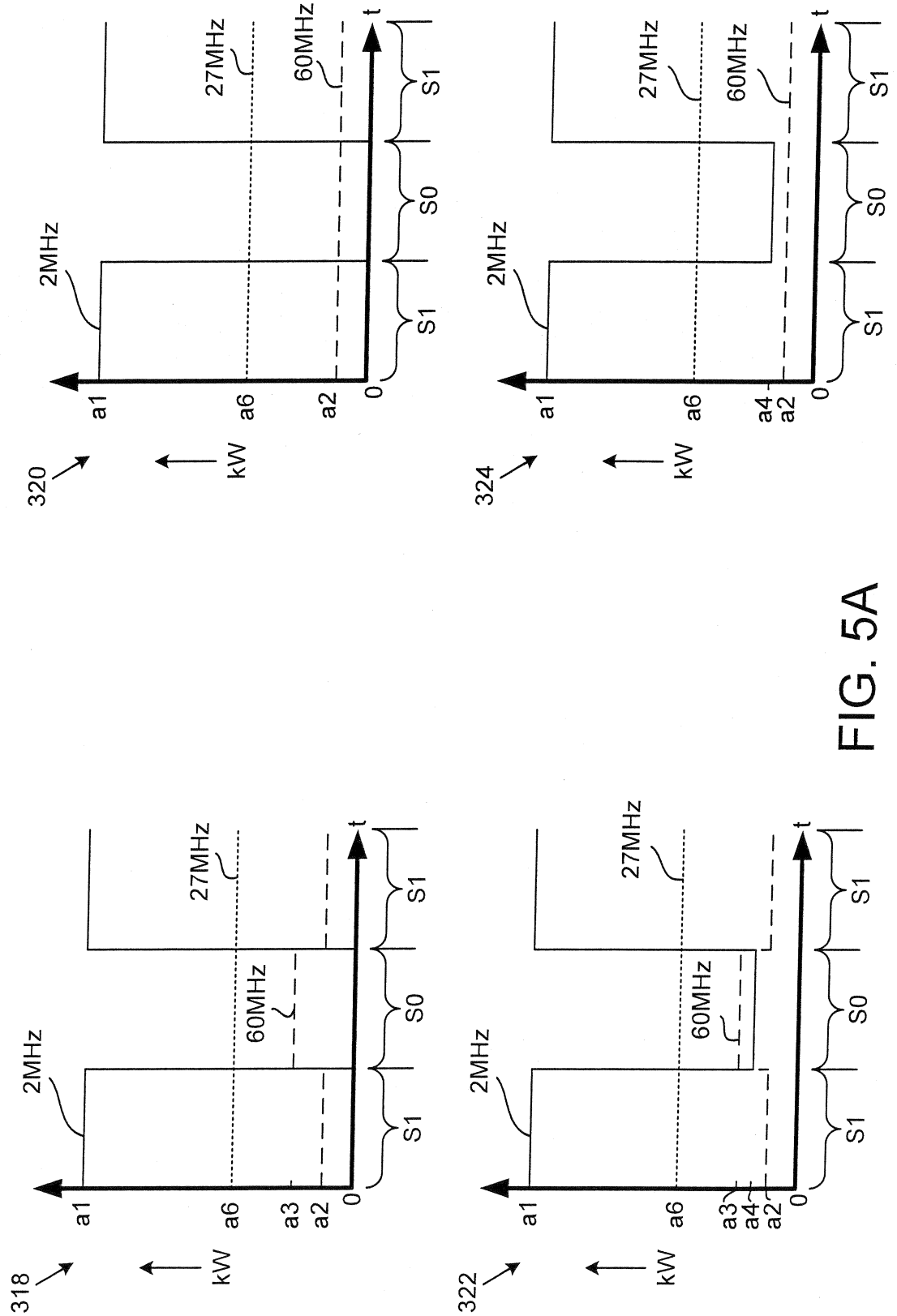
318
kW
a1
a6
a3
a2
0
t
2MHz
27MHz
60MHz
S1
S0
S1
320
kW
a1
a6
a2
0
t
2MHz
27MHz
60MHz
S1
S0
S1
322
kW
a1
a6
a3
a4
a2
0
t
2MHz
27MHz
60MHz
S1
S0
S1
324
kW
a1
a6
a4
a2
0
t
2MHz
27MHz
60MHz
S1
S0
S1

FIG. 5A

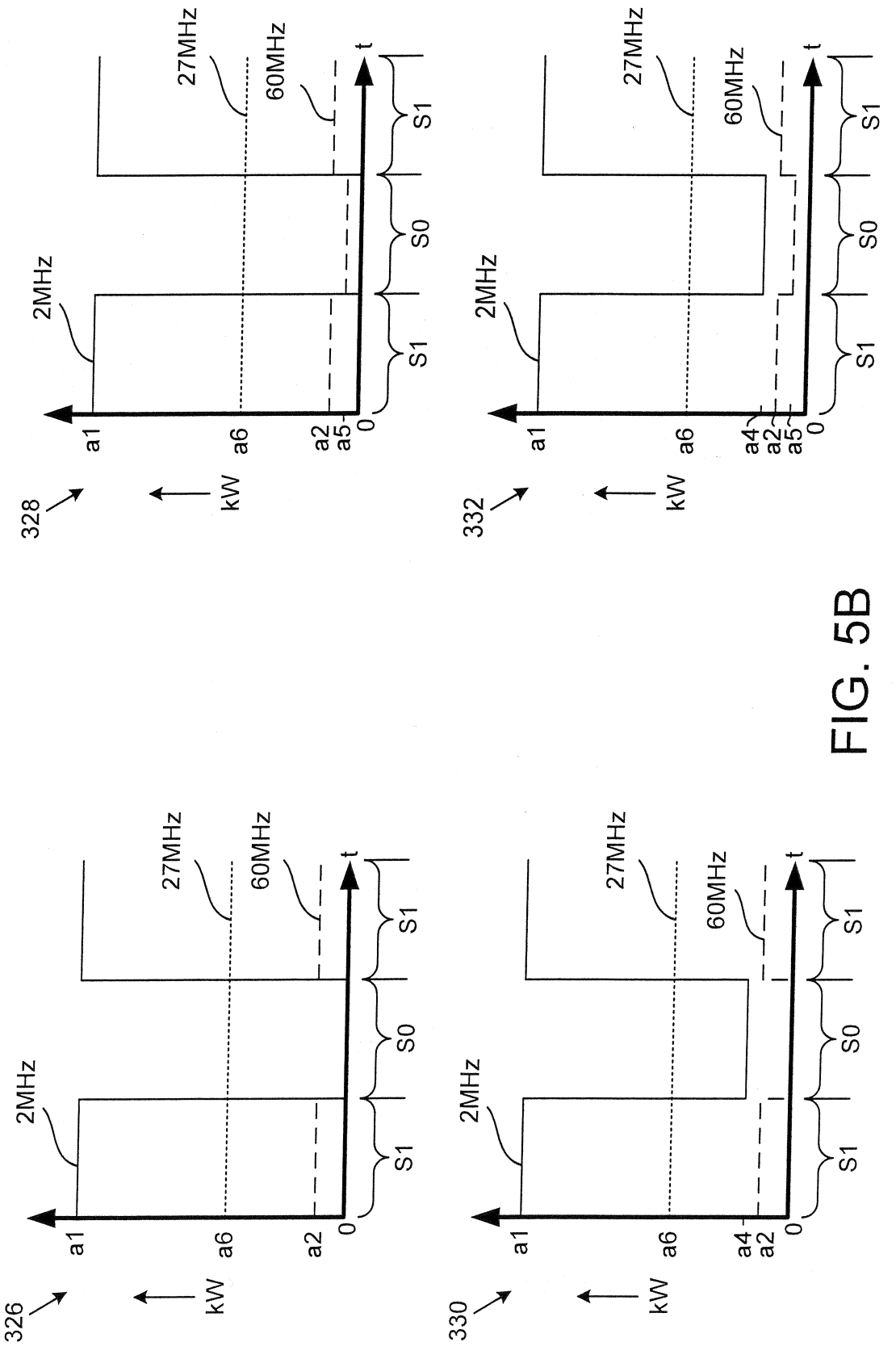

FIG. 5B

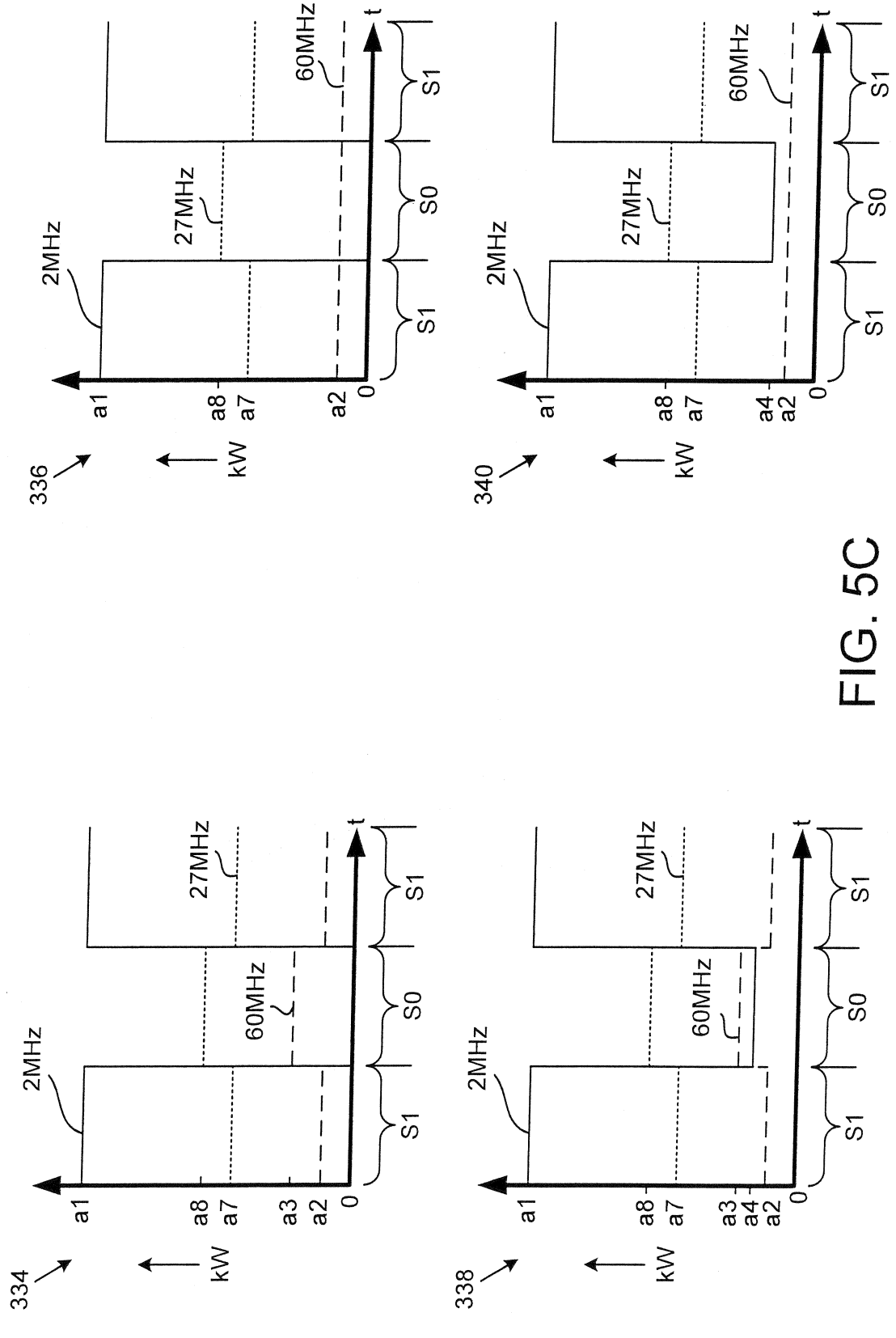
334
kW
a1
a8
a7
a3
a2
0
t
2MHz
27MHz
60MHz
S1
S0
S1
336
kW
a1
a8
a7
a2
0
t
2MHz
27MHz
60MHz
S1
S0
S1
338
kW
a1
a8
a7
a3
a4
a2
0
t
2MHz
27MHz
60MHz
S1
S0
S1
340
kW
a1
a8
a7
a4
a2
0
t
2MHz
27MHz
60MHz
S1
S0
S1

FIG. 5C

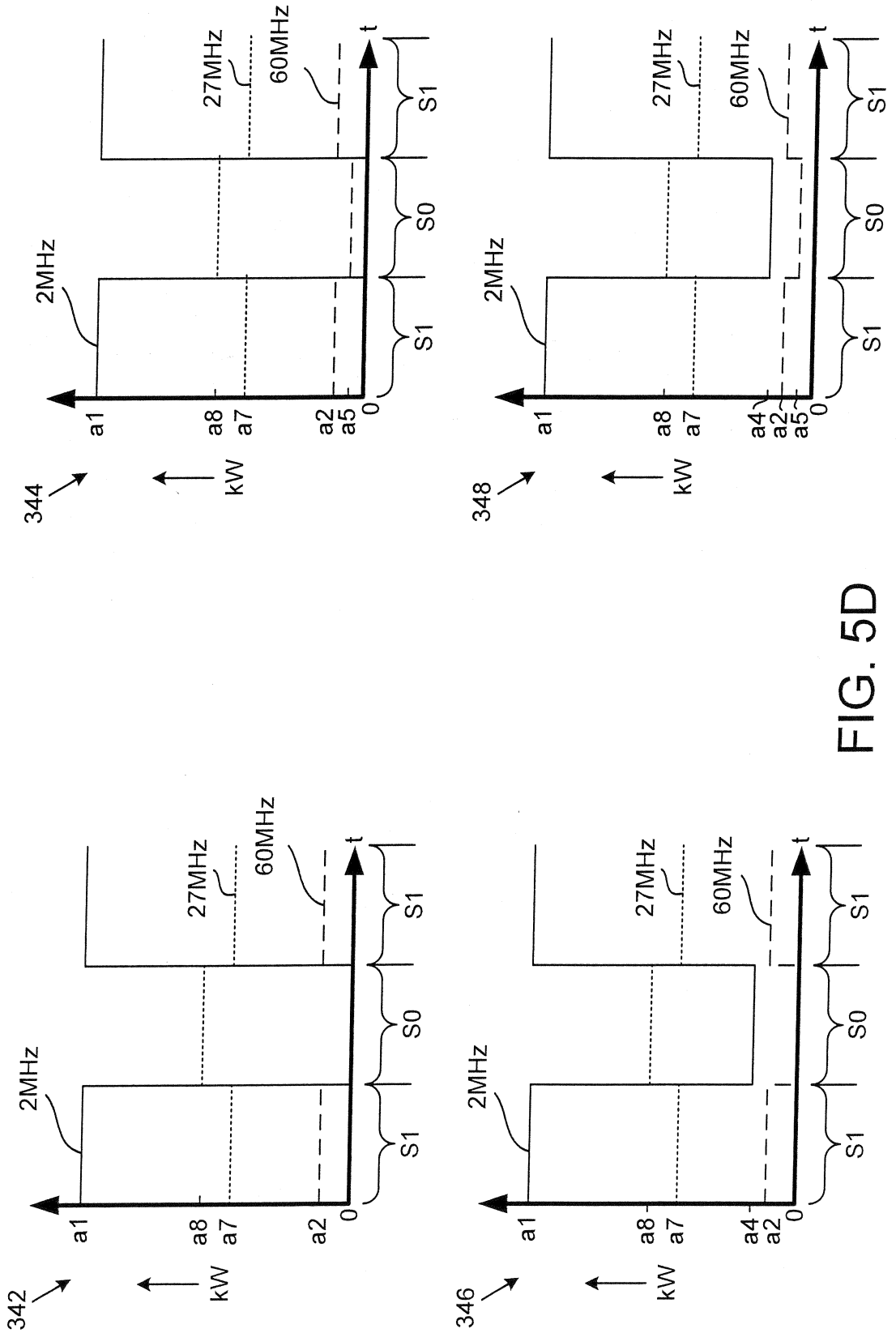

FIG. 5D

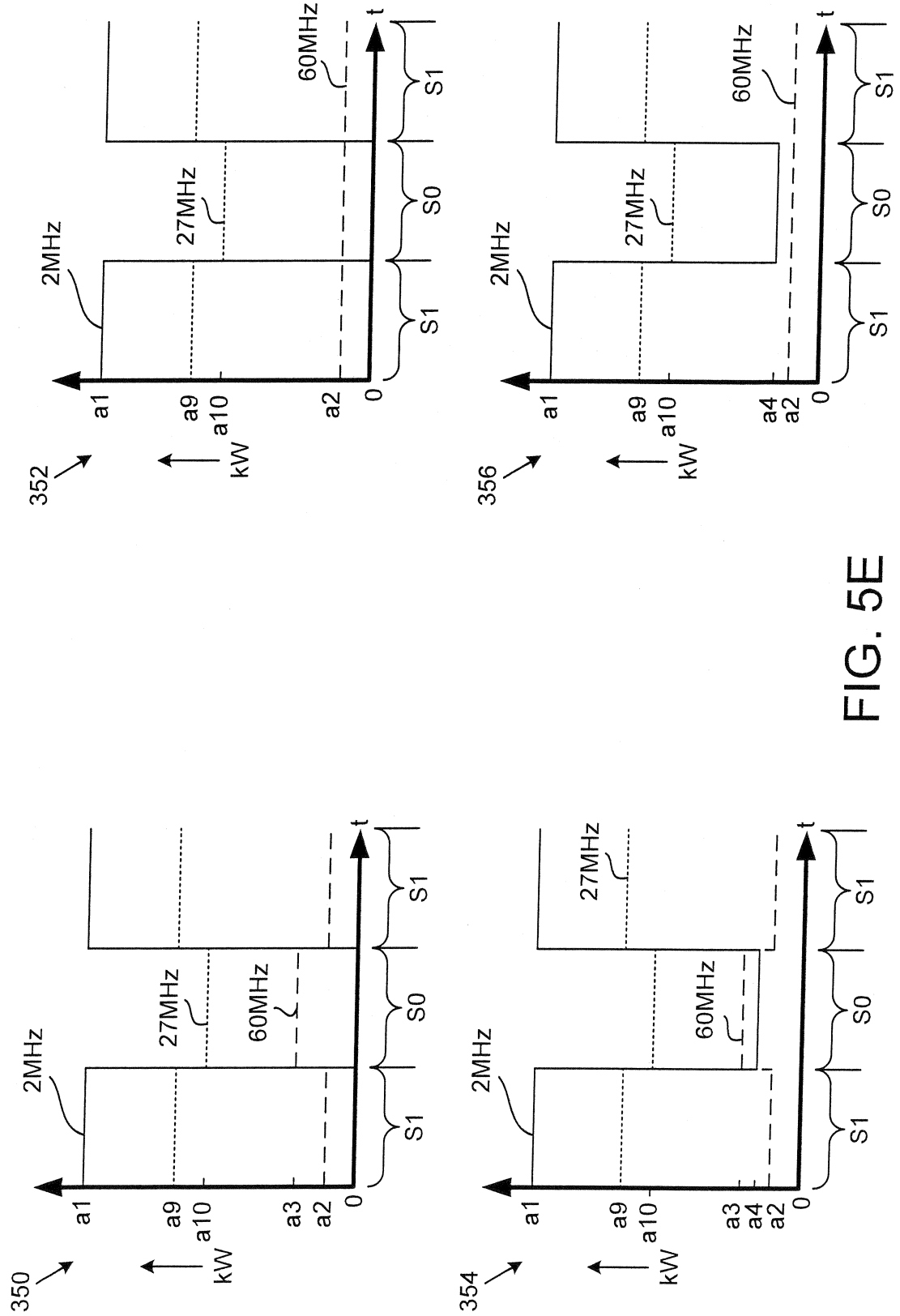

FIG. 5E

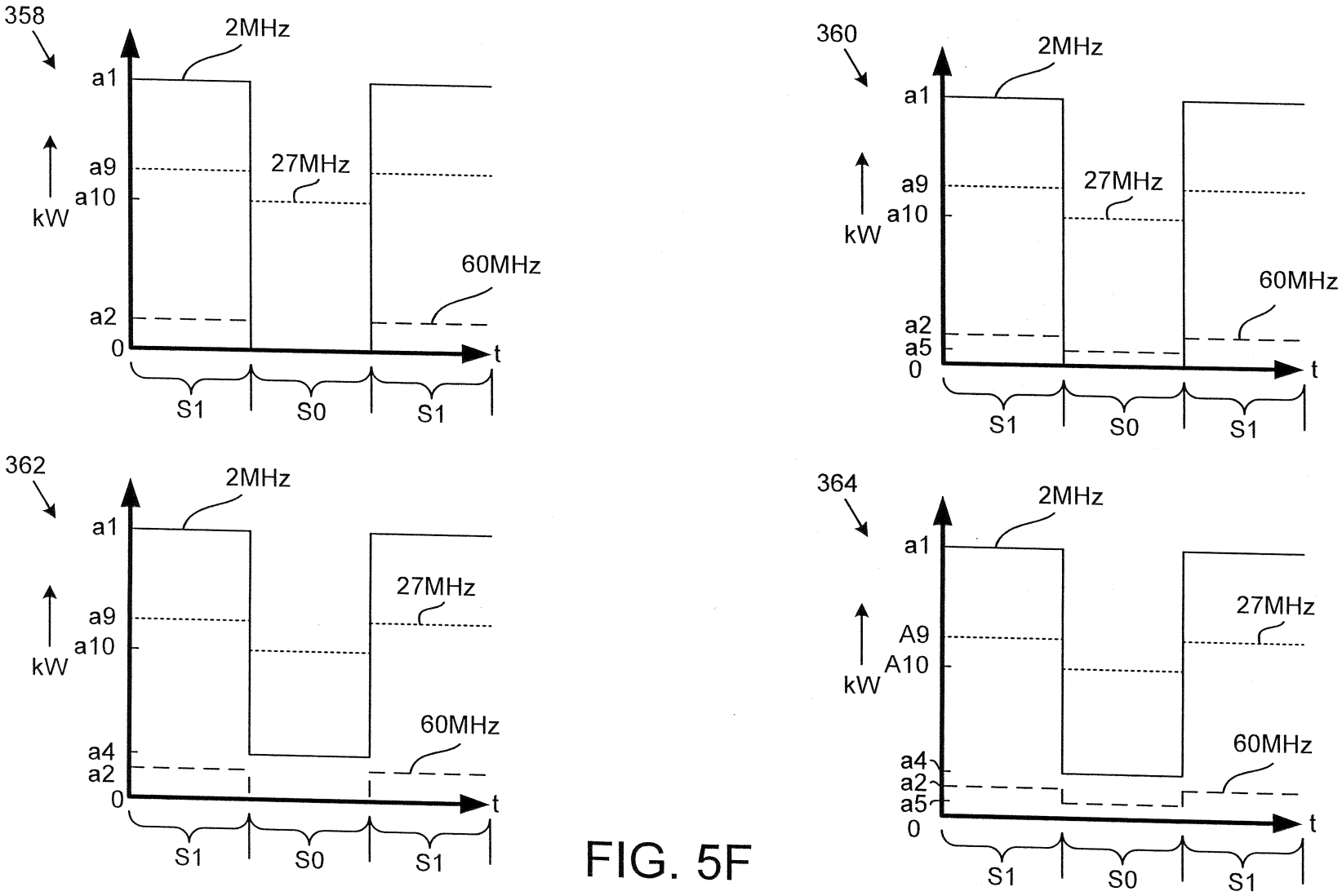
358
2MHz
a1
a9
a10
kW
27MHz
60MHz
a2
0
t
S1
S0
S1
360
2MHz
a1
a9
a10
kW
27MHz
60MHz
a2
a5
0
t
S1
S0
S1
362
2MHz
a1
a9
a10
kW
27MHz
60MHz
a4
a2
0
t
S1
S0
S1
364
2MHz
a1
A9
A10
kW
27MHz
60MHz
a4
a2
a5
0
t
S1
S0
S1

FIG. 5F

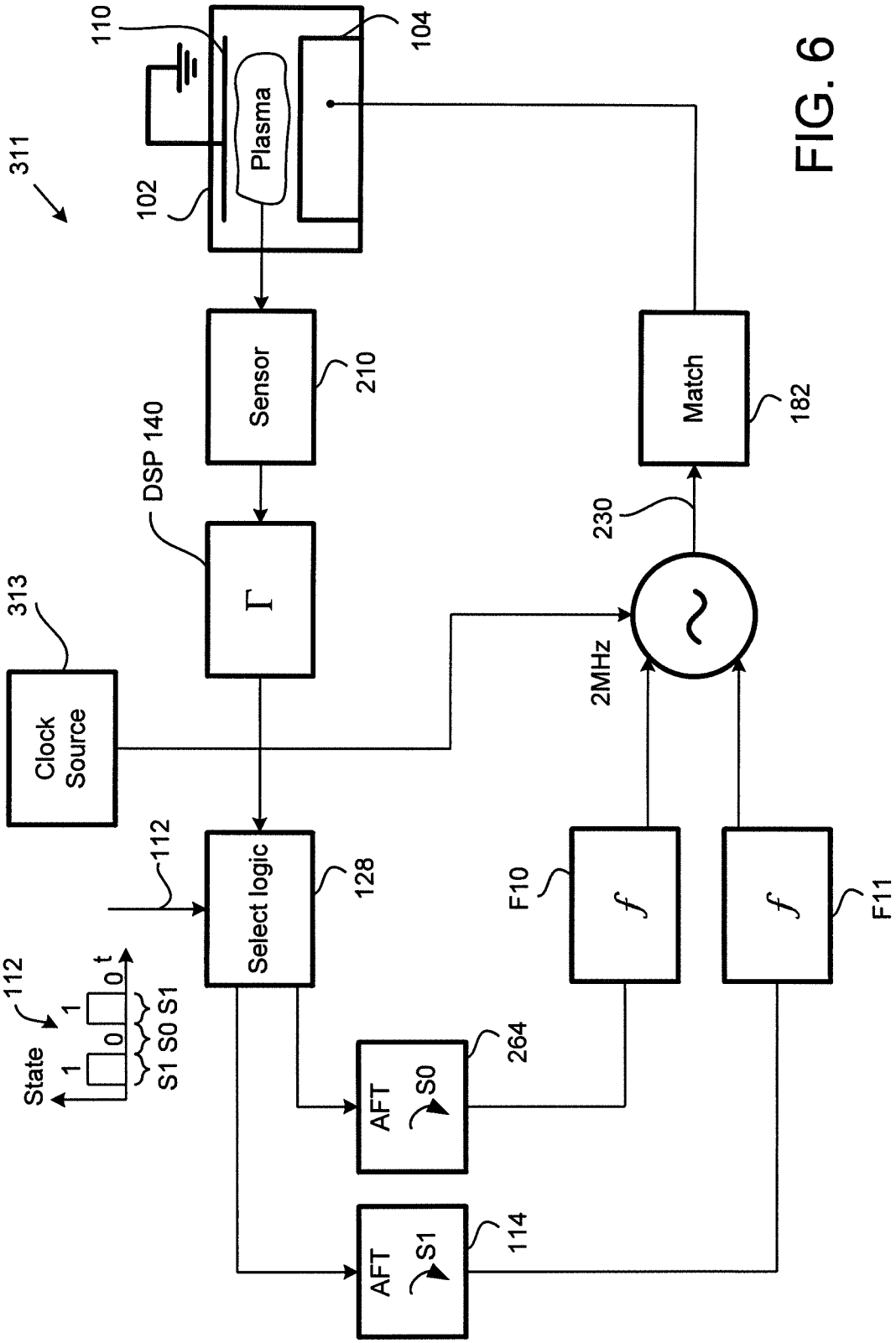
311
110
Plasma
104
102
Sensor
210
DSP 140
Γ
313
Clock Source
112
Select logic
128
112
State
1
0
1
0
t
S1 S0 S1
AFT
S0
264
AFT
S1
114
F10
f
f
F11
2MHz
230
Match
182

FIG. 6

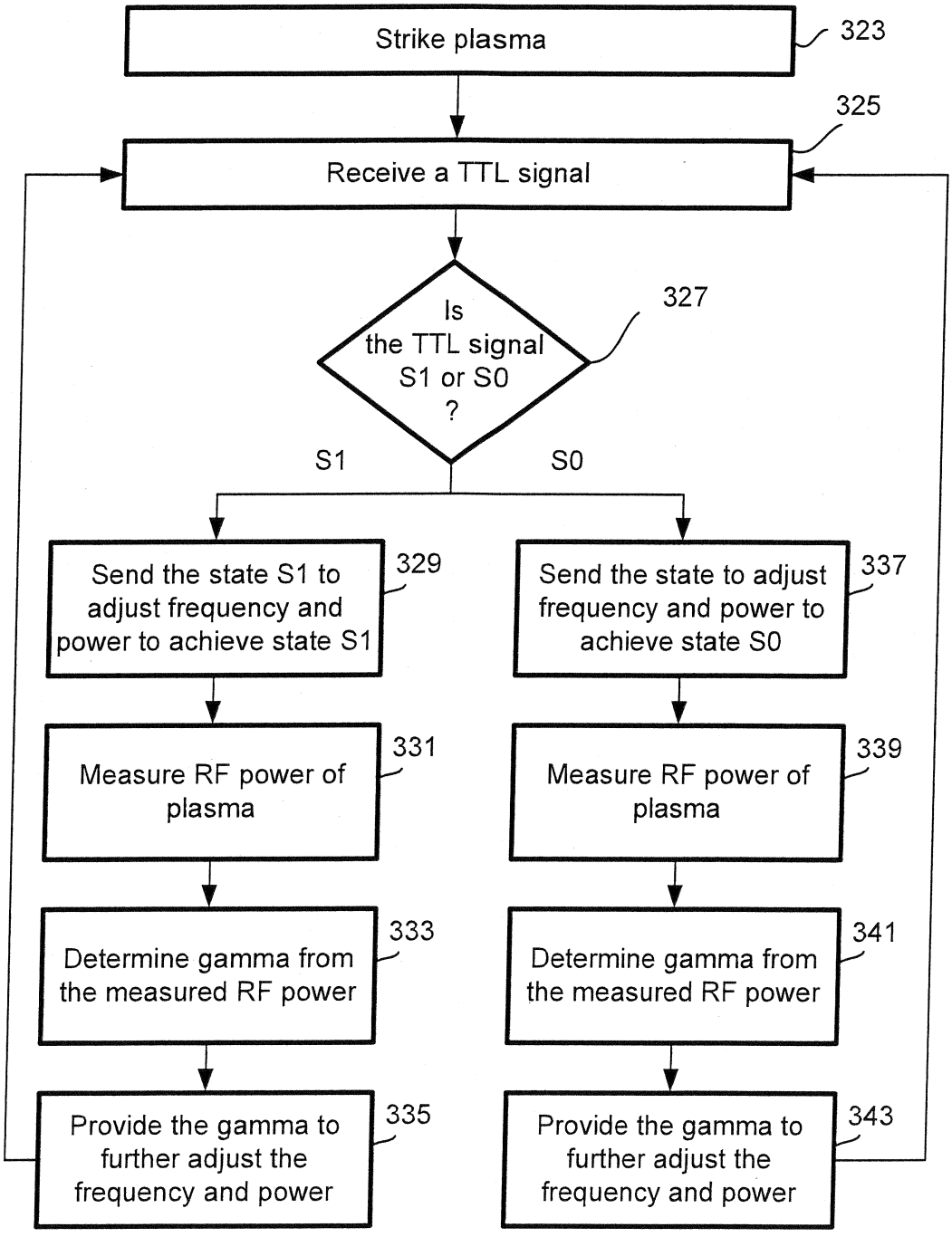
Strike plasma
323
325
Receive a TTL signal
Is the TTL signal S1 or S0 ?
327
S1
S0
Send the state S1 to adjust frequency and power to achieve state S1
329
Measure RF power of plasma
331
Determine gamma from the measured RF power
333
Provide the gamma to further adjust the frequency and power
335
Send the state to adjust frequency and power to achieve state S0
337
Measure RF power of plasma
339
Determine gamma from the measured RF power
341
Provide the gamma to further adjust the frequency and power
343

FIG. 7

321