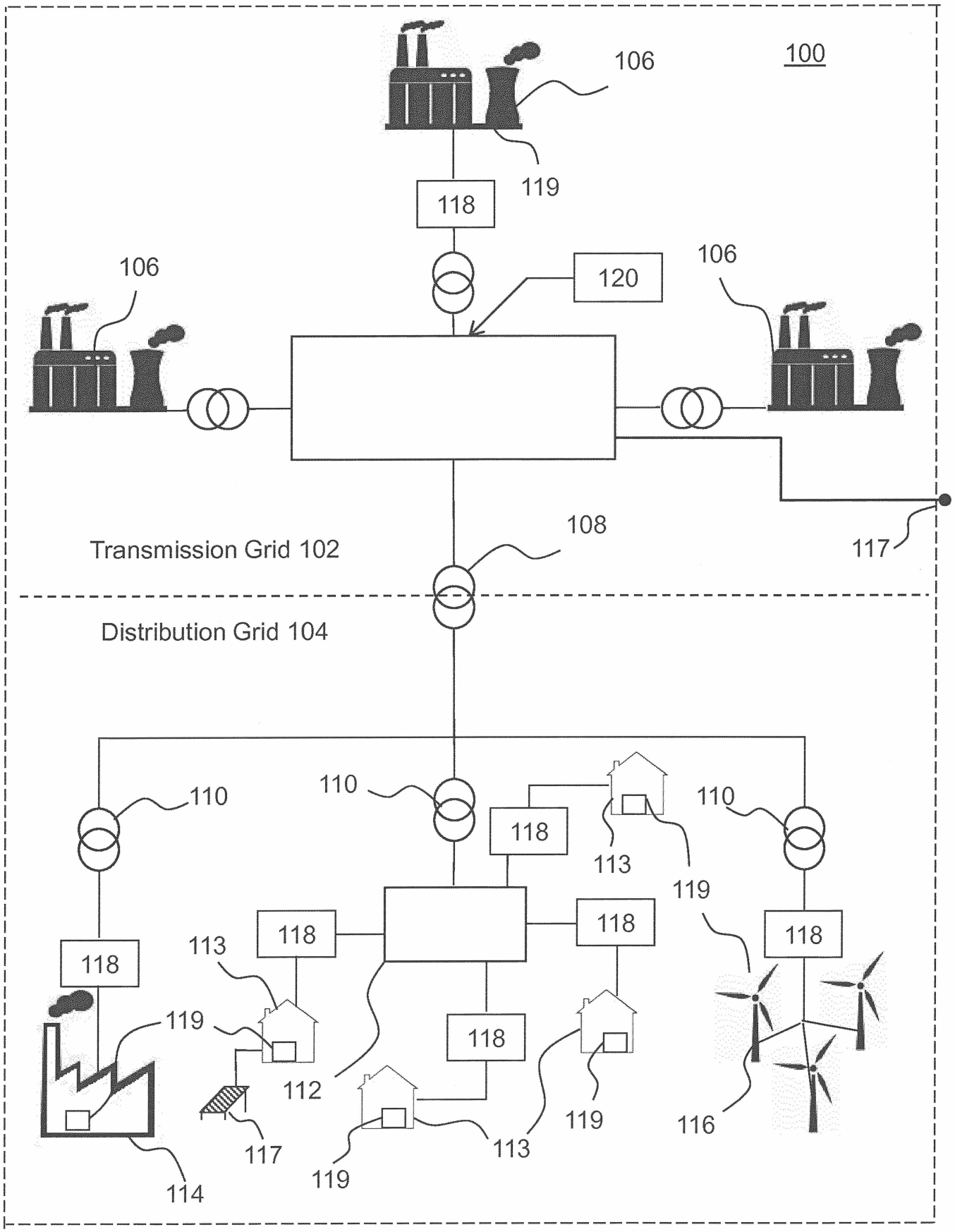
100
106
119
118
120
106
106
108
117
Transmission Grid 102
Distribution Grid 104
110
110
110
118
113
119
118
118
118
118
113
119
118
112
119
116
117
113
119
114

Figure 1

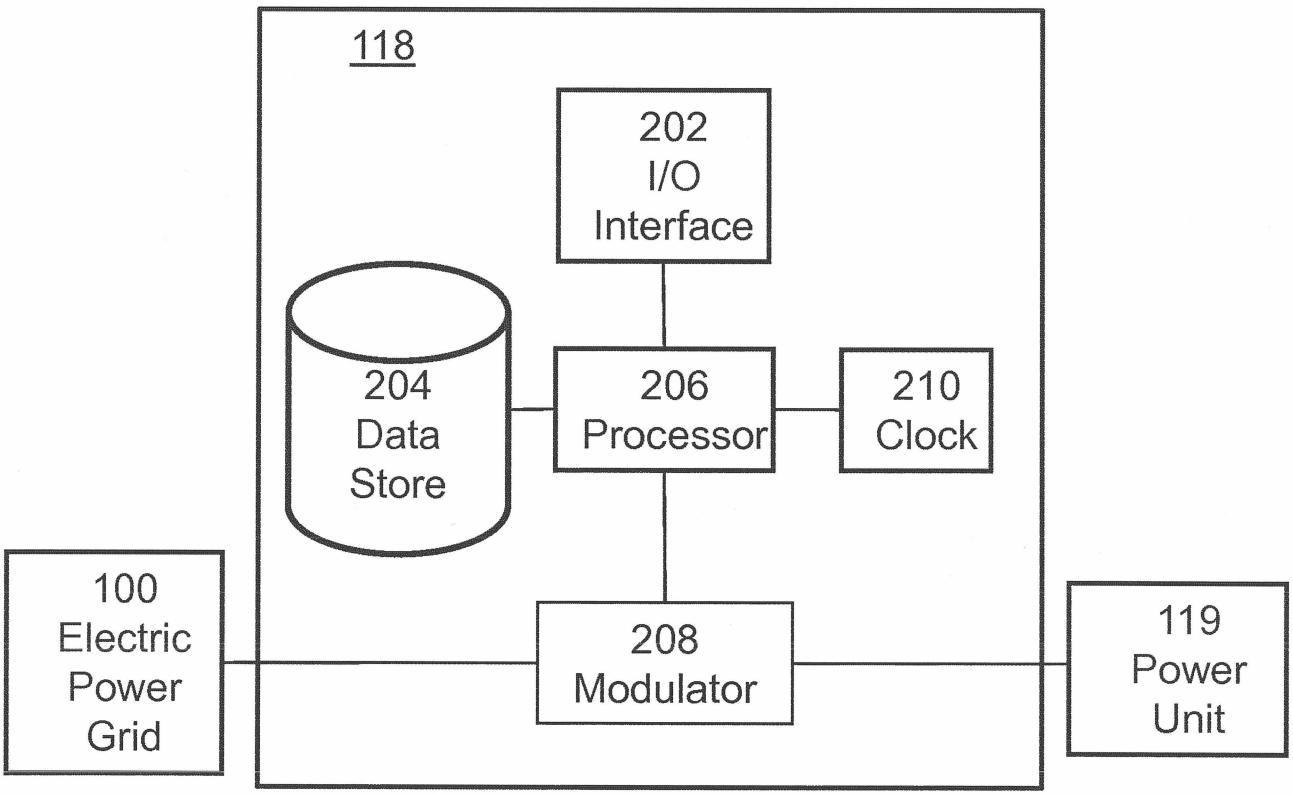
118
202
I/O
Interface
204
Data
Store
206
Processor
210
Clock
100
Electric
Power
Grid
208
Modulator
119
Power
Unit

Figure 2a

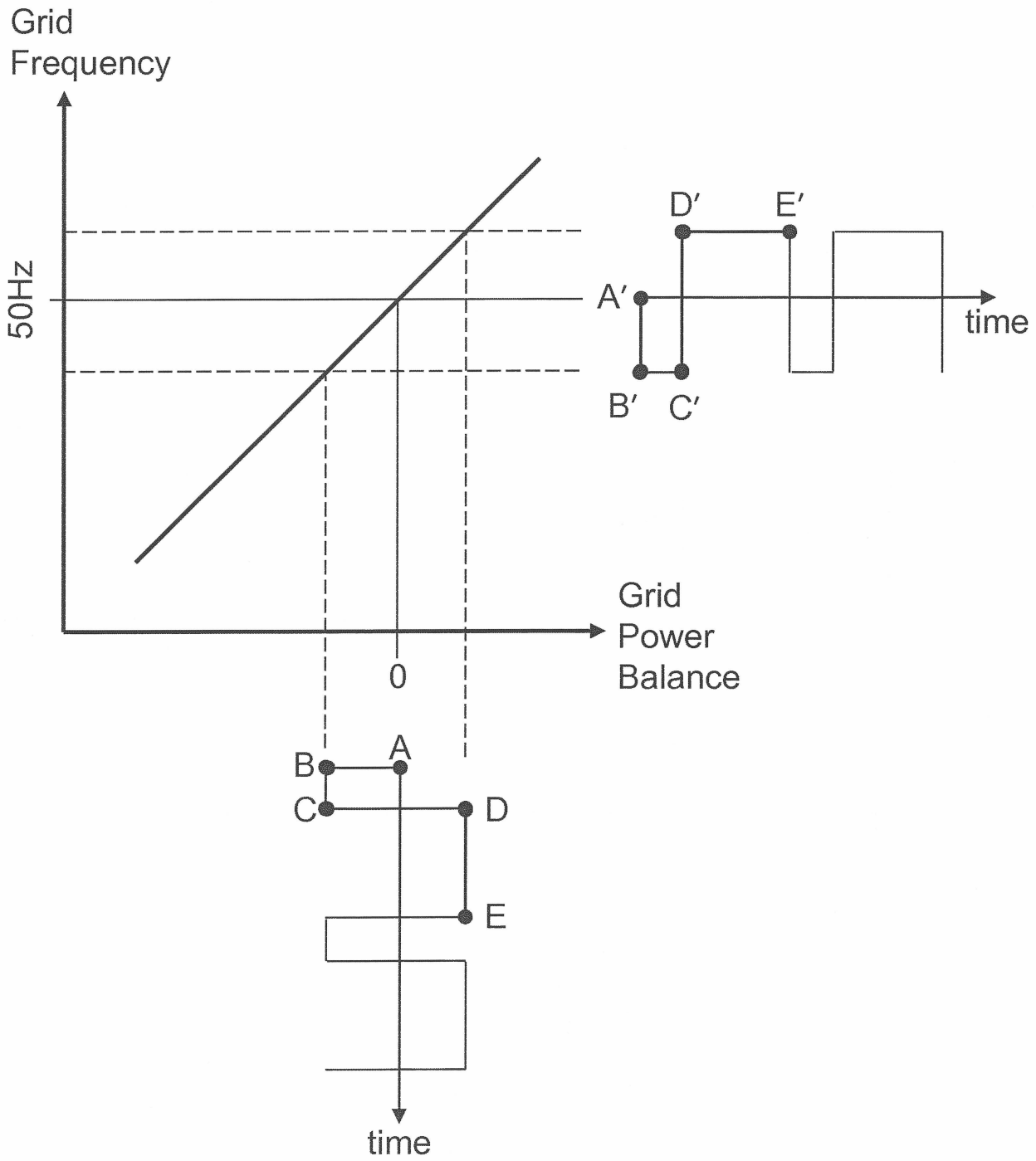
Grid
Frequency
50Hz
D′
E′
A′
time
B′
C′
Grid
Power
Balance
0
B
A
C
D
E
time

Figure 2b

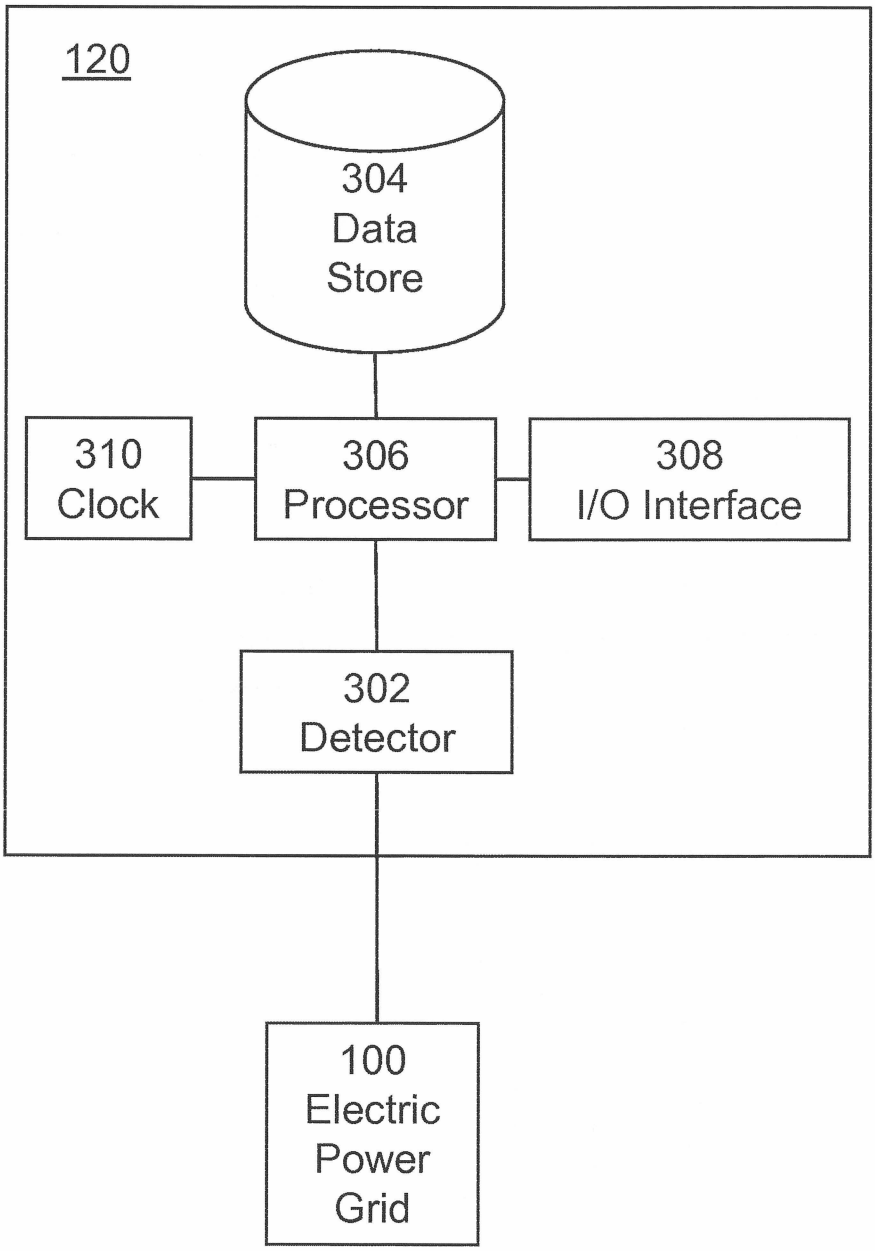
120
304
Data
Store
310
Clock
306
Processor
308
I/O Interface
302
Detector
100
Electric
Power
Grid

Figure 3

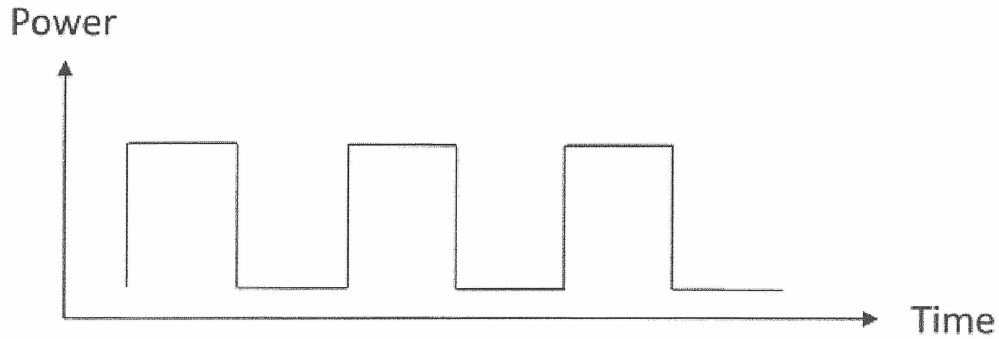

Figure 4a

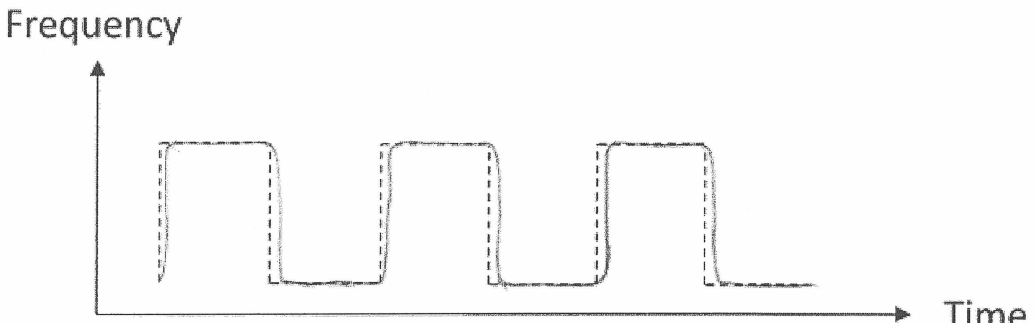

Figure 4b

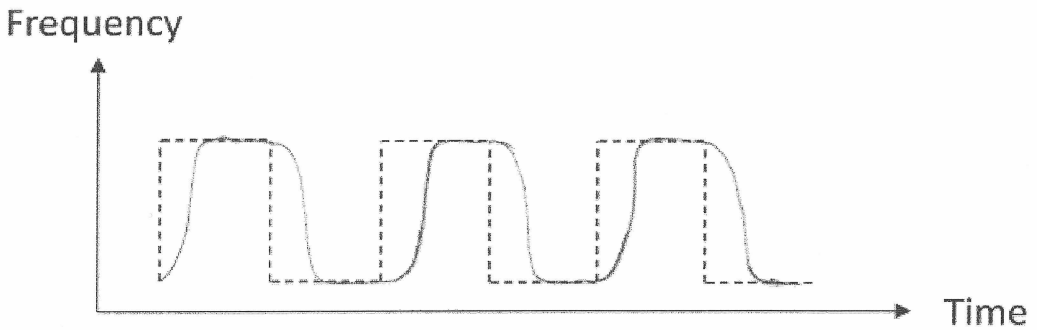

Figure 4c

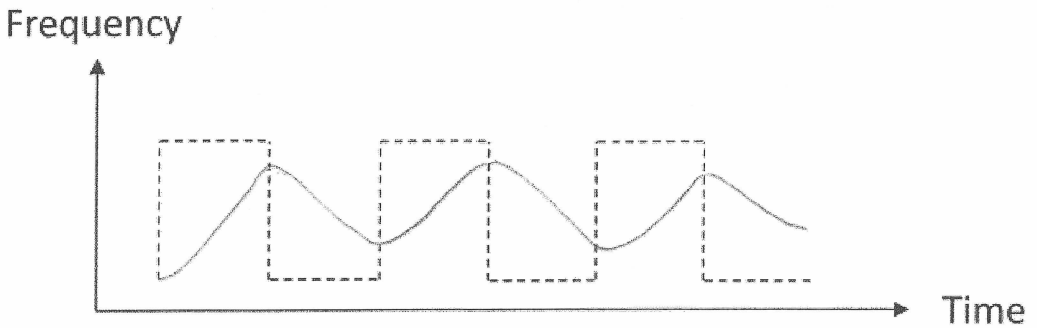

Figure 4d

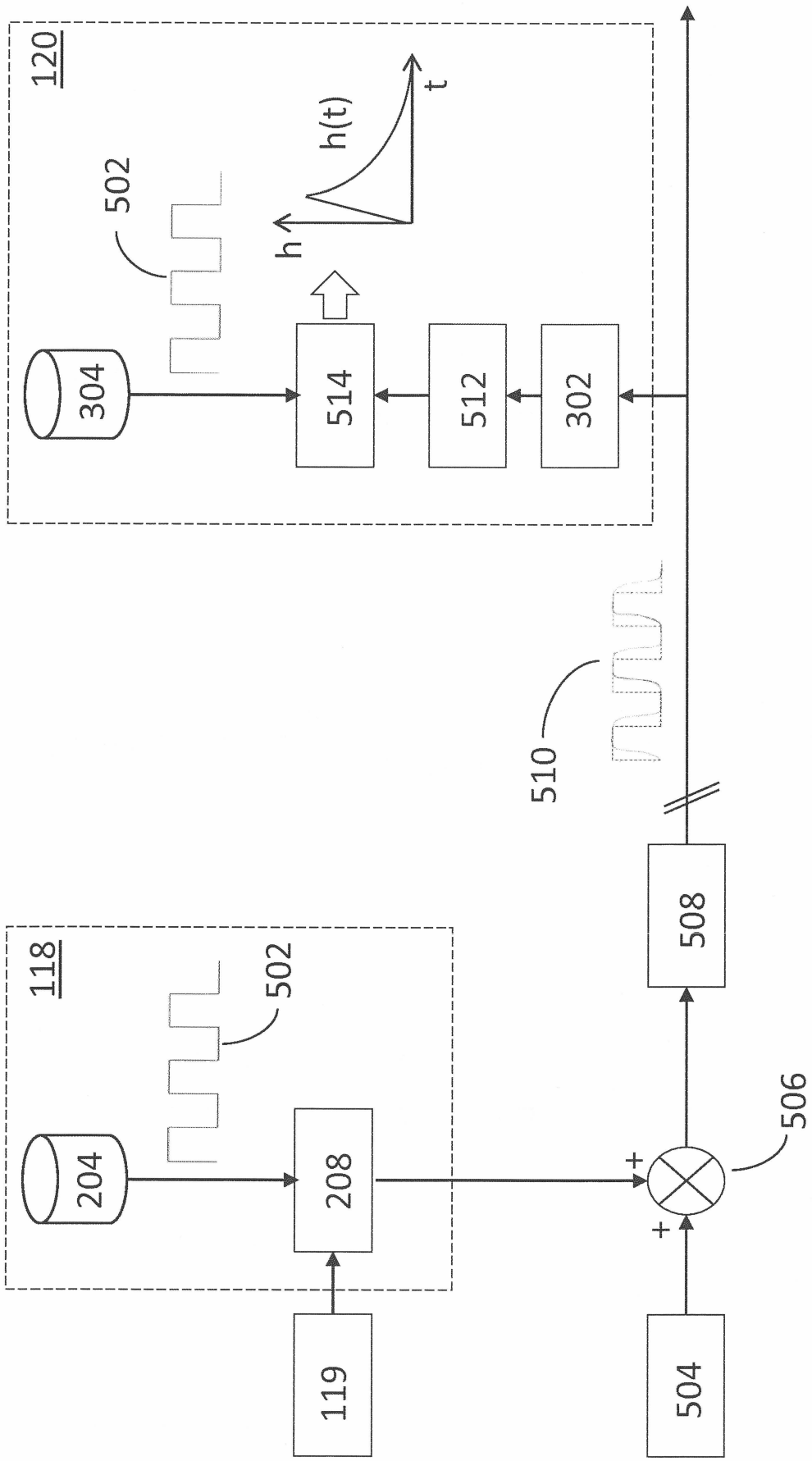

Figure 5

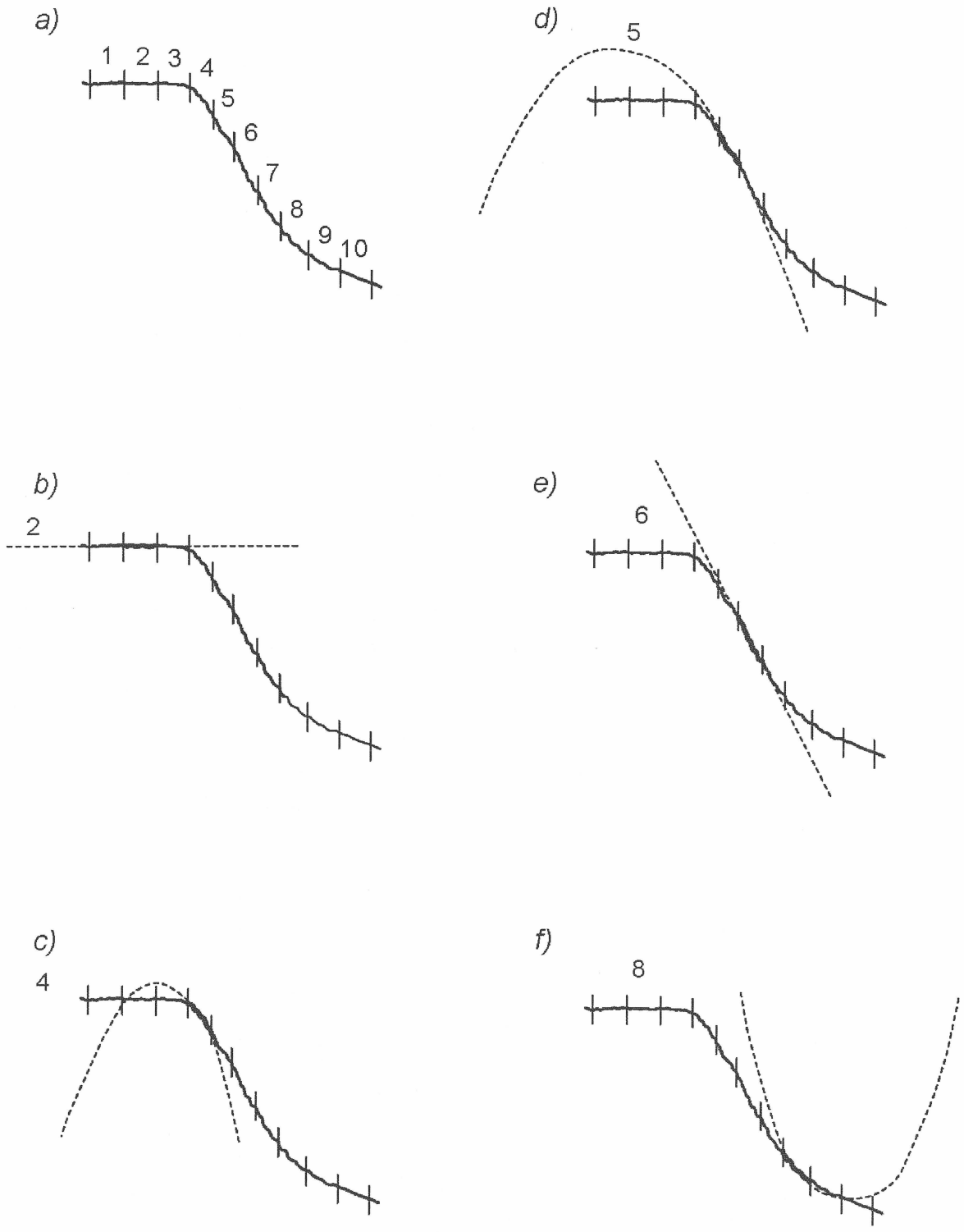

Figure 6

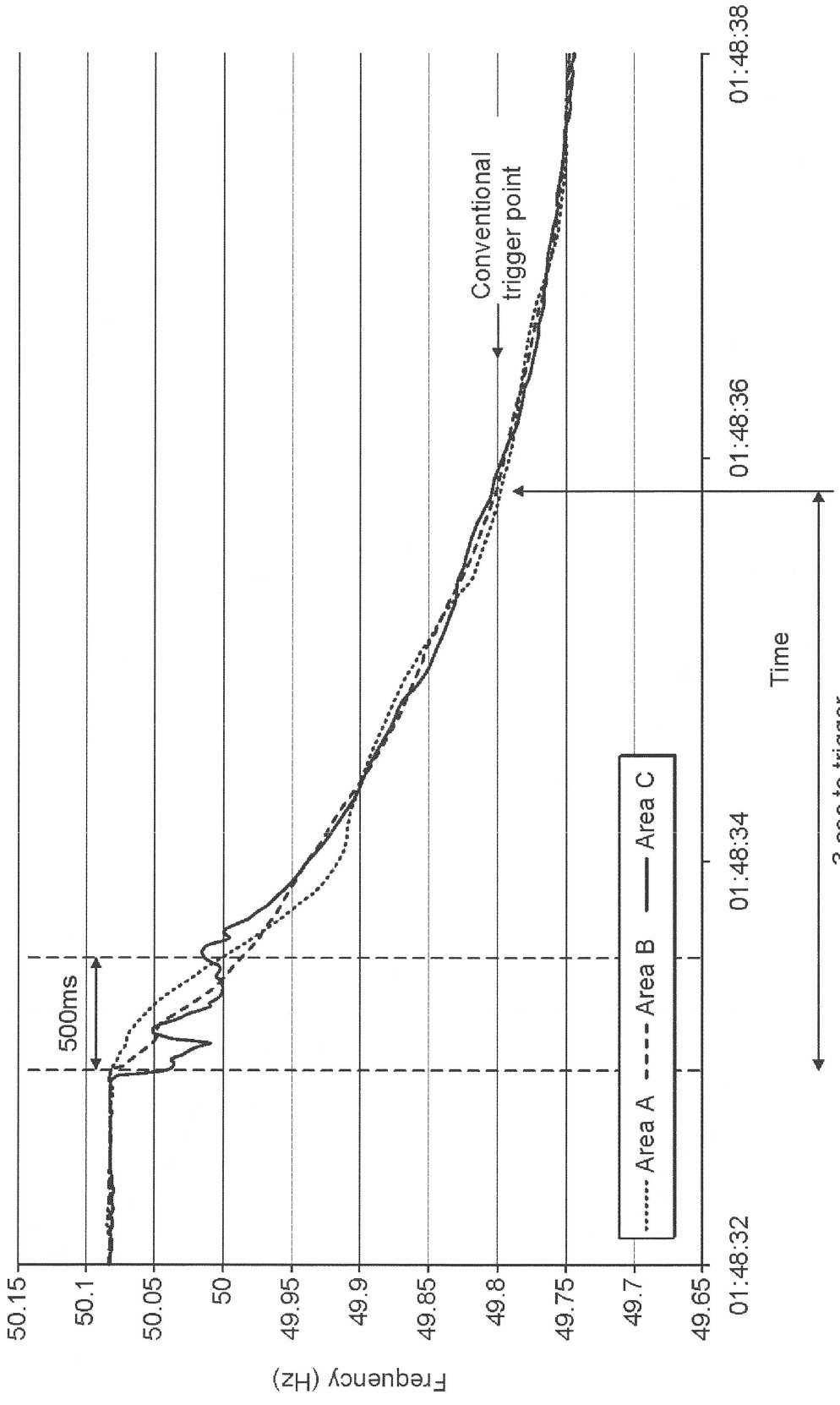
50.15
50.1
50.05
50
49.95
49.9
49.85
49.8
49.75
49.7
49.65
Frequency (Hz)
500ms
Conventional
trigger point
Area A
Area B
Area C
01:48:32
01:48:34
01:48:36
01:48:38
Time
3 sec to trigger

Figure 7

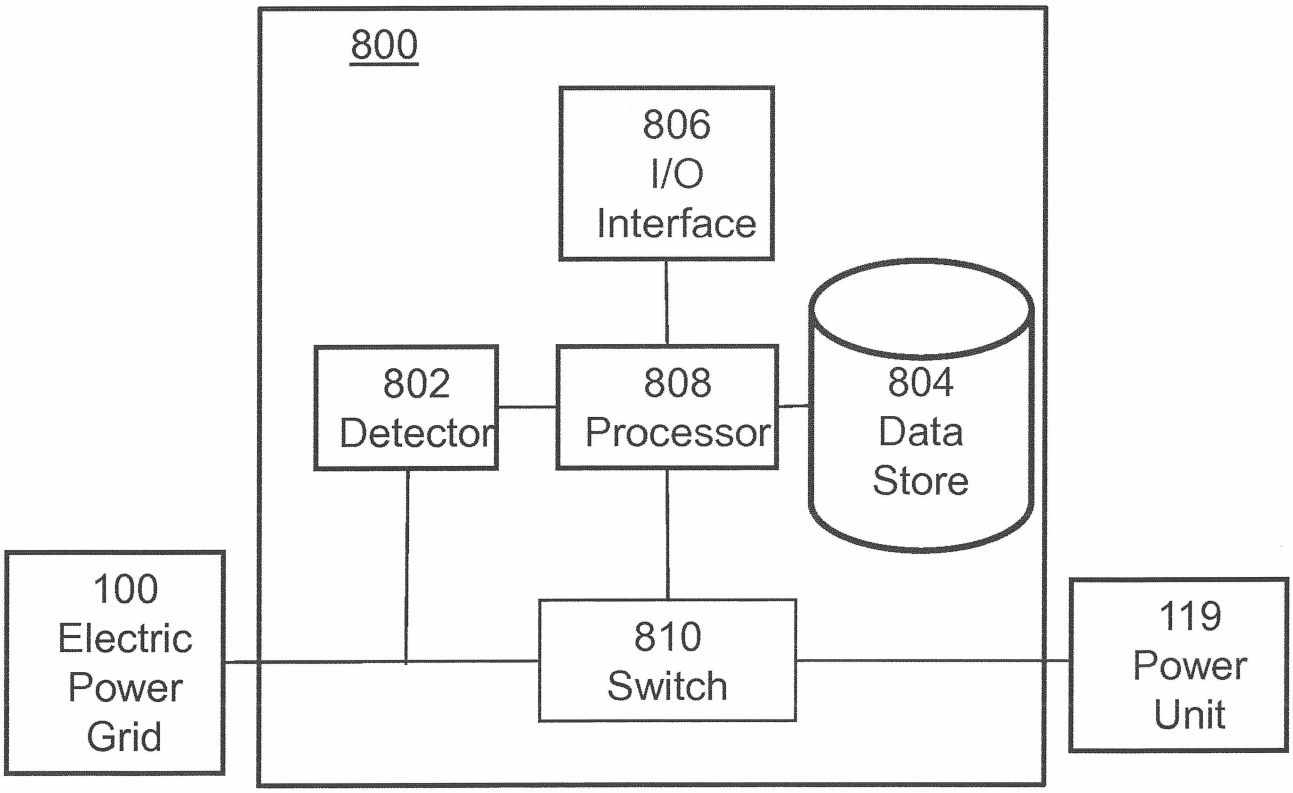
800
806
I/O
Interface
802
Detector
808
Processor
804
Data
Store
100
Electric
Power
Grid
810
Switch
119
Power
Unit

Figure 8