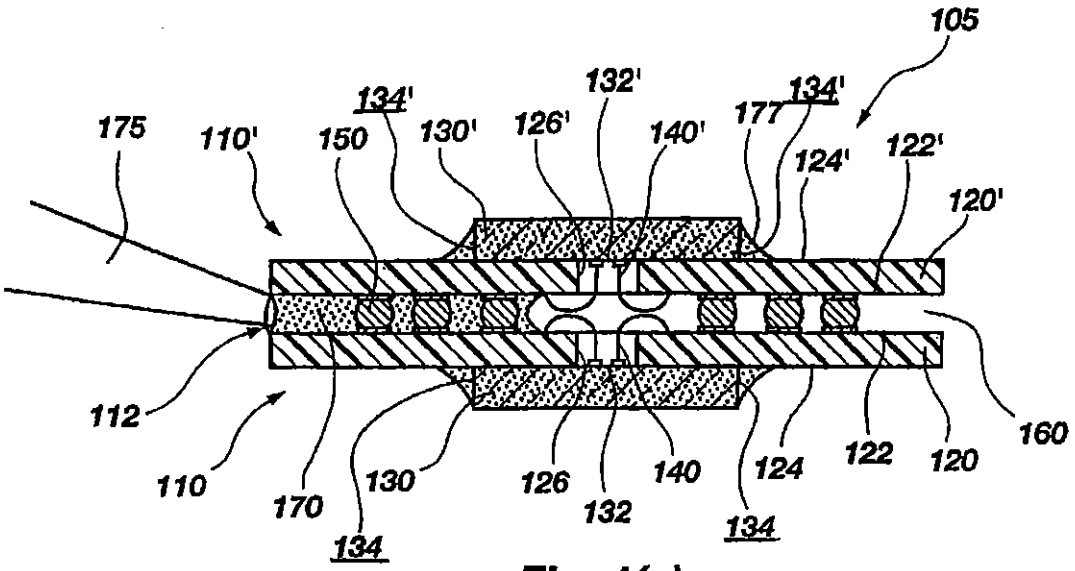
105
175
110'
134'
150
130'
126'
132'
140'
177
134'
124'
122'
120'
112
110
170
130
134
126
132
140
134
124
122
120
160

Fig. 1(c)

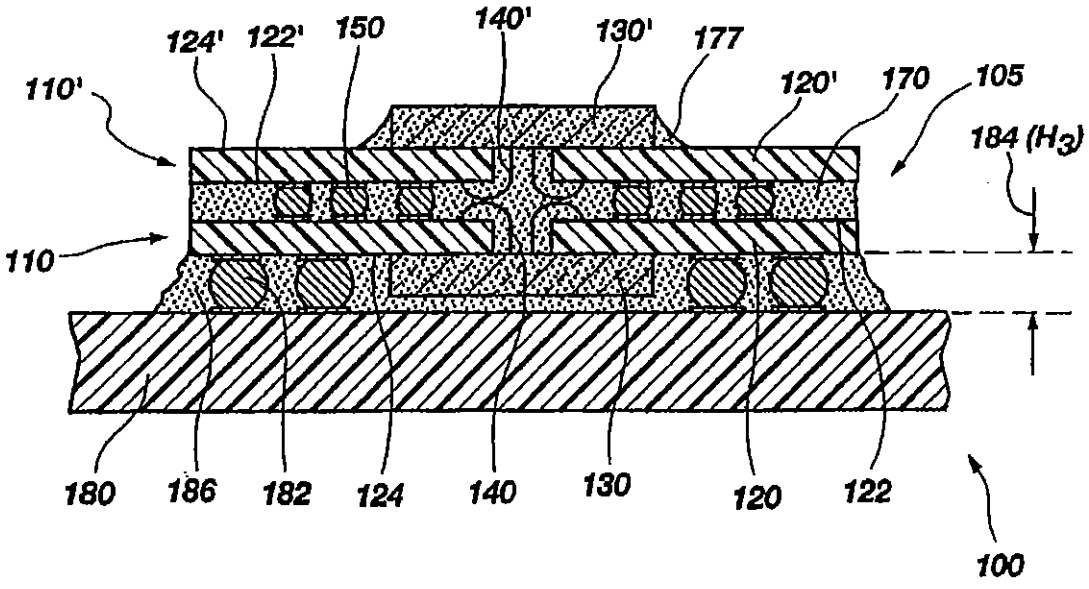
124'
122'
150
140'
130'
177
110'
120'
170
105
184 (H_3)
110
180
186
182
124
140
130
120
122
100

Fig. 1(d)