(12) INTERNATIONAL APPLICATION PUBLISHED UNDER THE PATENT COOPERATION TREATY (PCT)

(19) World Intellectual Property Organization
International Bureau

(43) International Publication Date
4 June 2009 (04.06.2009)

PCT

(10) International Publication Number
WO 2009/070563 A1

(51) International Patent Classification:
F23D 3/00 (2006.01)

(21) International Application Number:
PCT/US2008/084637

(22) International Filing Date:
25 November 2008 (25.11.2008)

(25) Filing Language: English

(26) Publication Language: English

(30) Priority Data:
11/945,775 27 November 2007 (27.11.2007) US
12/273,367 18 November 2008 (18.11.2008) US

(71) Applicant *(for all designated States except US)*: **JOHN ZINK COMPANY, LLC** [US/US]; 1920 East Apache, Tulsa, OK 74116 (US).

(72) Inventors; and
(75) Inventors/Applicants *(for US only)*: **JOHNSON, Bruce, Carlyle** [US/US]; 2304 W. Quincy Street, Broken Arrow, OK 74012 (US). **PETERSEN, Nathan, Steneck** [US/US]; 4709 S. 175th E. Avenue, Tulsa, OK 74134 (US).

(74) Agent: **HURD, Michael, B.**; Hovey Williams LLP, 10801 Mastin Blvd. Suite 1000, 84 Corporate Woods, Overland Park, KS 66210 (US).

(81) Designated States *(unless otherwise indicated, for every kind of national protection available)*: AE, AG, AL, AM, AO, AT, AU, AZ, BA, BB, BG, BH, BR, BW, BY, BZ, CA, CH, CN, CO, CR, CU, CZ, DE, DK, DM, DO, DZ, EC, EE, EG, ES, FI, GB, GD, GE, GH, GM, GT, HN, HR, HU, ID, IL, IN, IS, JP, KE, KG, KM, KN, KP, KR, KZ, LA, LC, LK, LR, LS, LT, LU, LY, MA, MD, ME, MG, MK, MN, MW, MX, MY, MZ, NA, NG, NI, NO, NZ, OM, PG, PH, PL, PT, RO, RS, RU, SC, SD, SE, SG, SK, SL, SM, ST, SV, SY, TJ, TM, TN, TR, TT, TZ, UA, UG, US, UZ, VC, VN, ZA, ZM, ZW.

(84) Designated States *(unless otherwise indicated, for every kind of regional protection available)*: ARIPO (BW, GH, GM, KE, LS, MW, MZ, NA, SD, SL, SZ, TZ, UG, ZM, ZW), Eurasian (AM, AZ, BY, KG, KZ, MD, RU, TJ, TM), European (AT, BE, BG, CH, CY, CZ, DE, DK, EE, ES, FI, FR, GB, GR, HR, HU, IE, IS, IT, LT, LU, LV, MC, MT, NL, NO, PL, PT, RO, SE, SI, SK, TR), OAPI (BF, BJ, CF, CG, CI, CM, GA, GN, GQ, GW, ML, MR, NE, SN, TD, TG).

Declarations under Rule 4.17:
— *as to applicant's entitlement to apply for and be granted a patent (Rule 4.17(ii))*
— *as to the applicant's entitlement to claim the priority of the earlier application (Rule 4.17(iii))*

Published:
— *with international search report*

(54) **Title:** FLAMELESS THERMAL OXIDATION APPARATUS AND METHODS

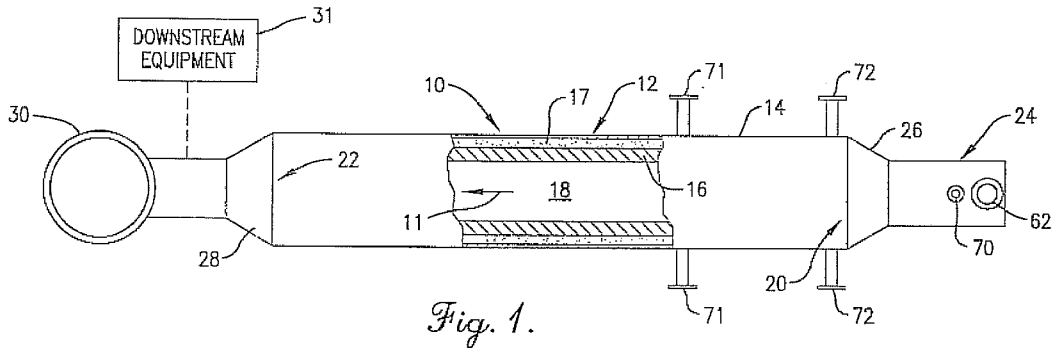

Fig. 1.

(57) **Abstract:** A thermal oxidizer is provided in which off-gases in a process stream are thermally oxidized within substantially the entire interior volume of an oxidation chamber. The thermal oxidation is conducted without the presence of a flame or with only a minor portion of one or more fuels being combusted in a flame.

WO 2009/070563 A1