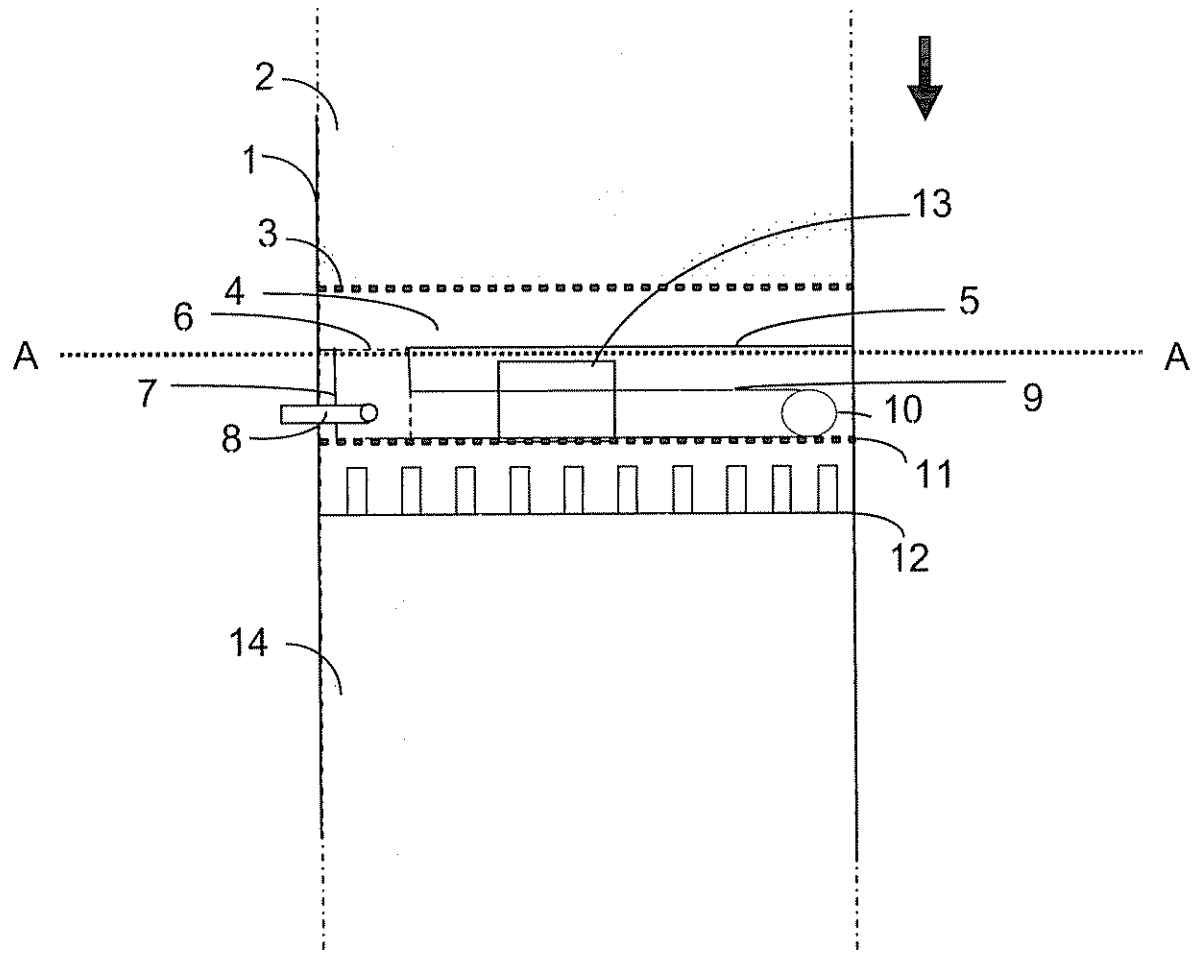

FIG. 1

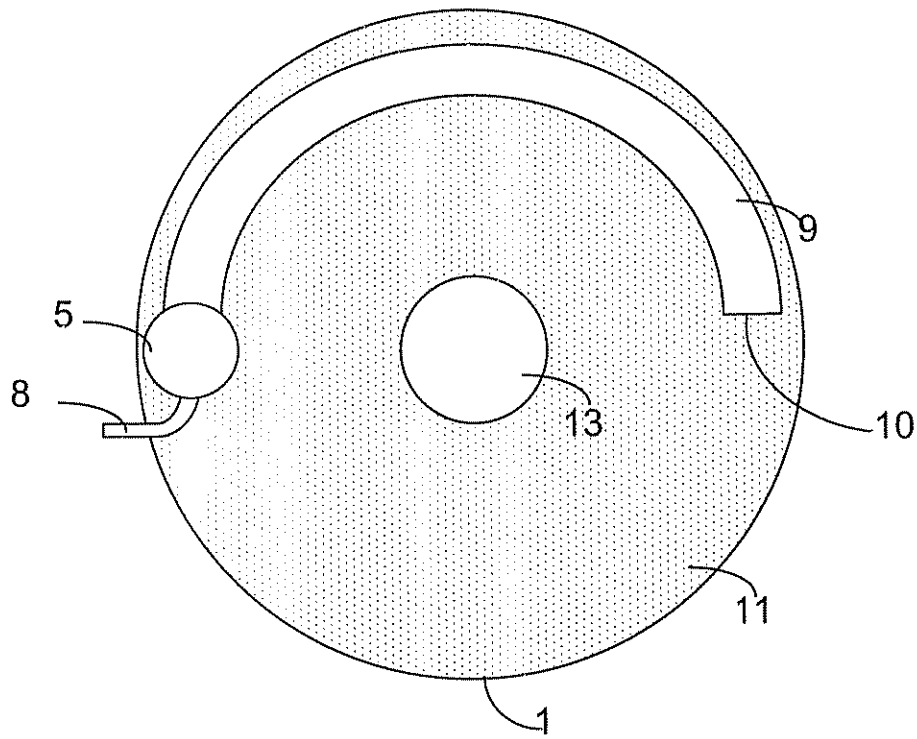

FIG. 2

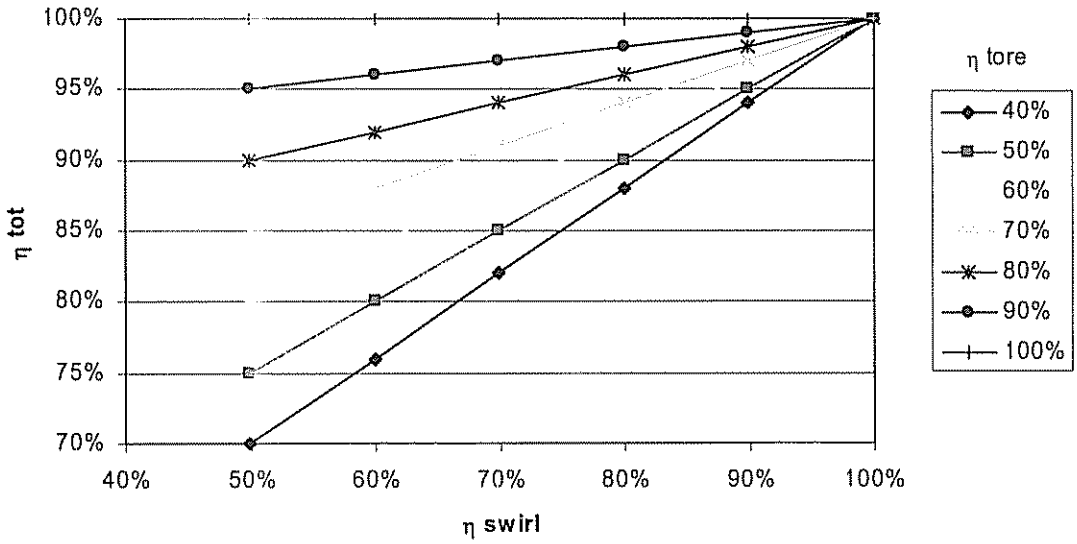
100%
95%
90%
85%
80%
75%
70%
η tot
40%
50%
60%
70%
80%
90%
100%
η swirl
η tore
40%
50%
60%
70%
80%
90%
100%

FIG. 3