(12) INTERNATIONAL APPLICATION PUBLISHED UNDER THE PATENT COOPERATION TREATY (PCT)

(19) World Intellectual Property Organization
International Bureau

(43) International Publication Date
5 November 2015 (05.11.2015)

WIPO | PCT

(10) International Publication Number
WO 2015/167899 A1

(51) International Patent Classification:
B24D 11/02 (2006.01) *B24D 7/02* (2006.01)

(21) International Application Number:
PCT/US2015/027105

(22) International Filing Date:
22 April 2015 (22.04.2015)

(25) Filing Language: English

(26) Publication Language: English

(30) Priority Data:
61/987,728 2 May 2014 (02.05.2014) US

(71) Applicant: **3M INNOVATIVE PROPERTIES COMPANY** [US/US]; 3M Center, Post Office Box 33427, Saint Paul, Minnesota 55133-3427 (US).

(72) Inventors: **GAGLIARDI, John J.**; 3M Center, Post Office Box 33427, Saint Paul, Minnesota 55133-3427 (US). **ROMERO, Vincent D.**; 3M Center, Post Office Box 33427, Saint Paul, Minnesota 55133-3427 (US). **COAD, Eric C.**; 3M Center, Post Office Box 33427, Saint Paul, Minnesota 55133-3427 (US).

(74) Agents: **WRIGHT, Bradford B.** et al.; 3M Center Office of Intellectual Property Counsel Post Office Box 33427, Saint Paul, Minnesota 55133-3427 (US).

(81) Designated States *(unless otherwise indicated, for every kind of national protection available)*: AE, AG, AL, AM, AO, AT, AU, AZ, BA, BB, BG, BH, BN, BR, BW, BY, BZ, CA, CH, CL, CN, CO, CR, CU, CZ, DE, DK, DM, DO, DZ, EC, EE, EG, ES, FI, GB, GD, GE, GH, GM, GT, HN, HR, HU, ID, IL, IN, IR, IS, JP, KE, KG, KN, KP, KR, KZ, LA, LC, LK, LR, LS, LU, LY, MA, MD, ME, MG, MK, MN, MW, MX, MY, MZ, NA, NG, NI, NO, NZ, OM, PA, PE, PG, PH, PL, PT, QA, RO, RS, RU, RW, SA, SC, SD, SE, SG, SK, SL, SM, ST, SV, SY, TH, TJ, TM, TN, TR, TT, TZ, UA, UG, US, UZ, VC, VN, ZA, ZM, ZW.

(84) Designated States *(unless otherwise indicated, for every kind of regional protection available)*: ARIPO (BW, GH, GM, KE, LR, LS, MW, MZ, NA, RW, SD, SL, ST, SZ, TZ, UG, ZM, ZW), Eurasian (AM, AZ, BY, KG, KZ, RU, TJ, TM), European (AL, AT, BE, BG, CH, CY, CZ, DE, DK, EE, ES, FI, FR, GB, GR, HR, HU, IE, IS, IT, LT, LU, LV, MC, MK, MT, NL, NO, PL, PT, RO, RS, SE, SI, SK, SM, TR), OAPI (BF, BJ, CF, CG, CI, CM, GA, GN, GQ, GW, KM, ML, MR, NE, SN, TD, TG).

Declarations under Rule 4.17:

— *as to applicant's entitlement to apply for and be granted a patent (Rule 4.17(ii))*

— *as to the applicant's entitlement to claim the priority of the earlier application (Rule 4.17(iii))*

[Continued on next page]

(54) Title: INTERRUPTED STRUCTURED ABRASIVE ARTICLE AND METHODS OF POLISHING A WORKPIECE

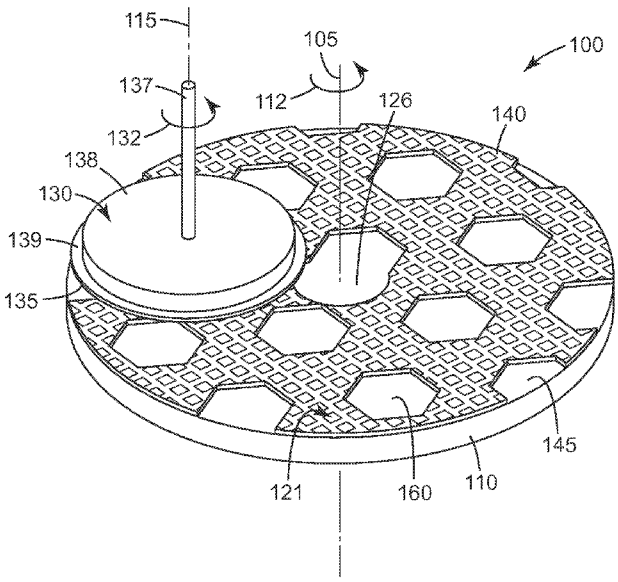

FIG. 1A

(57) Abstract: Interrupted structured abrasive articles comprise an abrasive layer comprising shaped abrasive composites that extend outwardly from a first major surface of a backing to which they are secured. The abrasive layer defines at least one open region that is free of the shaped abrasive composites and may extend partially or completely through the backing. In some embodiments, each of the open regions comprises a circular area of at least 1.5 square centimeters, and when combined the open regions have total area that is at least 10 percent of the area of the first major surface of the backing. Interrupted abrasive articles are useful in single-sided polishing processes.

WO 2015/167899 A1

Published:

— *with international search report (Art. 21(3))*