(12) INTERNATIONAL APPLICATION PUBLISHED UNDER THE PATENT COOPERATION TREATY (PCT)

(19) World Intellectual Property Organization
International Bureau

(43) International Publication Date
3 February 2005 (03.02.2005)

PCT

(10) International Publication Number
WO 2005/010377 A1

(51) International Patent Classification[7]: F15C 1/06

(21) International Application Number:
PCT/SG2004/000224

(22) International Filing Date: 29 July 2004 (29.07.2004)

(25) Filing Language: English

(26) Publication Language: English

(30) Priority Data:
10/631,488 31 July 2003 (31.07.2003) US

(71) Applicants *(for all designated States except US)*: **AGENCY FOR SCIENCE, TECHNOLOGY AND RESEARCH** [SG/SG]; 20 Biopolis Way, #07-01, Centros, Singapore 136668 (SG). **NATIONAL UNIVERSITY OF SINGAPORE** [SG/SG]; 10 Kent Ridge Crescent, Singapore, Singapore 119260 (SG).

(72) Inventors; and

(75) Inventors/Applicants *(for US only)*: **SAMPER, Victor** [GB/SG]; 45 Hindhede Walk #10-01, Springdale, Singapore 587978 (SG). **CONG, Lin** [CN/SG]; Blk 223C, Compassvale Walk, #13-667, Singapore 543223 (SG). **JI, Hongmiao** [CN/SG]; Blk 291B Bukit Batok St. 24, #10-39, Singapore 651291 (SG).

(74) Agent: **VIERING, JENTSCHURA & PARTNER**; P.O. Box 1088, Rochor Post Office, Rochor Road, Singapore 911833 (SG).

(81) Designated States *(unless otherwise indicated, for every kind of national protection available)*: AE, AG, AL, AM, AT, AU, AZ, BA, BB, BG, BR, BW, BY, BZ, CA, CH, CN, CO, CR, CU, CZ, DE, DK, DM, DZ, EC, EE, EG, ES, FI, GB, GD, GE, GH, GM, HR, HU, ID, IL, IN, IS, JP, KE, KG, KP, KR, KZ, LC, LK, LR, LS, LT, LU, LV, MA, MD, MG, MK, MN, MW, MX, MZ, NA, NI, NO, NZ, OM, PG, PH, PL, PT, RO, RU, SC, SD, SE, SG, SK, SL, SY, TJ, TM, TN, TR, TT, TZ, UA, UG, US, UZ, VC, VN, YU, ZA, ZM, ZW.

(84) Designated States *(unless otherwise indicated, for every kind of regional protection available)*: ARIPO (BW, GH, GM, KE, LS, MW, MZ, NA, SD, SL, SZ, TZ, UG, ZM, ZW), Eurasian (AM, AZ, BY, KG, KZ, MD, RU, TJ, TM), European (AT, BE, BG, CH, CY, CZ, DE, DK, EE, ES, FI, FR, GB, GR, HU, IE, IT, LU, MC, NL, PL, PT, RO, SE, SI,

*[Continued on next page]*

(54) Title: MICROFLUIDICS CHIPS AND METHODS OF USING SAME

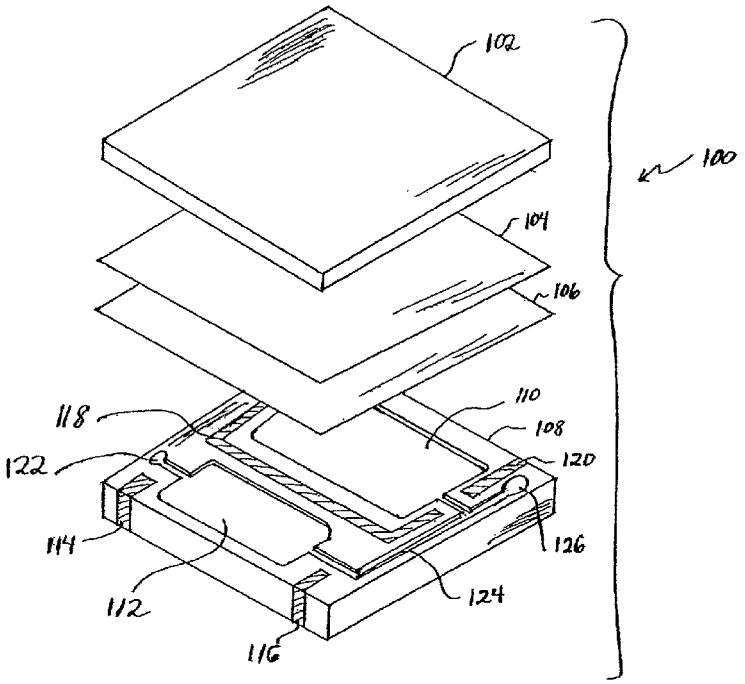


(57) Abstract: Microfluidics chips and methods of use are described, comprising a pair of wafers (102, 108), at least one having a patterned surface (108), and two polymeric barrier films (104, 106) between the wafers conforming to the patterned surface. The polymeric barrier films allow the wafers of the inventive microfluidics chips to be reused without cleaning.

WO 2005/010377 A1

SK, TR), OAPI (BF, BJ, CF, CG, CI, CM, GA, GN, GQ, GW, ML, MR, NE, SN, TD, TG).

**Published:**

— *with international search report*

*For two-letter codes and other abbreviations, refer to the "Guidance Notes on Codes and Abbreviations" appearing at the beginning of each regular issue of the PCT Gazette.*