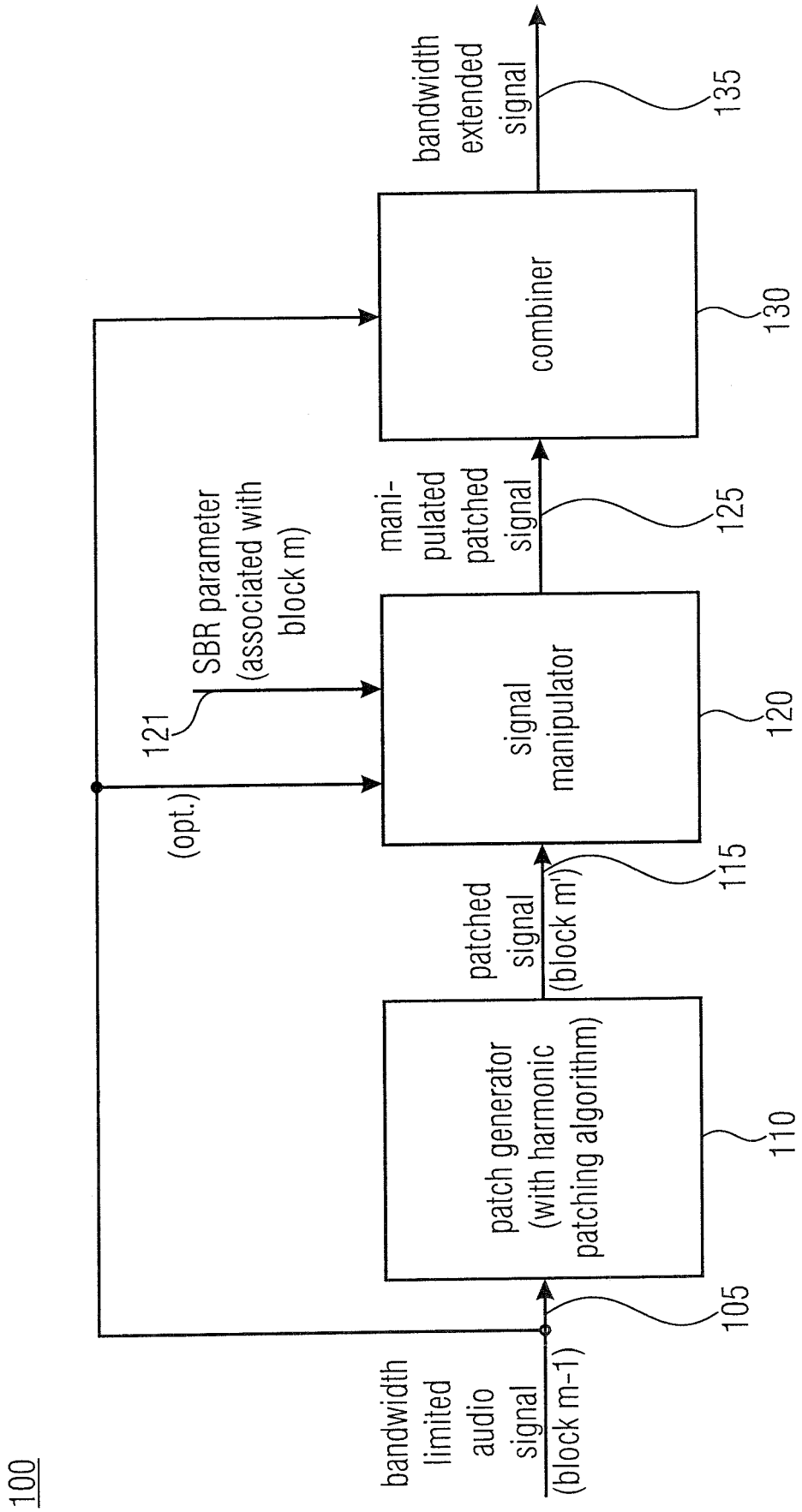
100
bandwidth limited audio signal (block m-1)
105
patch generator (with harmonic patching algorithm)
110
patched signal (block m')
115
(opt.)
121
SBR parameter (associated with block m)
signal manipulator
120
mani-pulated patched signal
125
combiner
130
bandwidth extended signal
135

FIGURE 1

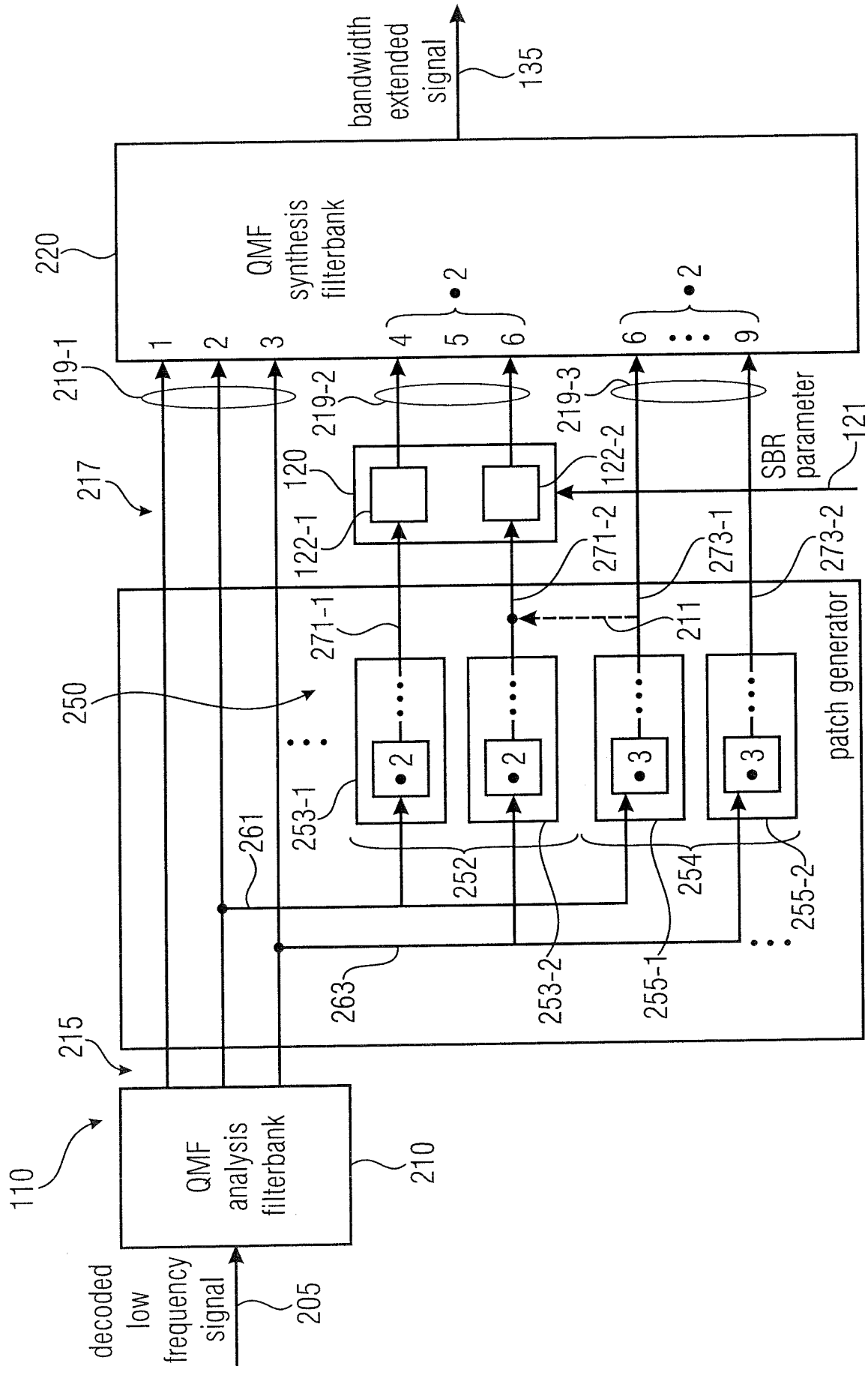
decoded low frequency signal
205
110
QMF analysis filterbank
210
215
250
261
263
253-1
253-2
255-1
255-2
252
254
271-1
271-2
211
273-1
273-2
patch generator
217
120
122-1
122-2
SBR parameter
121
219-1
219-2
219-3
220
QMF synthesis filterbank
1
2
3
4
5
6
6
9
2
2
bandwidth extended signal
135

FIGURE 2

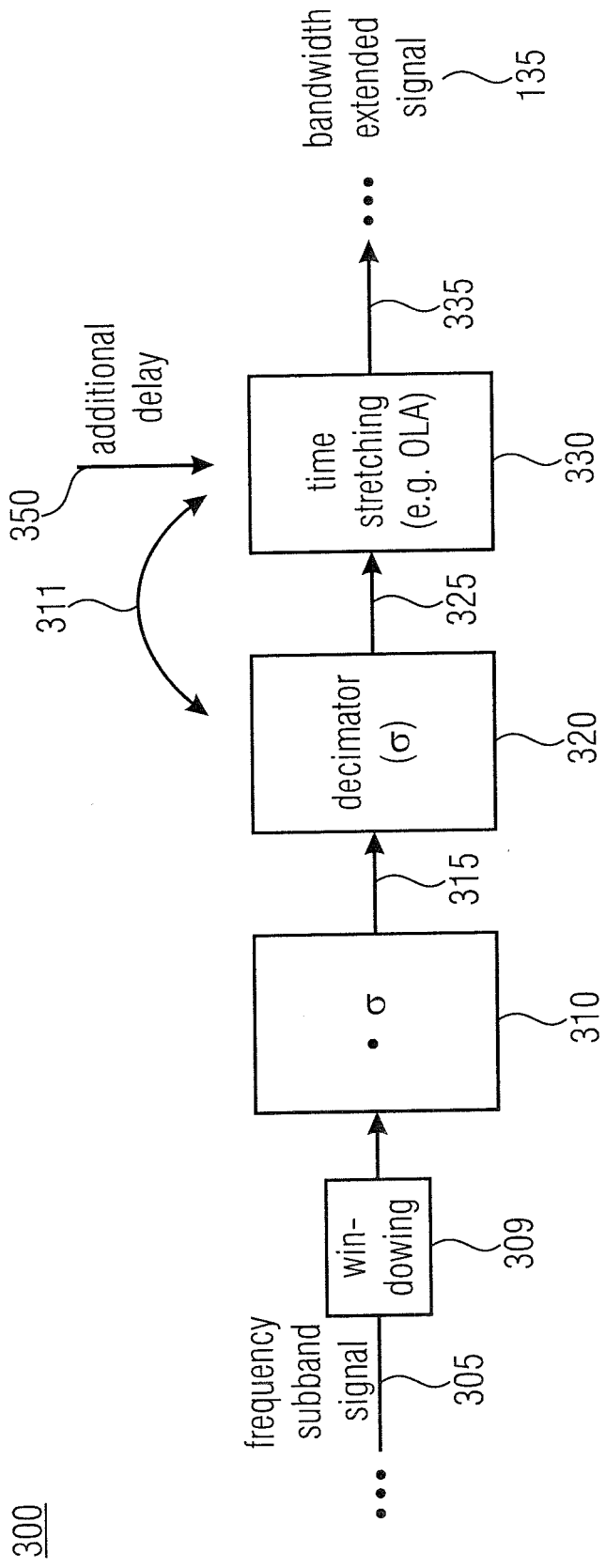
300
frequency subband signal
305
win-dowing
309
• σ
310
315
decimator (σ)
320
325
time stretching (e.g. OLA)
330
335
bandwidth extended signal
135
additional delay
350
311

FIGURE 3

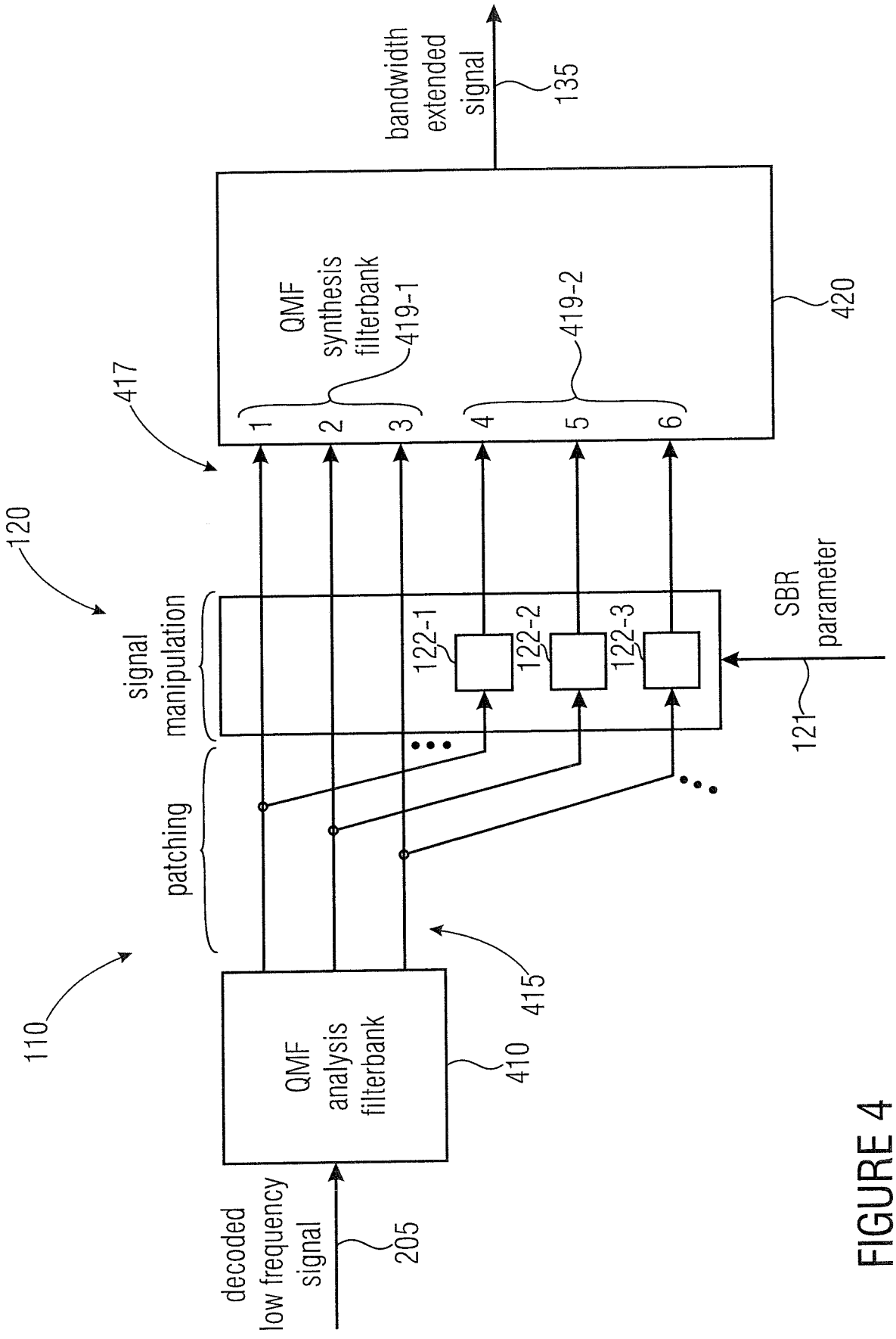
bandwidth extended signal
135
QMF synthesis filterbank
419-1
419-2
420
417
1
2
3
4
5
6
120
signal manipulation
patching
122-1
122-2
122-3
SBR parameter
121
110
QMF analysis filterbank
410
415
decoded low frequency signal
205

FIGURE 4

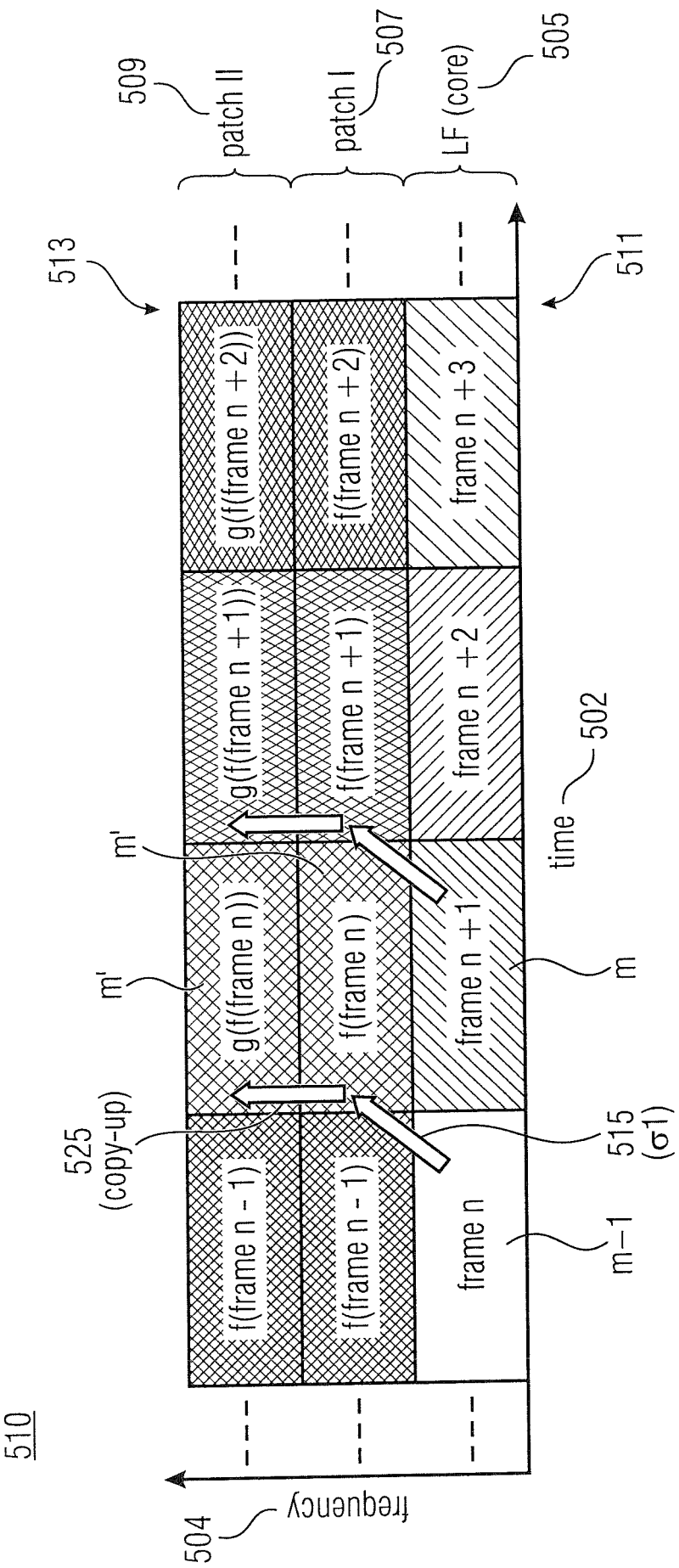
509
patch II
507
patch I
505
LF (core)
513
511
g(f(frame n + 2))
f(frame n + 2)
frame n + 3
g(f(frame n + 1))
f(frame n + 1)
frame n + 2
m'
time
502
g(f(frame n))
f(frame n)
frame n + 1
m'
m
525
(copy-up)
515
(σ1)
f(frame n - 1)
f(frame n - 1)
frame n
m−1
510
frequency
504

FIGURE 5A

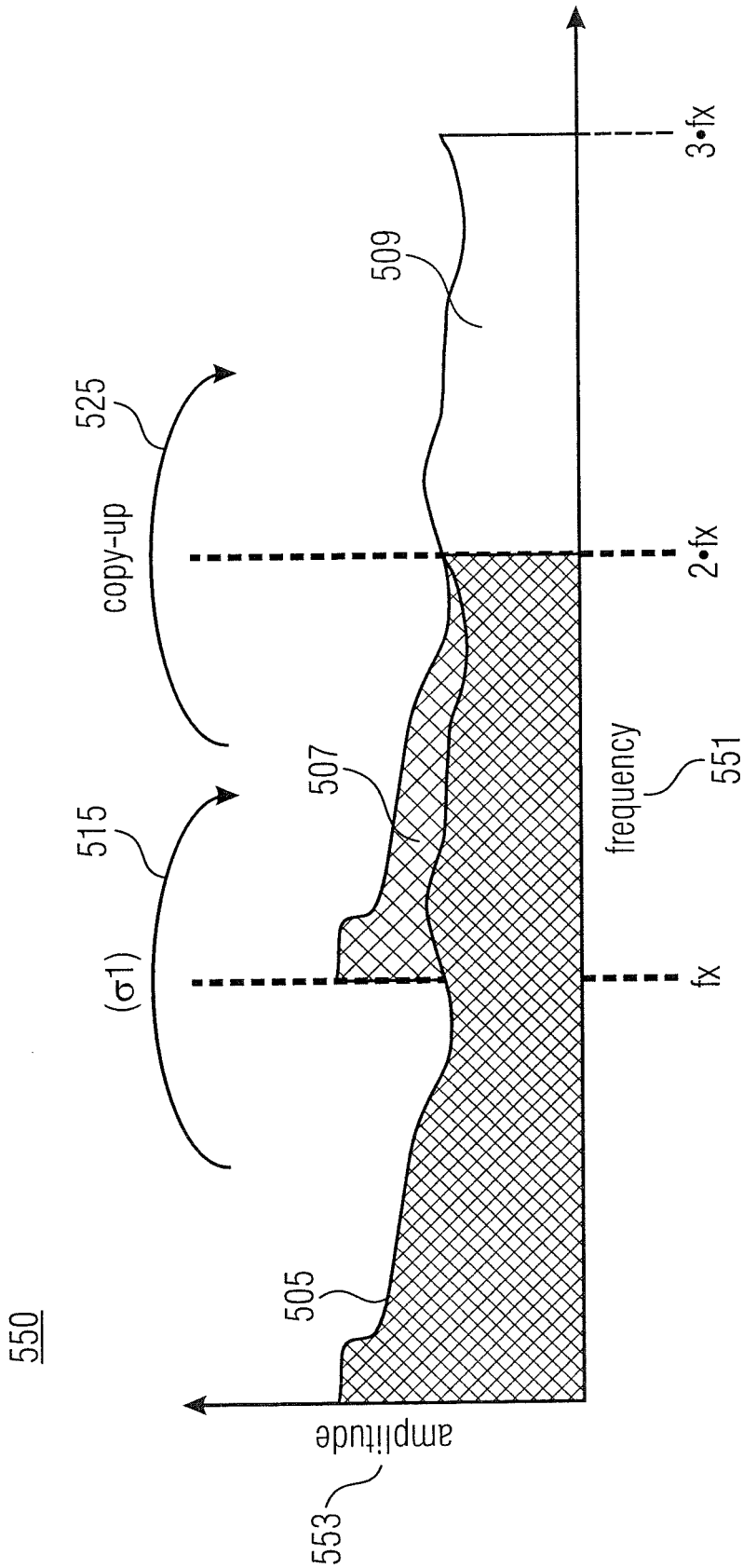
550
505
amplitude
553
(σ1)
515
507
fx
frequency
551
copy-up
525
509
2•fx
3•fx

FIGURE 5B

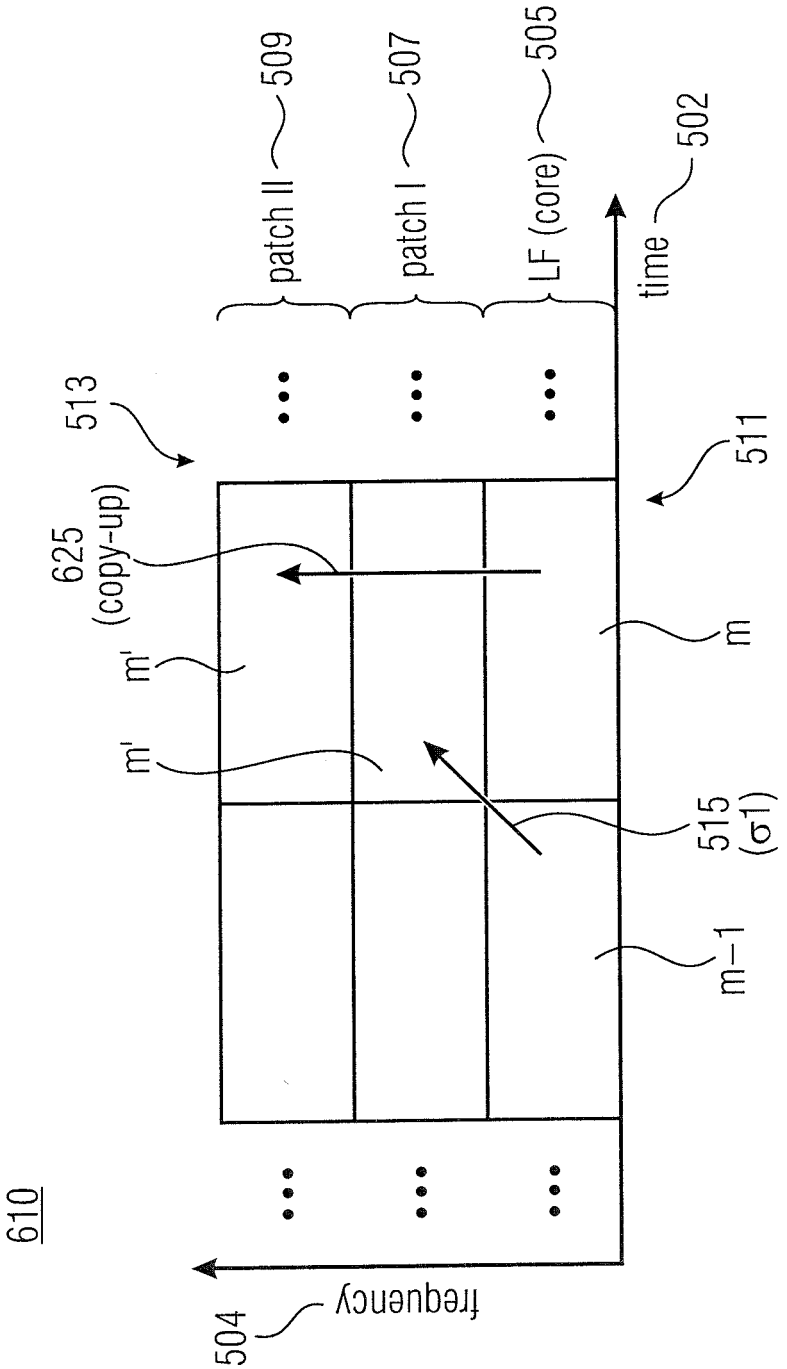
610
504
frequency
time
502
patch II
509
patch I
507
LF (core)
505
513
511
625
(copy-up)
m'
m'
m
m−1
515
(σ1)

FIGURE 6A

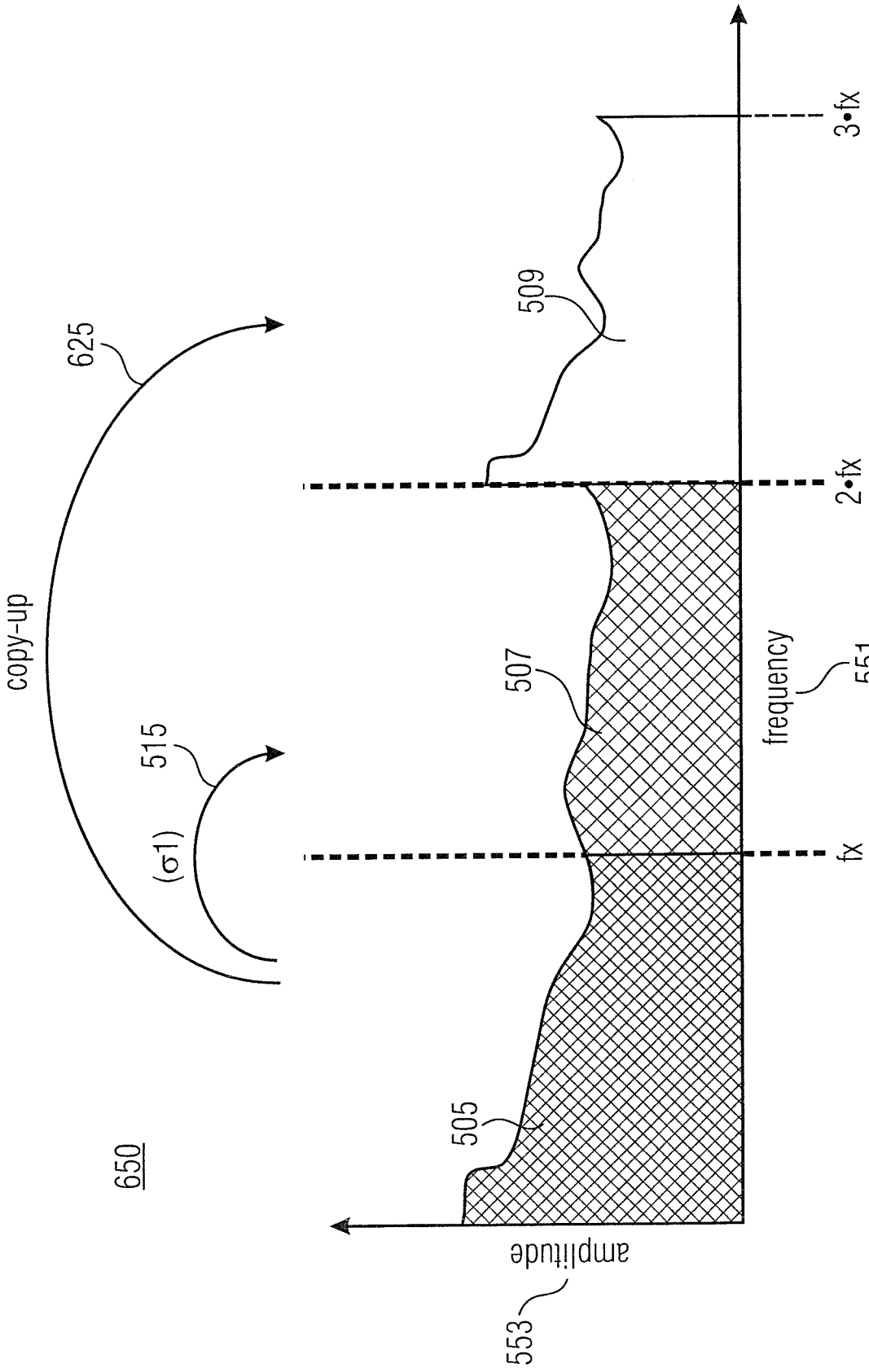
650
copy-up
625
515
(σ1)
505
507
509
fx
2•fx
3•fx
frequency
551
amplitude
553

FIGURE 6B

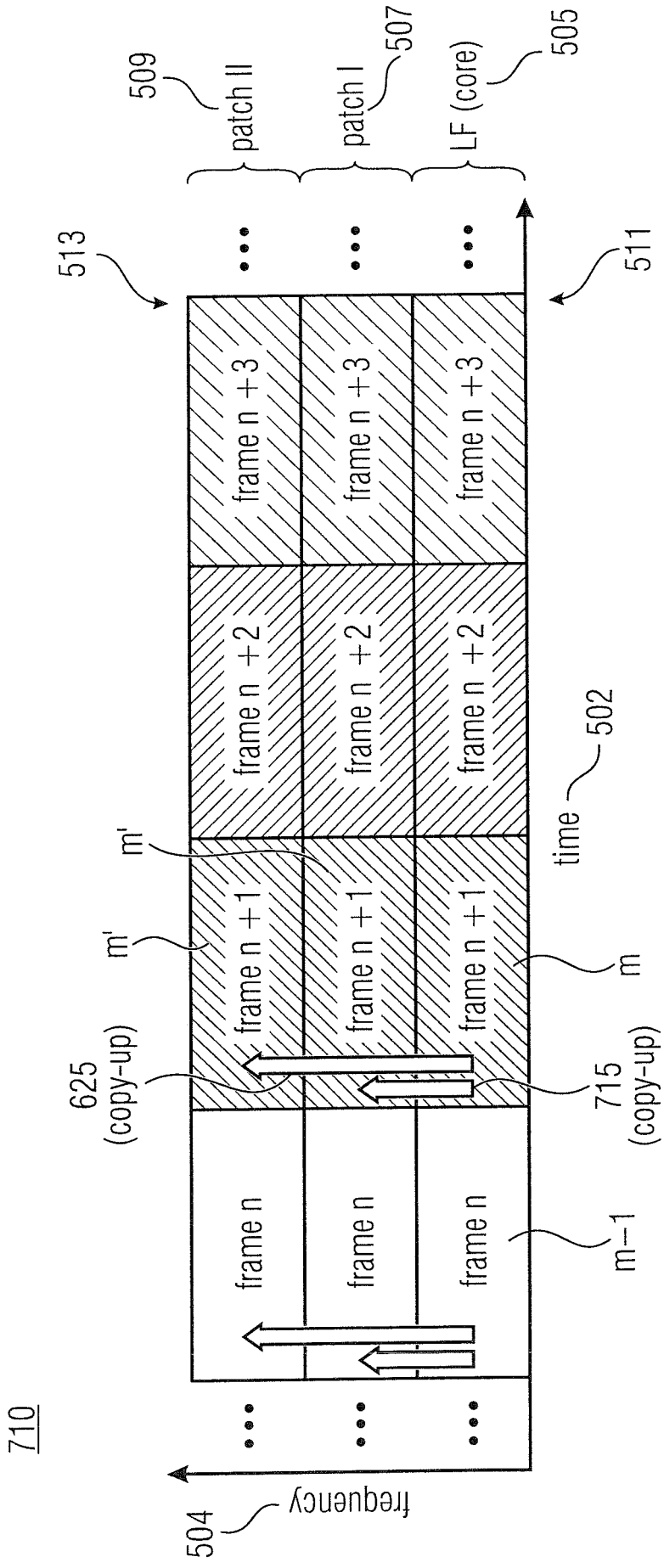
509
patch II
507
patch I
505
LF (core)
513
511
frame n +3
frame n +2
frame n +1
frame n
time
502
m'
m'
m
m−1
625
(copy-up)
715
(copy-up)
710
frequency
504

FIGURE 7A

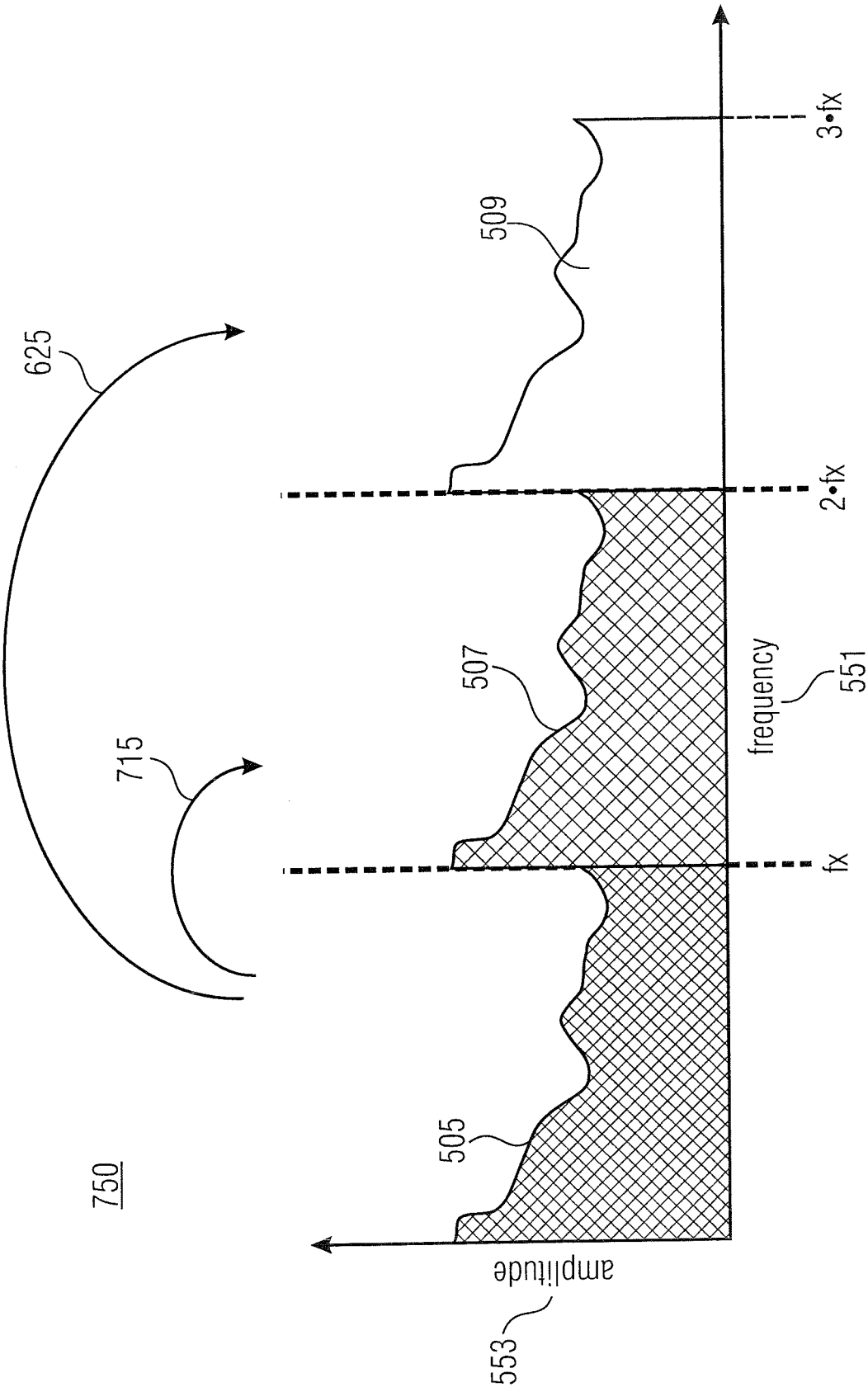
625
715
509
507
505
750
3•fx
2•fx
fx
frequency
551
amplitude
553

FIGURE 7B

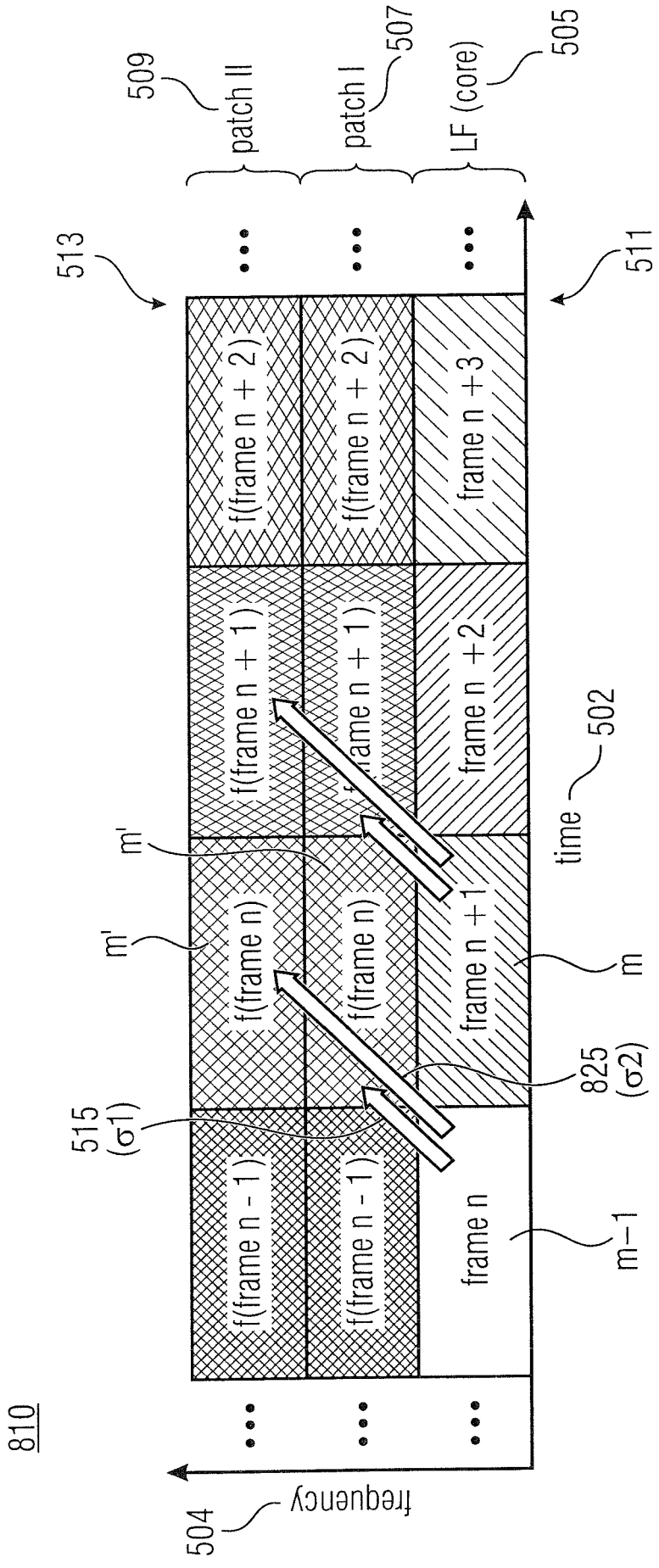
509
patch II
patch I
507
LF (core)
505
513
511
f(frame n + 2)
f(frame n + 2)
frame n +3
f(frame n + 1)
f(frame n + 1)
frame n +2
m'
m'
f(frame n)
f(frame n)
frame n +1
time
502
m
825
(σ2)
515
(σ1)
f(frame n - 1)
f(frame n - 1)
frame n
m−1
810
frequency
504

FIGURE 8A

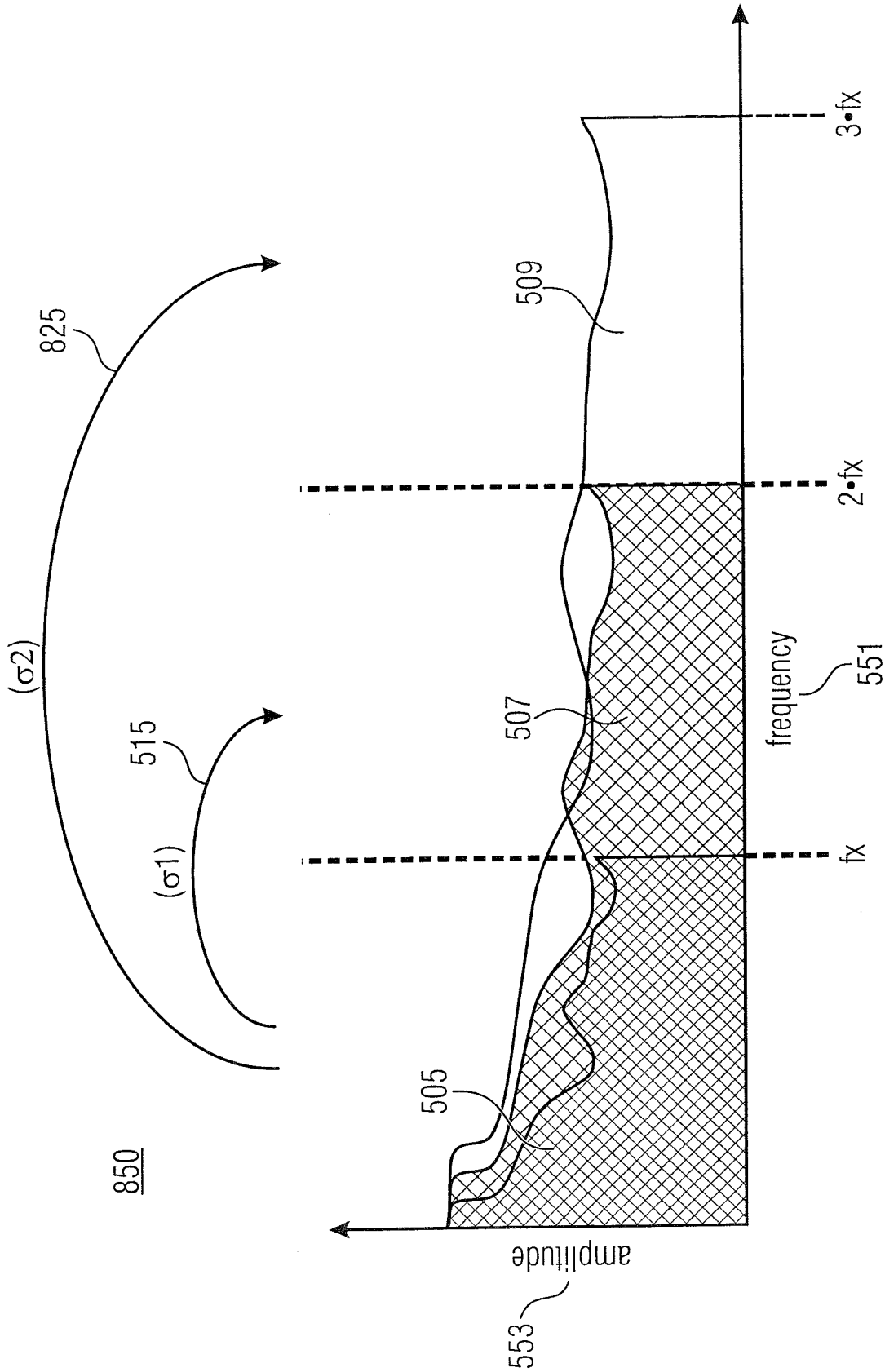
850
825
(σ2)
515
(σ1)
505
507
509
amplitude
553
frequency
551
fx
2•fx
3•fx

FIGURE 8B

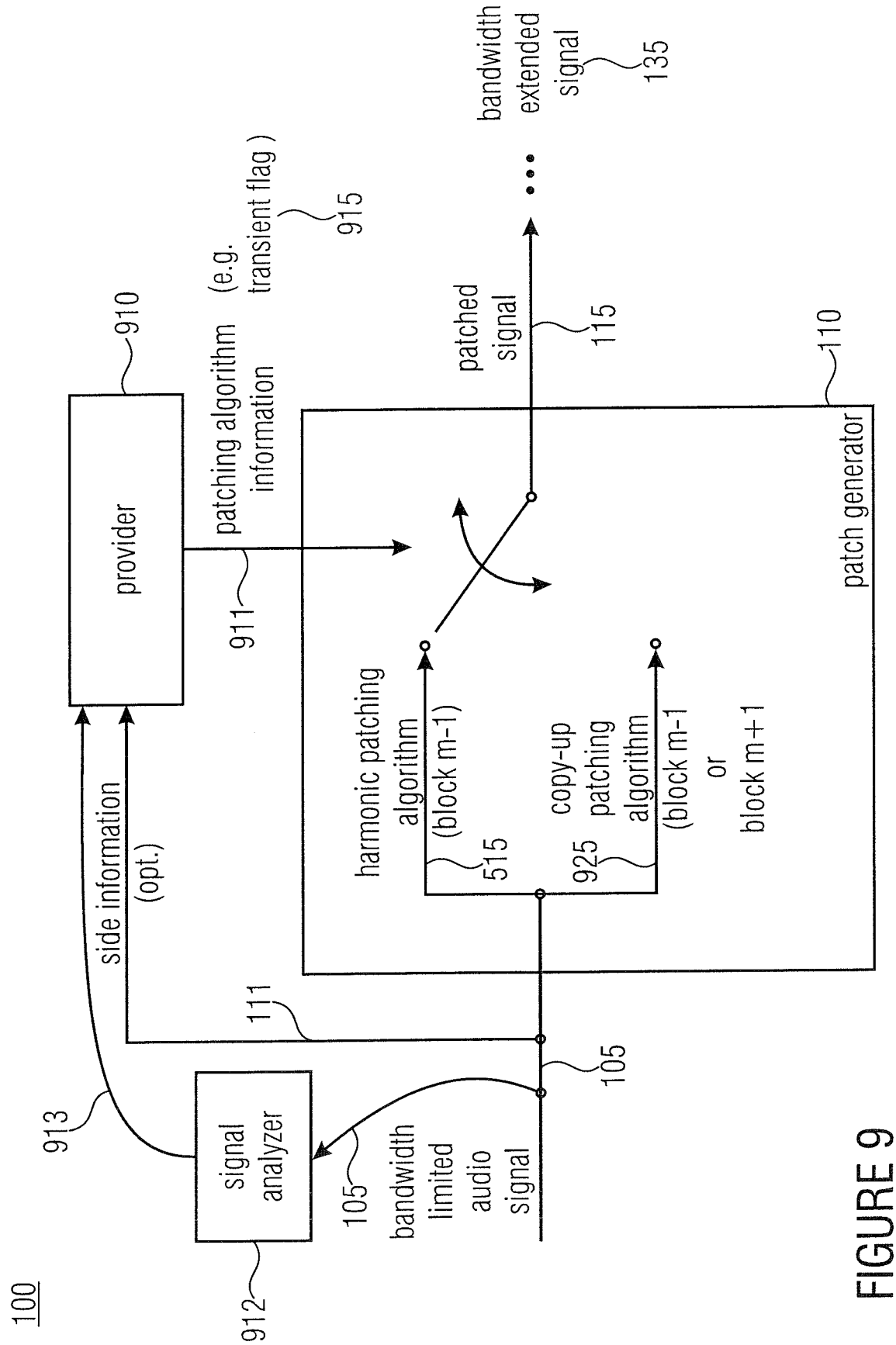
100
912
signal analyzer
913
105
bandwidth limited audio signal
105
111
side information (opt.)
910
provider
911
patching algorithm information (e.g. transient flag )
915
harmonic patching algorithm (block m-1)
515
copy-up patching algorithm (block m-1 or block m+1)
925
patched signal
115
bandwidth extended signal
135
110
patch generator

FIGURE 9

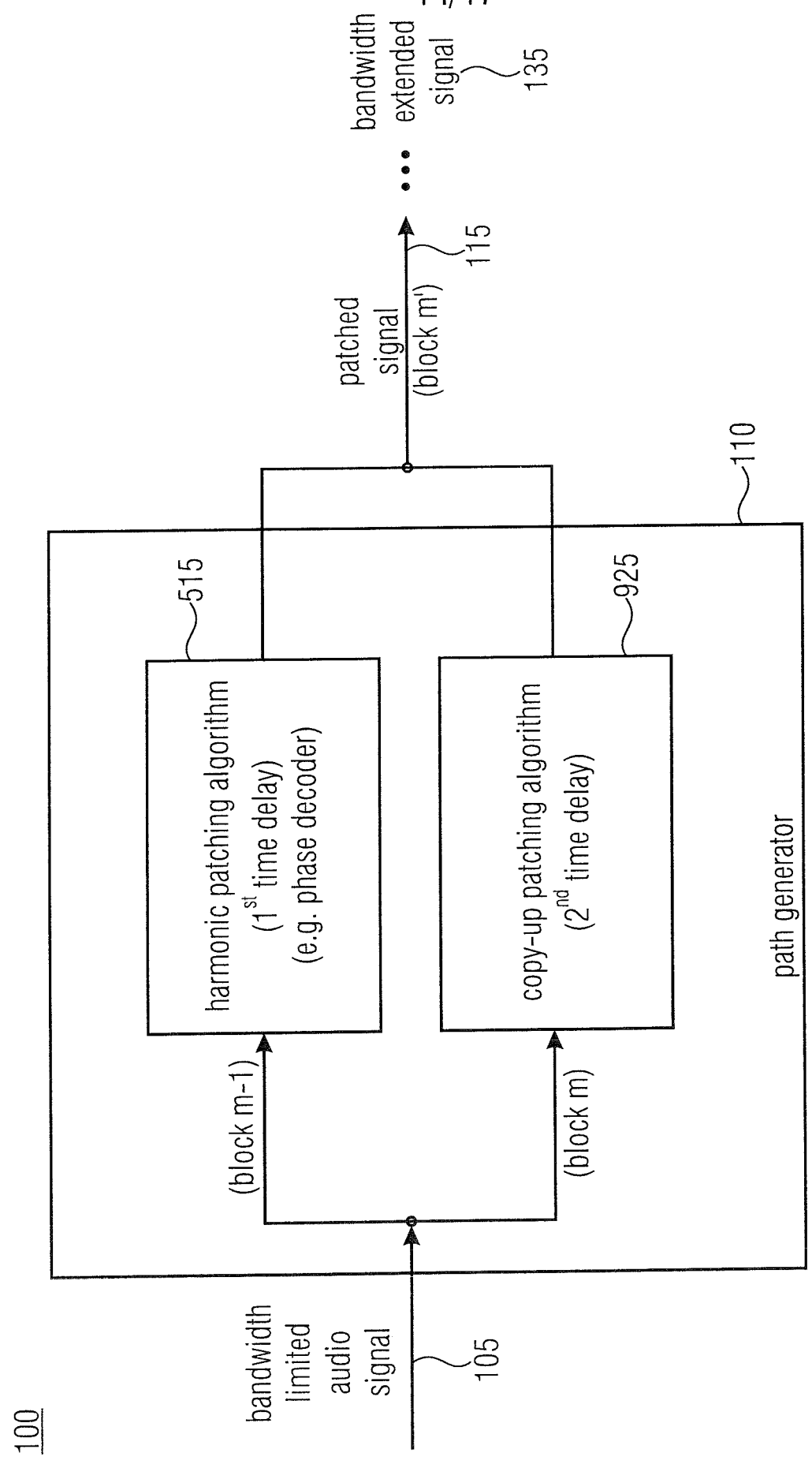
100
bandwidth limited audio signal
105
(block m-1)
(block m)
harmonic patching algorithm (1st time delay) (e.g. phase decoder)
515
copy-up patching algorithm (2nd time delay)
925
path generator
110
patched signal (block m')
115
bandwidth extended signal
135
(1st time delay > 2nd time delay)
1010
1020

FIGURE 10

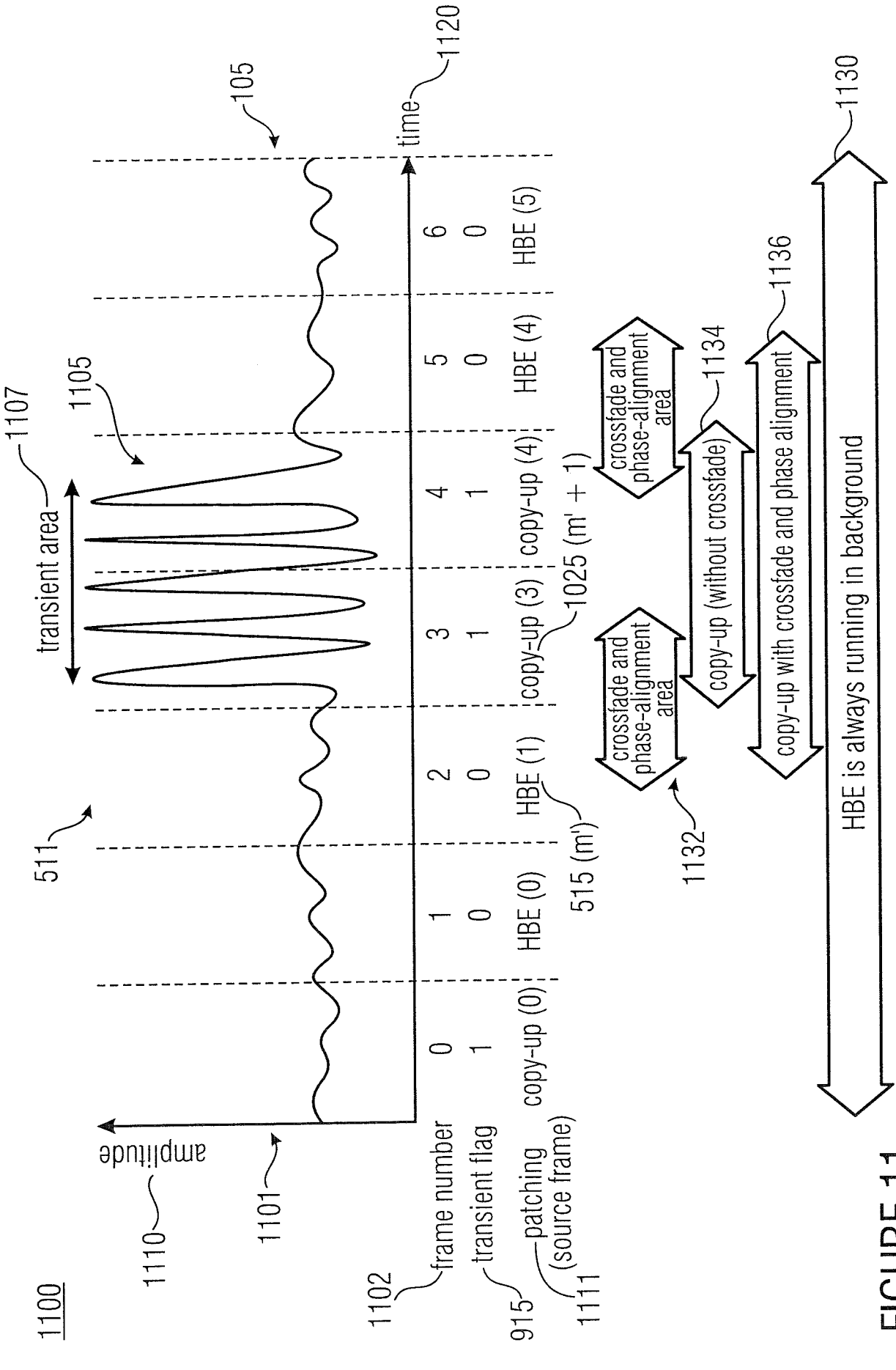
1100
1110
amplitude
1101
511
transient area
1107
1105
105
time
1120
1102
frame number
0
1
2
3
4
5
6
915
transient flag
1
0
0
1
1
0
0
1111
patching (source frame)
copy-up (0)
HBE (0)
HBE (1)
copy-up (3)
copy-up (4)
HBE (4)
HBE (5)
515 (m')
1025 (m' + 1)
1132
crossfade and phase-alignment area
1134
copy-up (without crossfade)
crossfade and phase-alignment area
1136
copy-up with crossfade and phase alignment
1130
HBE is always running in background

FIGURE 11

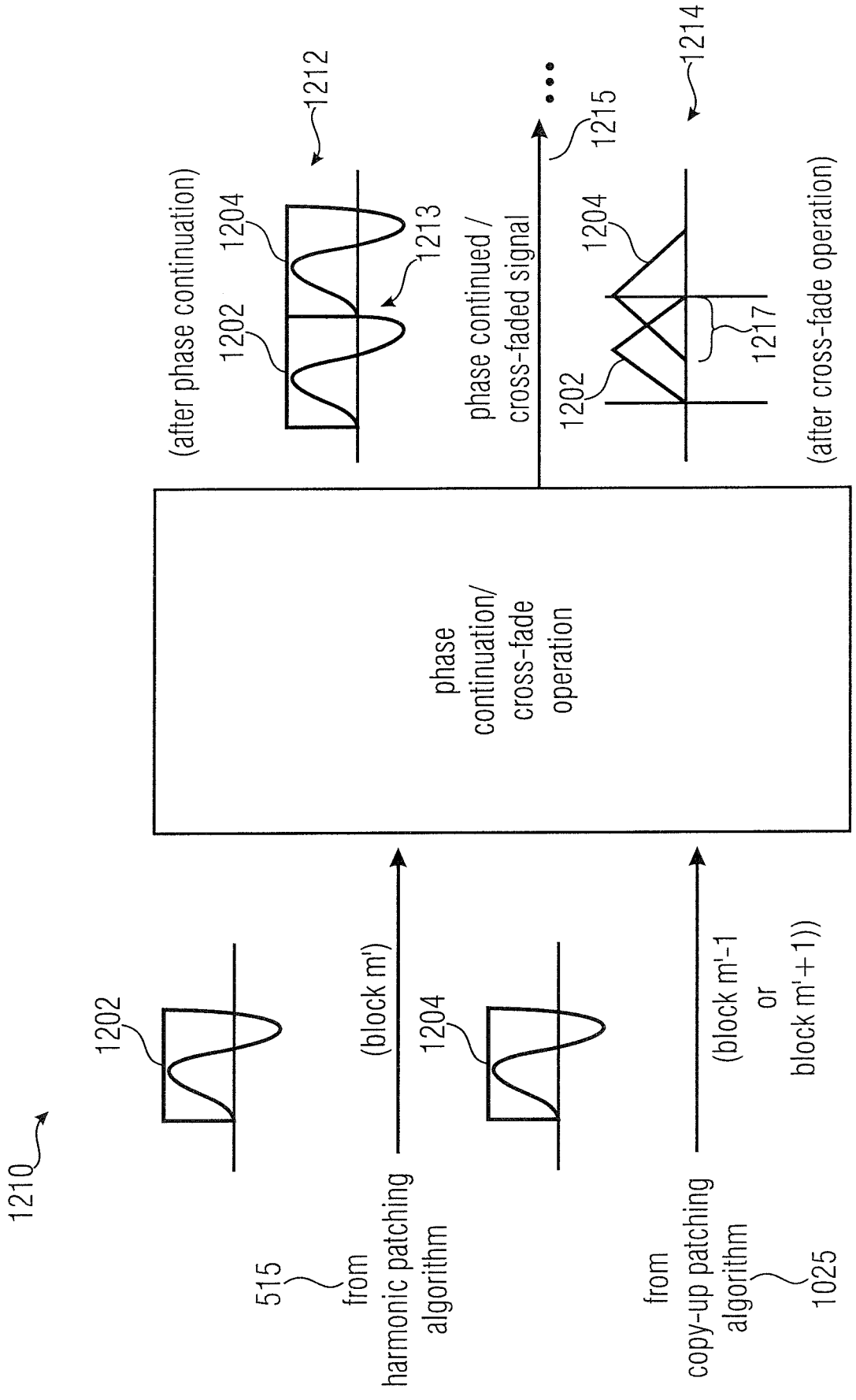
1210
1202
515
from
harmonic patching
algorithm
(block m')
1204
from
copy-up patching
algorithm
1025
(block m'-1
or
block m'+1))
phase
continuation/
cross-fade
operation
(after phase continuation)
1202
1204
1213
1212
phase continued /
cross-faded signal
1215
1214
1202
1204
1217
(after cross-fade operation)

FIGURE 12

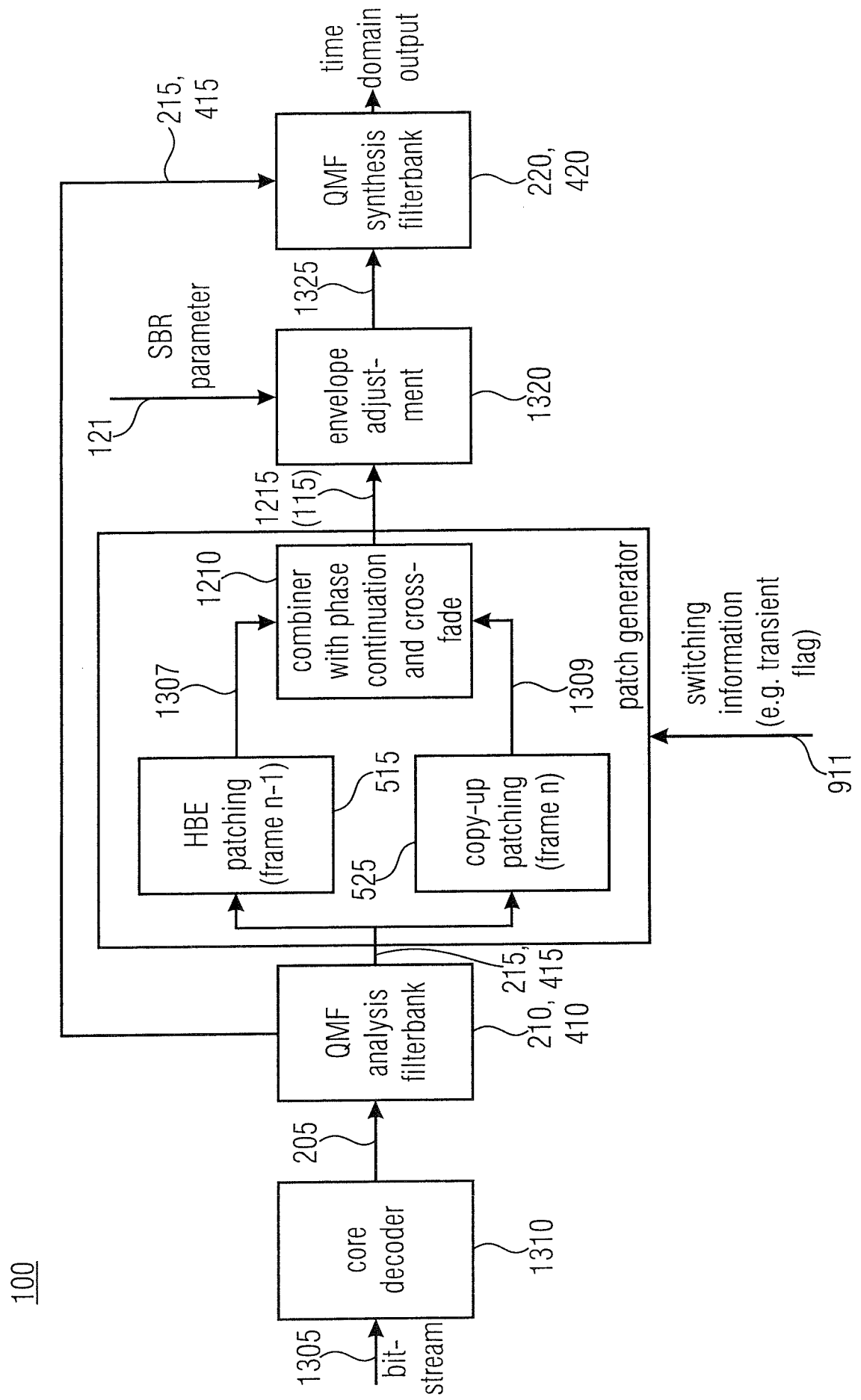
100
1305
bit-stream
core decoder
1310
205
QMF analysis filterbank
210, 415
410
215, 415
HBE patching (frame n-1)
515
525
copy-up patching (frame n)
1307
1309
combiner with phase continuation and cross-fade
1210
patch generator
switching information (e.g. transient flag)
911
1215 (115)
envelope adjust-ment
1320
121
SBR parameter
1325
QMF synthesis filterbank
220, 420
215, 415
time domain output

FIGURE 13