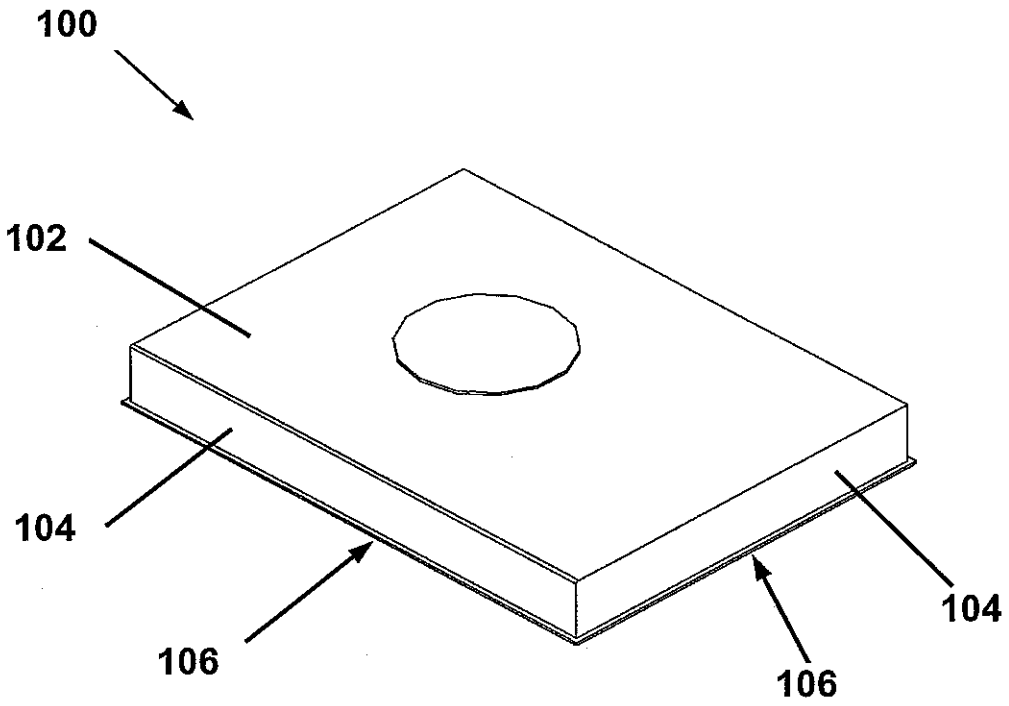

FIG. 1

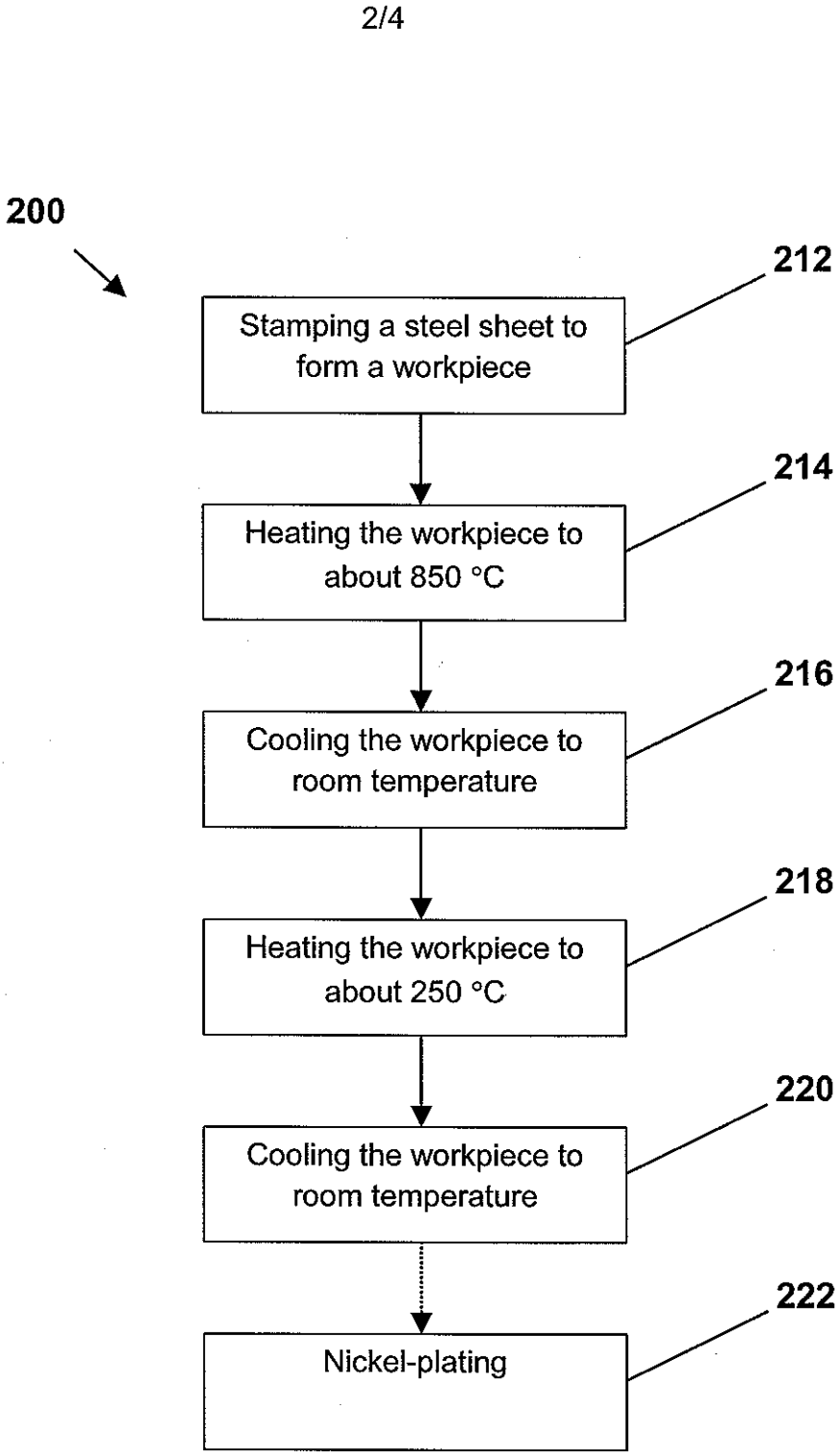
200
212
Stamping a steel sheet to form a workpiece
214
Heating the workpiece to about 850 °C
216
Cooling the workpiece to room temperature
218
Heating the workpiece to about 250 °C
220
Cooling the workpiece to room temperature
222
Nickel-plating

FIG. 2

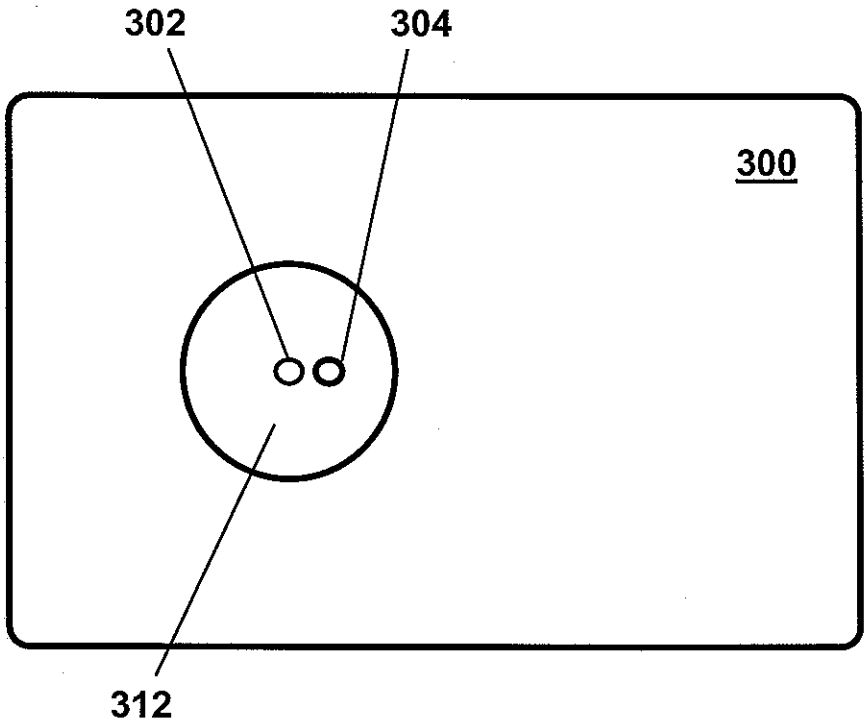
302
304
300
312

FIG. 3

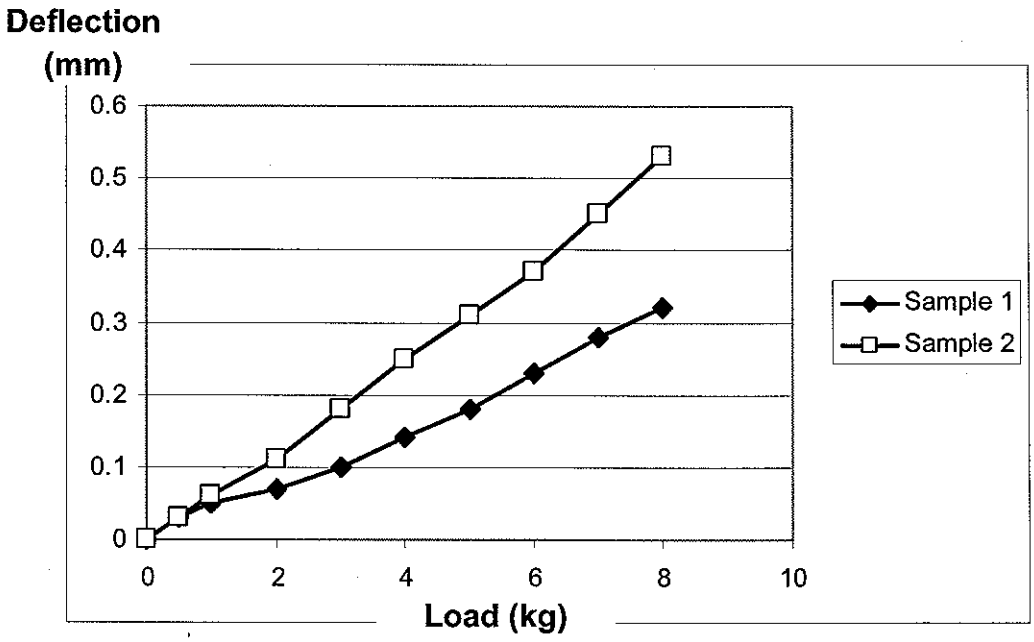
Deflection (mm)
0.6
0.5
0.4
0.3
0.2
0.1
0
0
2
4
6
8
10
Load (kg)
Sample 1
Sample 2

FIG. 4

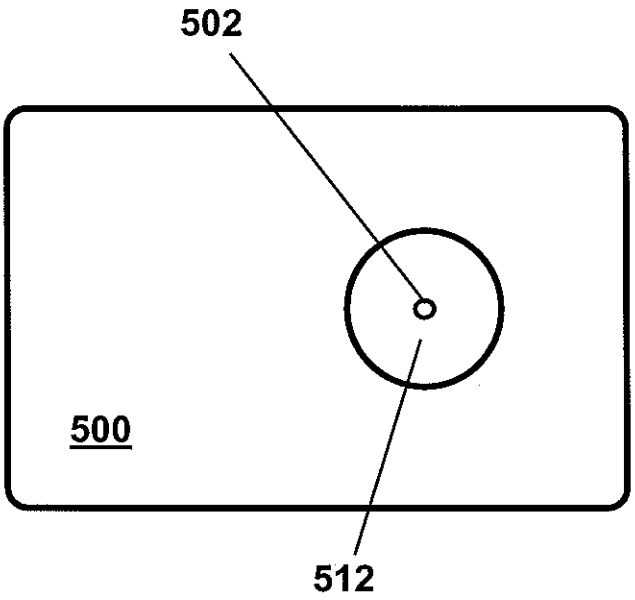
502
500
512

FIG. 5

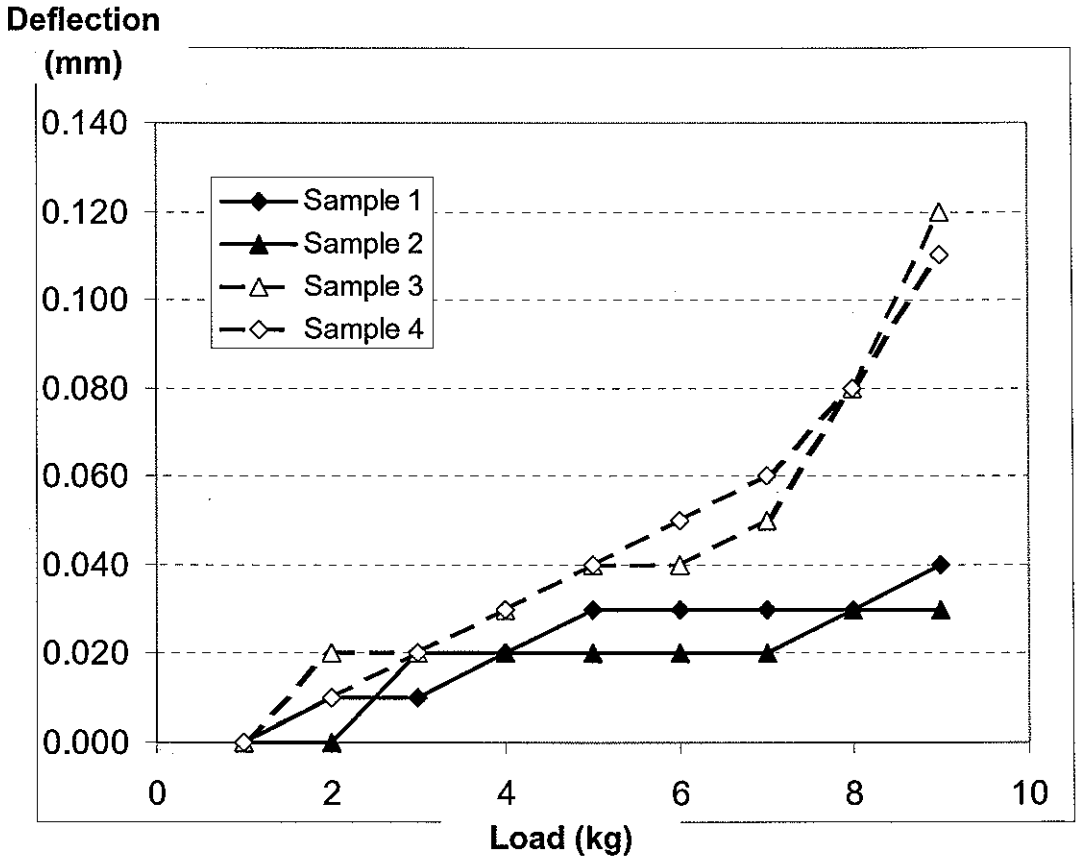
Deflection
(mm)
0.140
0.120
0.100
0.080
0.060
0.040
0.020
0.000
Sample 1
Sample 2
Sample 3
Sample 4
0
2
4
6
8
10
Load (kg)

FIG. 6