(12) INTERNATIONAL APPLICATION PUBLISHED UNDER THE PATENT COOPERATION TREATY (PCT)

(19) World Intellectual Property Organization
International Bureau

(43) International Publication Date
12 September 2013 (12.09.2013)

WIPO | PCT

(10) International Publication Number
WO 2013/131616 A1

(51) International Patent Classification:
B65D 85/10 (2006.01)

(21) International Application Number:
PCT/EP2013/000511

(22) International Filing Date:
21 February 2013 (21.02.2013)

(25) Filing Language: English

(26) Publication Language: English

(30) Priority Data:
12001648.0 9 March 2012 (09.03.2012) EP

(71) Applicant: **PHILIP MORRIS PRODUCTS S.A.** [CH/CH]; Quai Jeanrenaud 3, CH-2000 Neuchâtel (CH).

(72) Inventors: **BRÜGGER, Kevin**; Kannenbaumstrasse 29, CH-4616 Kappel (CH). **KRASIEV, Sergey**; Route Cantonale 21, CH-1025 Saint Sulpice (CH).

(74) Agent: **HILGERS, Hans**; Grünecker, Kinkeldey, Stockmair & Schwanhäusser, Leopoldstrasse 4, 80802 München (DE).

(81) Designated States *(unless otherwise indicated, for every kind of national protection available)*: AE, AG, AL, AM, AO, AT, AU, AZ, BA, BB, BG, BH, BN, BR, BW, BY, BZ, CA, CH, CL, CN, CO, CR, CU, CZ, DE, DK, DM, DO, DZ, EC, EE, EG, ES, FI, GB, GD, GE, GH, GM, GT, HN, HR, HU, ID, IL, IN, IS, JP, KE, KG, KM, KN, KP, KR, KZ, LA, LC, LK, LR, LS, LT, LU, LY, MA, MD, ME, MG, MK, MN, MW, MX, MY, MZ, NA, NG, NI, NO, NZ, OM, PA, PE, PG, PH, PL, PT, QA, RO, RS, RU, RW, SC, SD, SE, SG, SK, SL, SM, ST, SV, SY, TH, TJ, TM, TN, TR, TT, TZ, UA, UG, US, UZ, VC, VN, ZA, ZM, ZW.

(84) Designated States *(unless otherwise indicated, for every kind of regional protection available)*: ARIPO (BW, GH, GM, KE, LR, LS, MW, MZ, NA, RW, SD, SL, SZ, TZ, UG, ZM, ZW), Eurasian (AM, AZ, BY, KG, KZ, RU, TJ, TM), European (AL, AT, BE, BG, CH, CY, CZ, DE, DK,

[Continued on next page]

(54) Title: CONTAINER WITH SLIDABLE LID AND LIFTING FEATURE

(57) Abstract: The present invention relates to a container (1) for rod-shaped items, with a box (3) and a lid (2), wherein the box (3) comprises an opening at the top. The container further comprises a sheet-like connecting means (21, 22, 23) connected to the lid, wherein the sheet-like connecting means (21, 22, 23) is arranged vertically slidable relative to the box, such that the lid (2) and the connecting means (21, 22, 23) are movable from a lower position to an upper position. The connecting means (21, 22, 23) is adapted to vertically lift at least one rod-shaped item by a predetermined distance when the lid is moved from the lower position to the upper position.

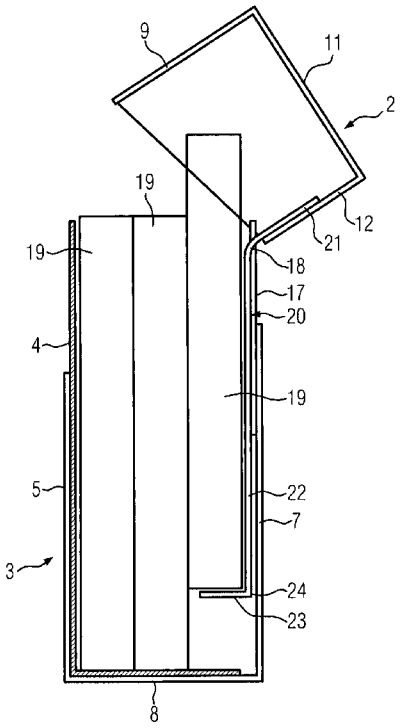

FIG. 4

WO 2013/131616 A1

EE, ES, FI, FR, GB, GR, HR, HU, IE, IS, IT, LT, LU, LV, MC, MK, MT, NL, NO, PL, PT, RO, RS, SE, SI, SK, SM, TR), OAPI (BF, BJ, CF, CG, CI, CM, GA, GN, GQ, GW, ML, MR, NE, SN, TD, TG).

Published:

— *with international search report (Art. 21(3))*