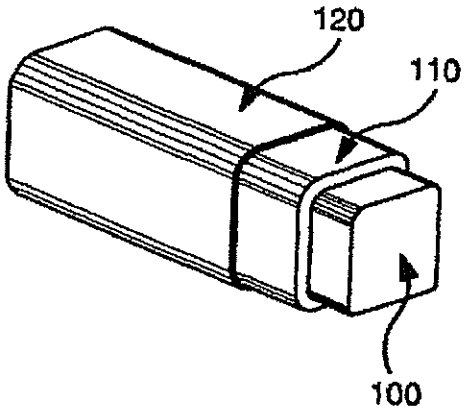

FIG. 1A

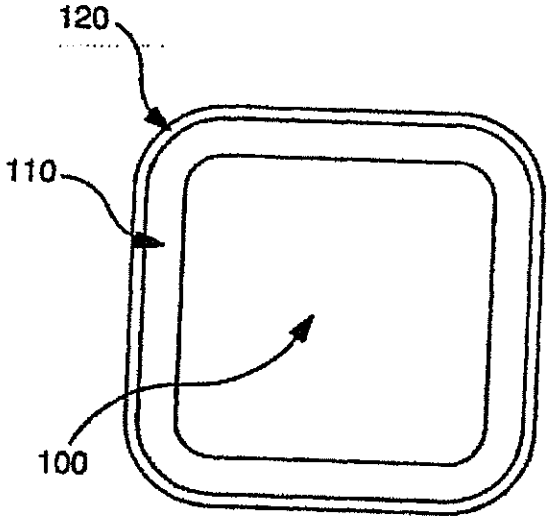

FIG. 1B

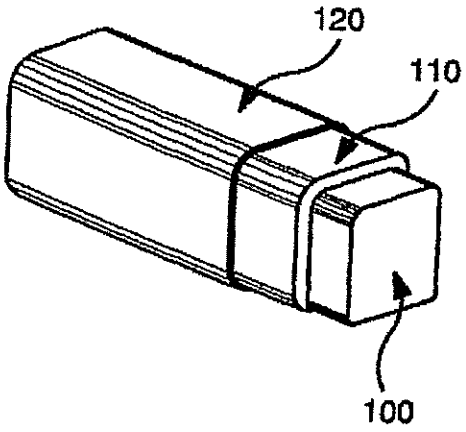

FIG. 2A

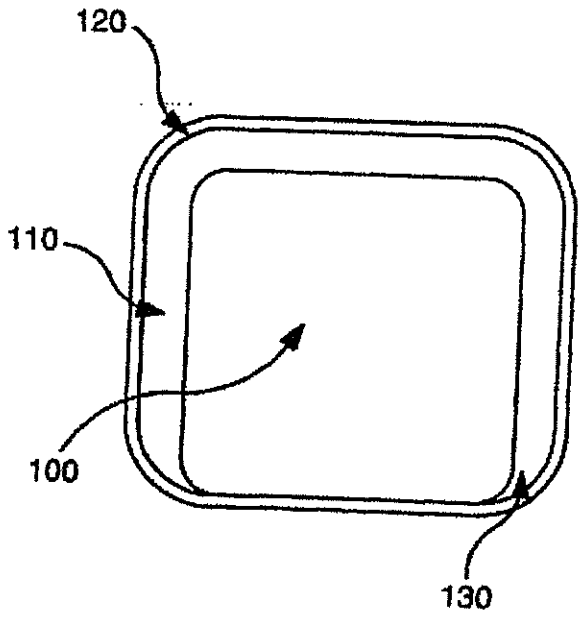

FIG. 2B

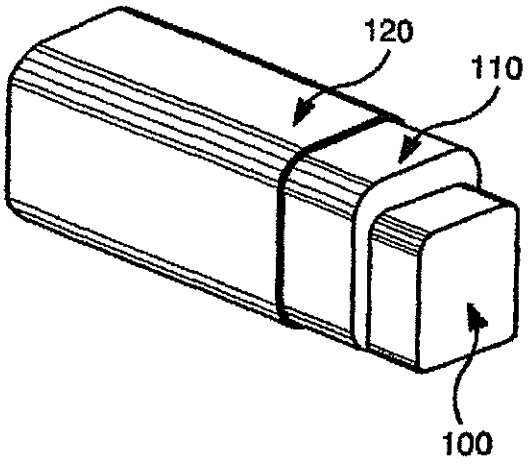

FIG. 3A

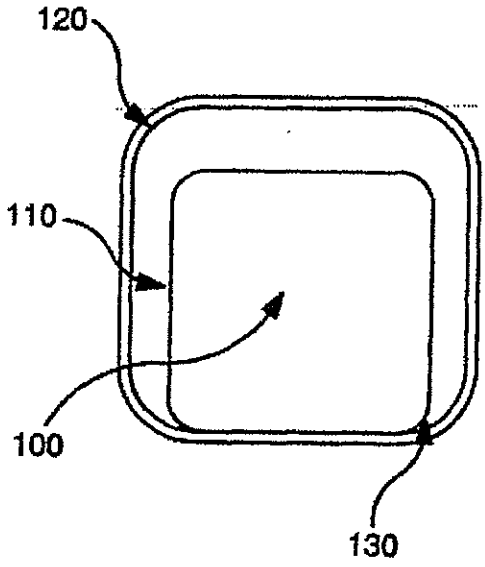

FIG. 3B

FIG. 4A

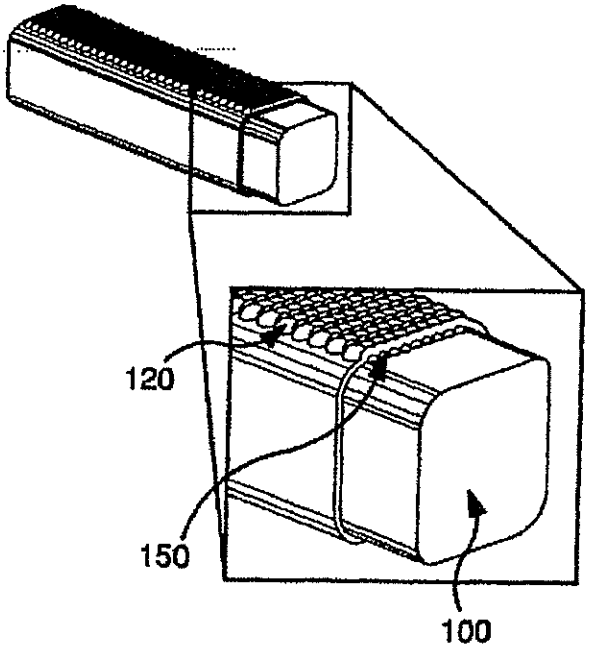

FIG. 4B

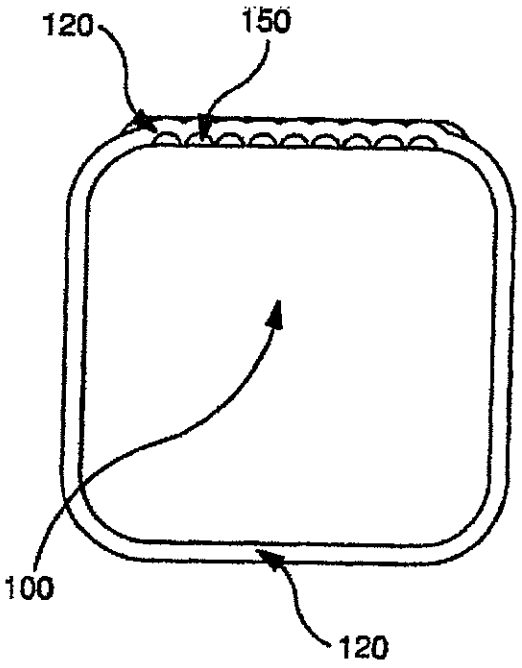

FIG. 4C

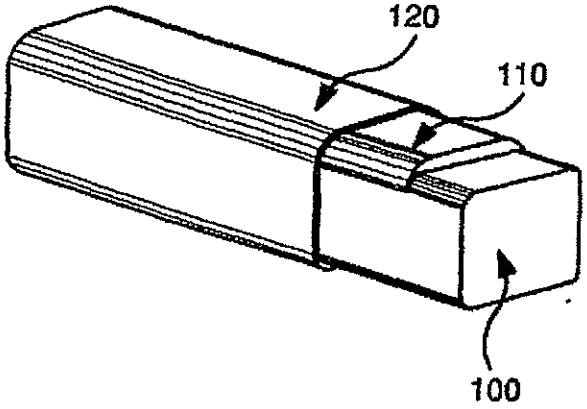

FIG. 5A

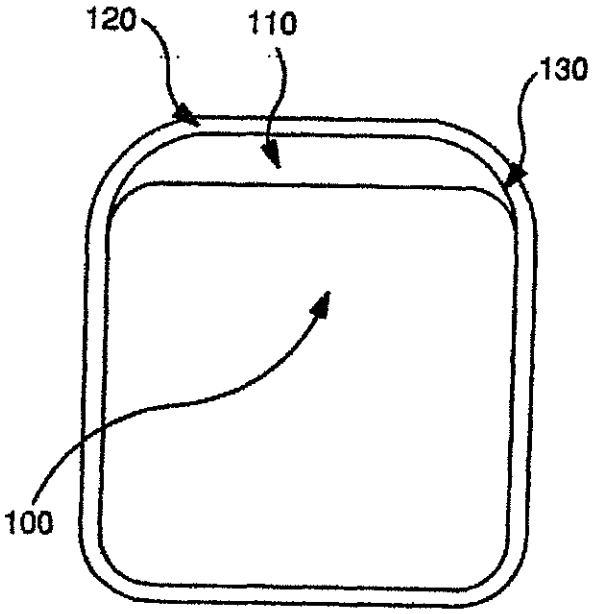

FIG. 5B

FIG. 6A

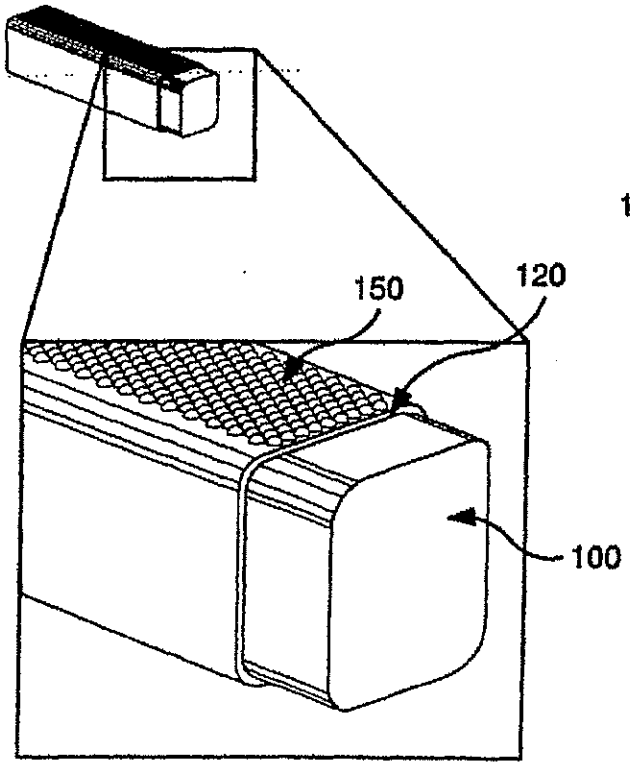

FIG. 6B

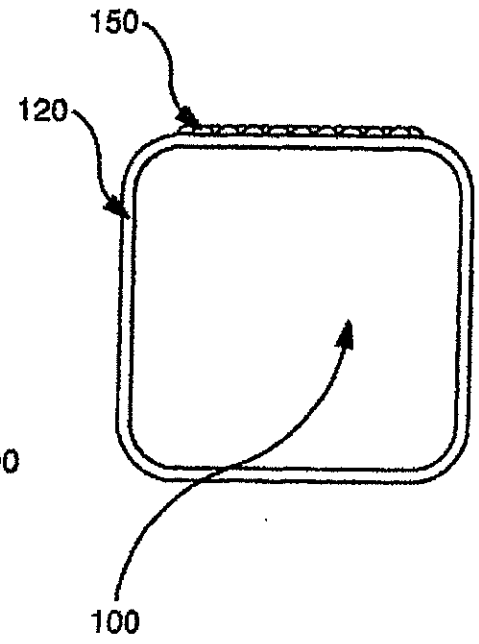

FIG. 6C

FIG. 7A

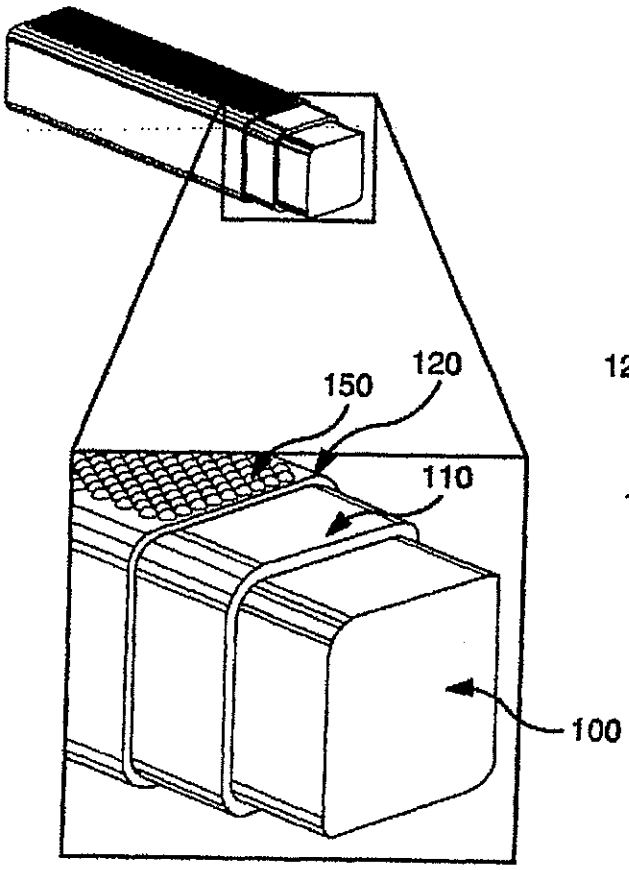

FIG. 7B

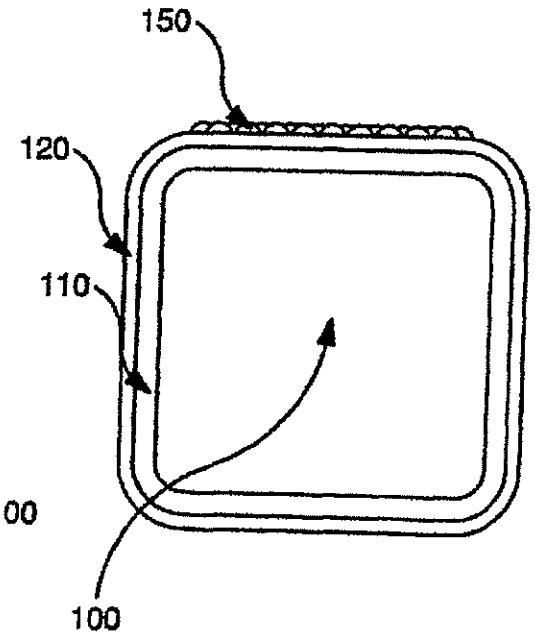

FIG. 7C

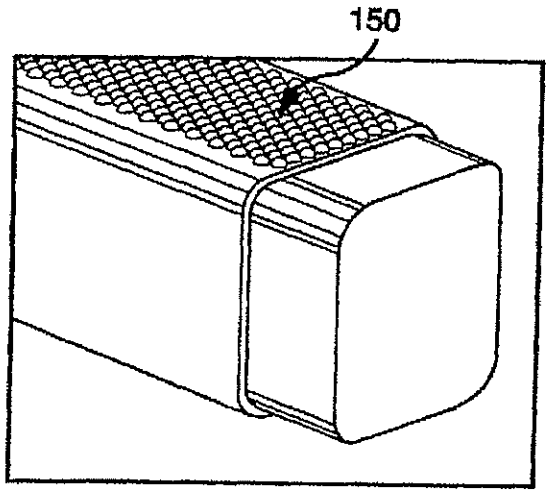

FIG. 8A

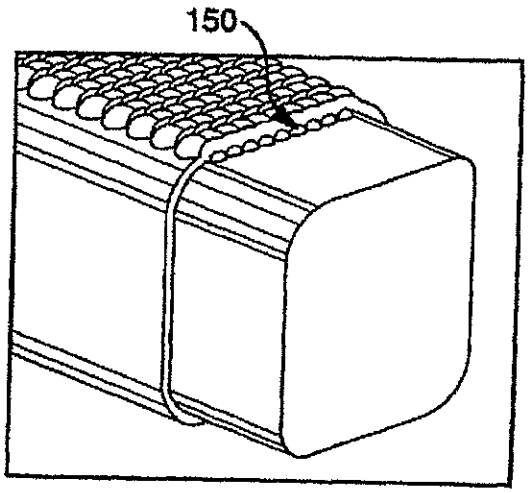

FIG. 8B

FIG. 9A

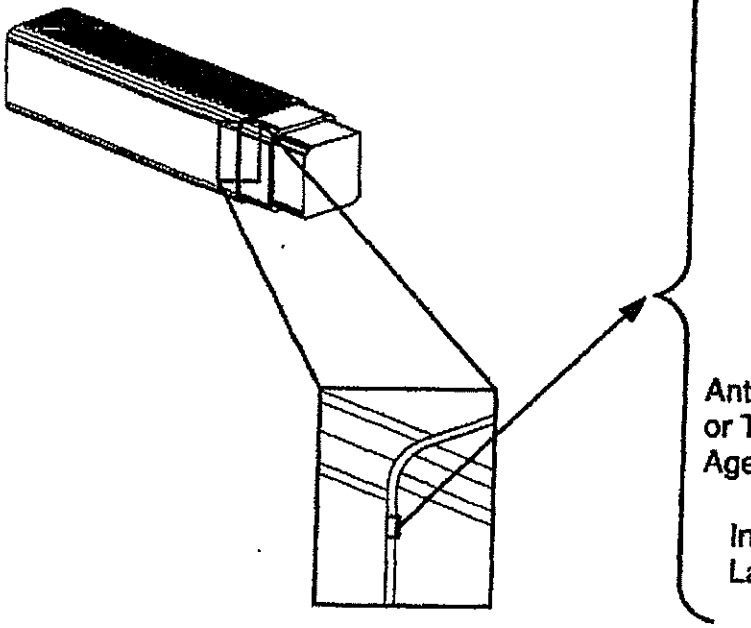

FIG. 9B

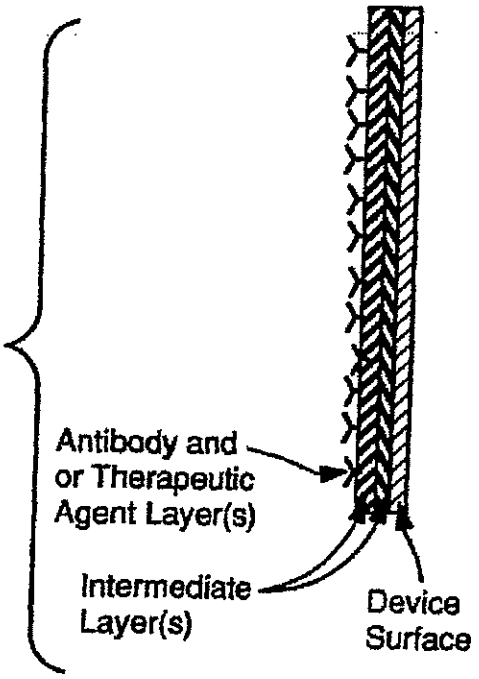

FIG. 9C

FIG. 10A-1

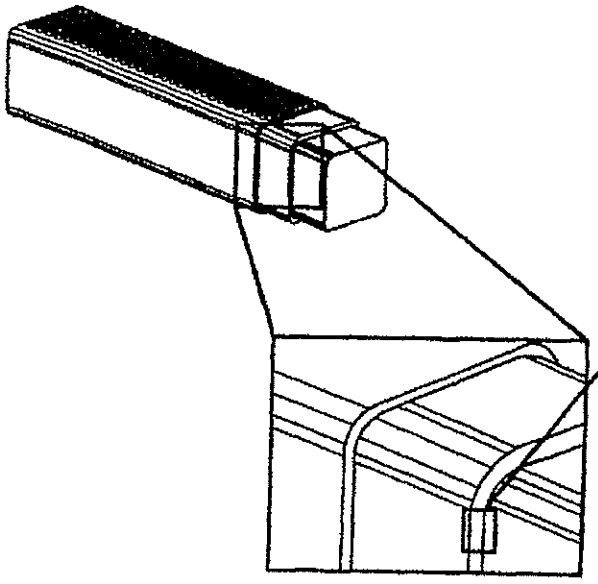

FIG. 10A-2

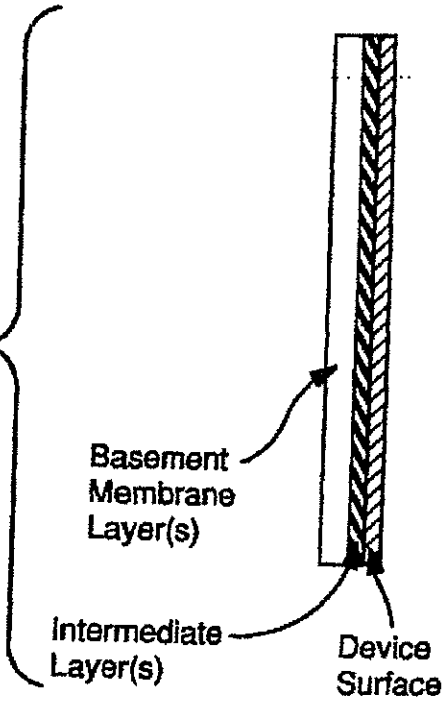

FIG. 10A-3

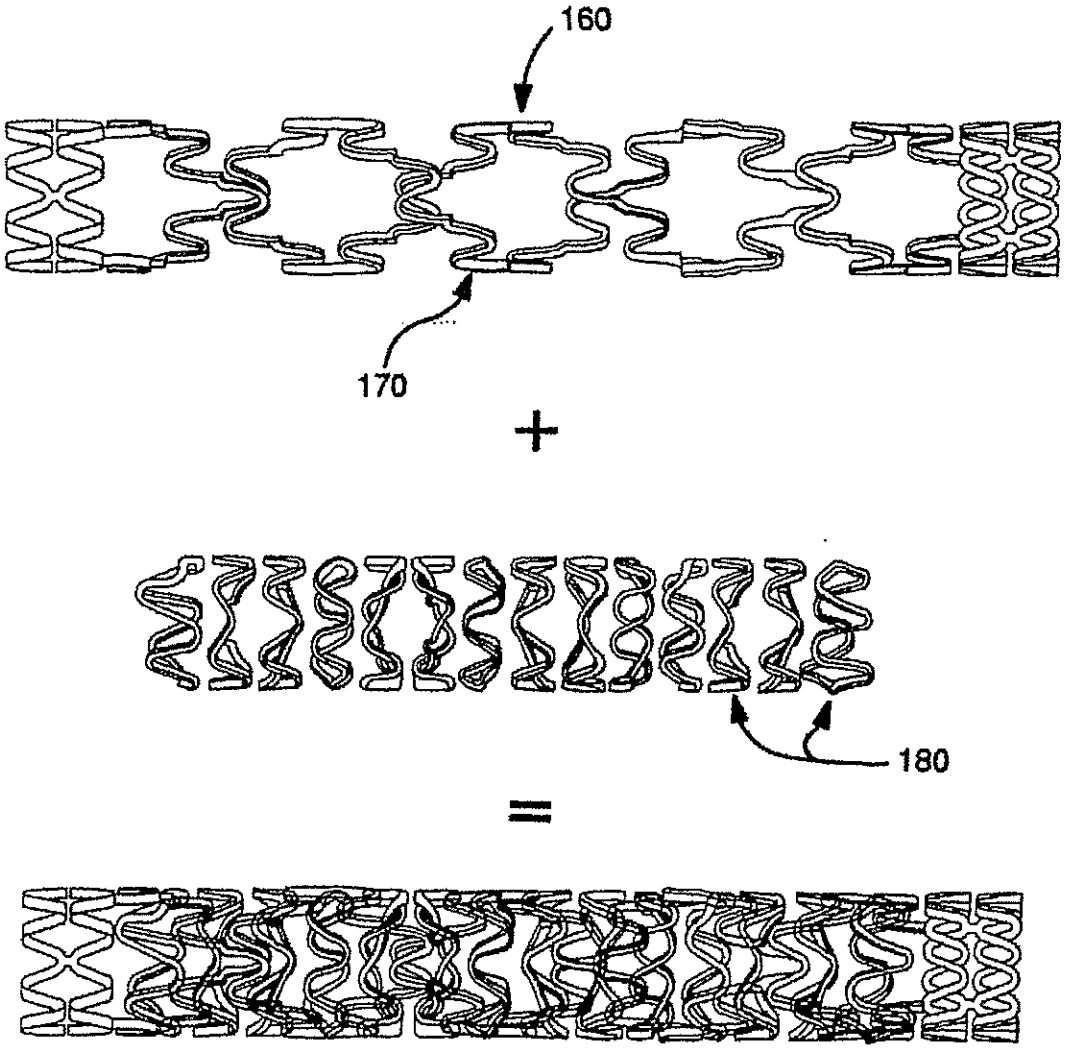

FIG. 10B

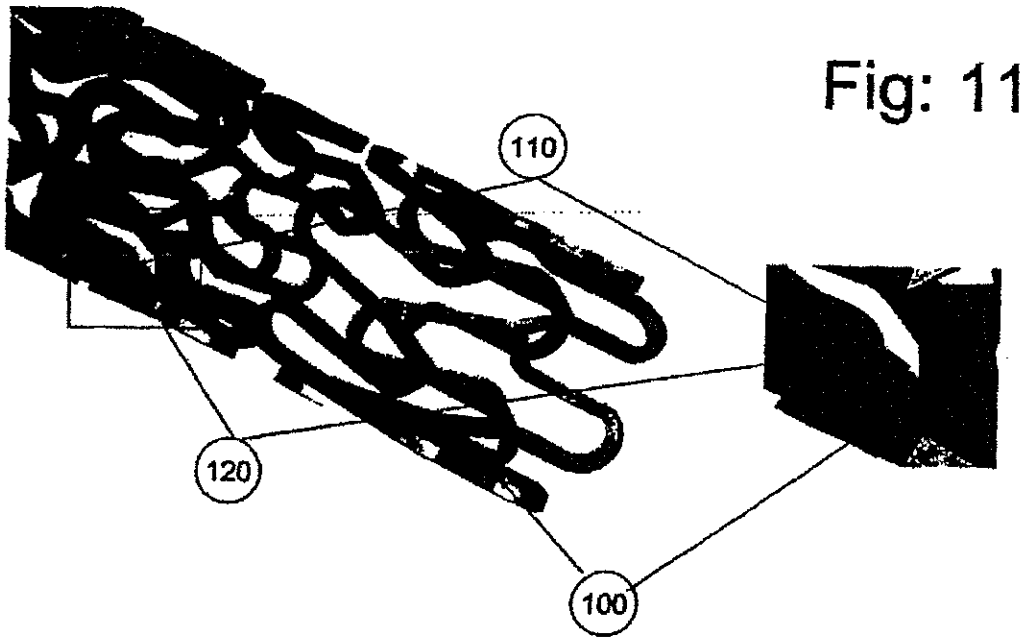

Fig: 11

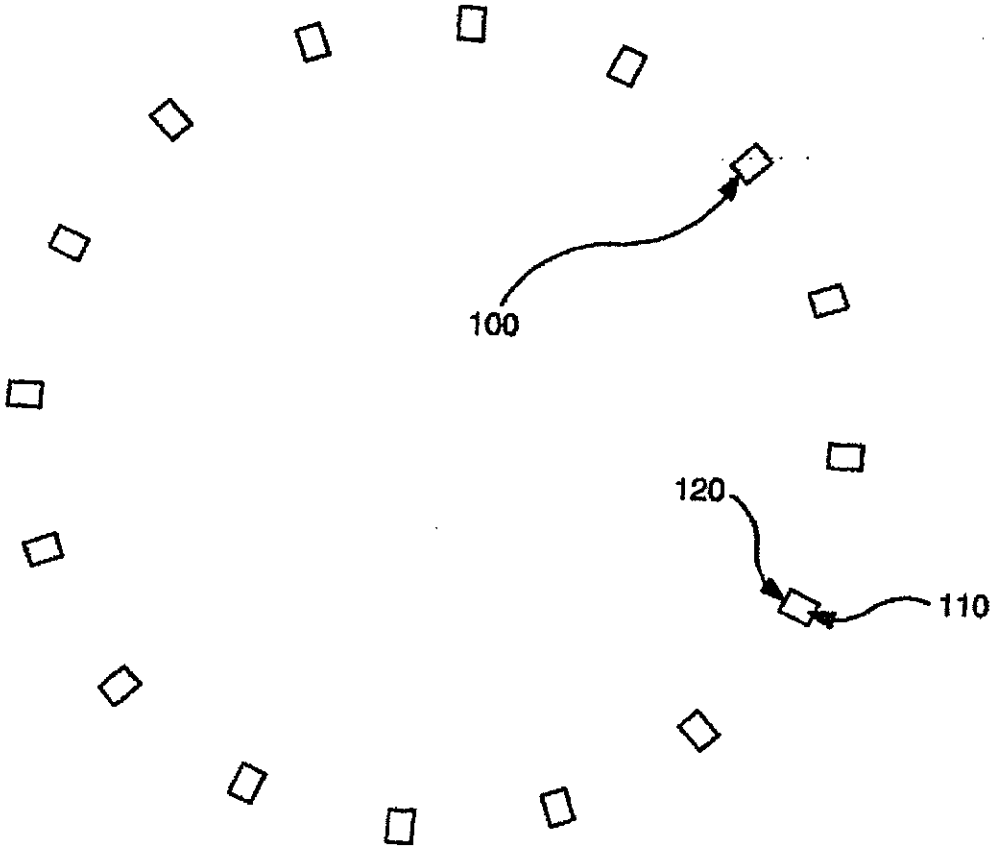

FIG. 12

FIG. 13

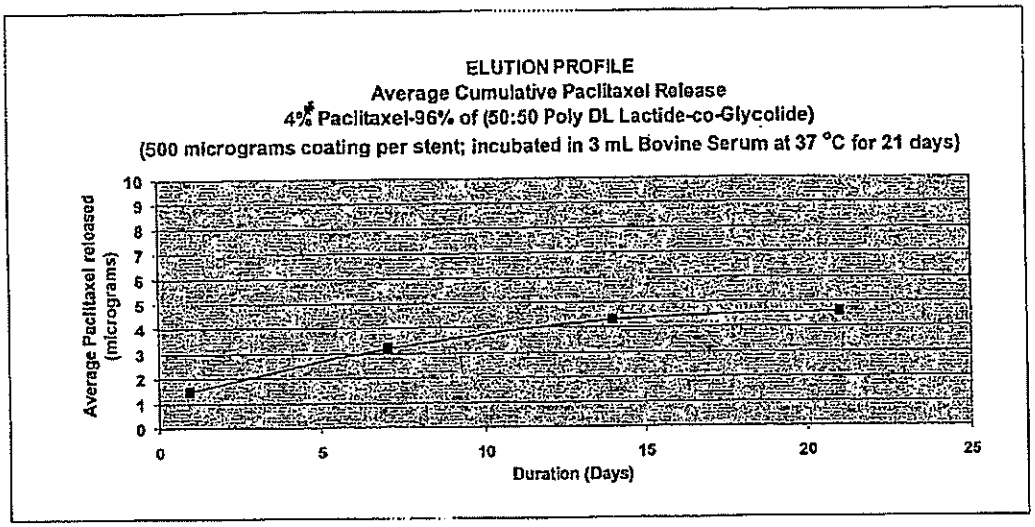
ELUTION PROFILE
Average Cumulative Paclitaxel Release
4% Paclitaxel-96% of (50:50 Poly DL Lactide-co-Glycolide)
(500 micrograms coating per stent; incubated in 3 mL Bovine Serum at 37 °C for 21 days)
Average Paclitaxel released (micrograms)
0
1
2
3
4
5
6
7
8
9
10
0
5
10
15
20
25
Duration (Days)

FIG. 14

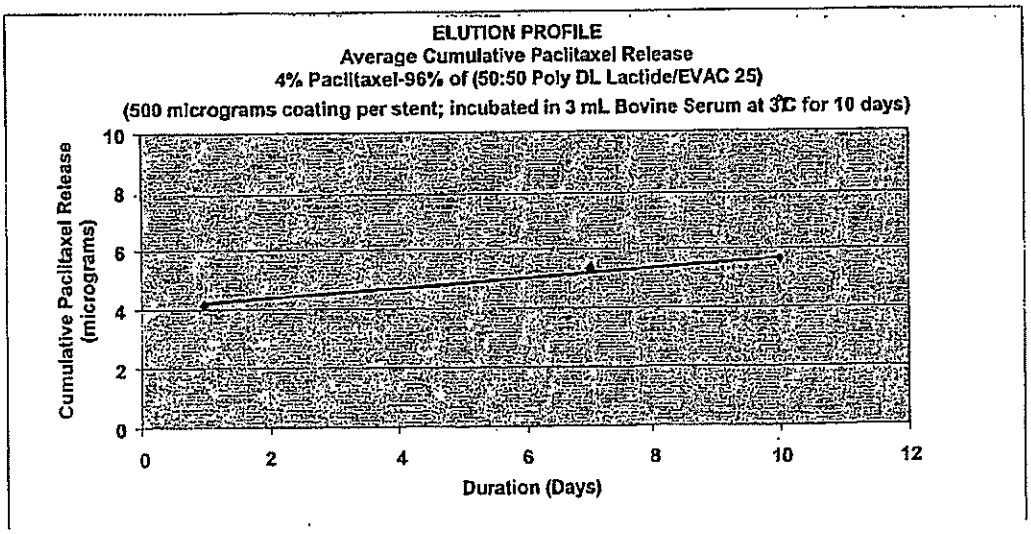
ELUTION PROFILE
Average Cumulative Paclitaxel Release
4% Paclitaxel-96% of (50:50 Poly DL Lactide/EVAC 25)
(500 micrograms coating per stent; incubated in 3 mL Bovine Serum at 37C for 10 days)
Cumulative Paclitaxel Release (micrograms)
0
2
4
6
8
10
0
2
4
6
8
10
12
Duration (Days)

FIG. 15

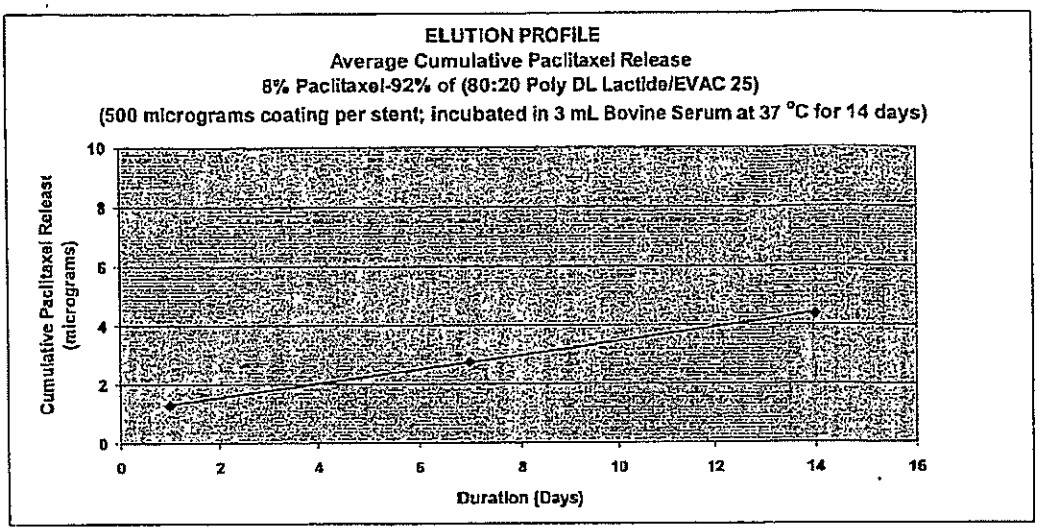
ELUTION PROFILE
Average Cumulative Paclitaxel Release
8% Paclitaxel-92% of (80:20 Poly DL Lactide/EVAC 25)
(500 micrograms coating per stent; incubated in 3 mL Bovine Serum at 37 °C for 14 days)
Cumulative Paclitaxel Release (micrograms)
0
2
4
6
8
10
0
2
4
6
8
10
12
14
16
Duration (Days)

FIG. 16

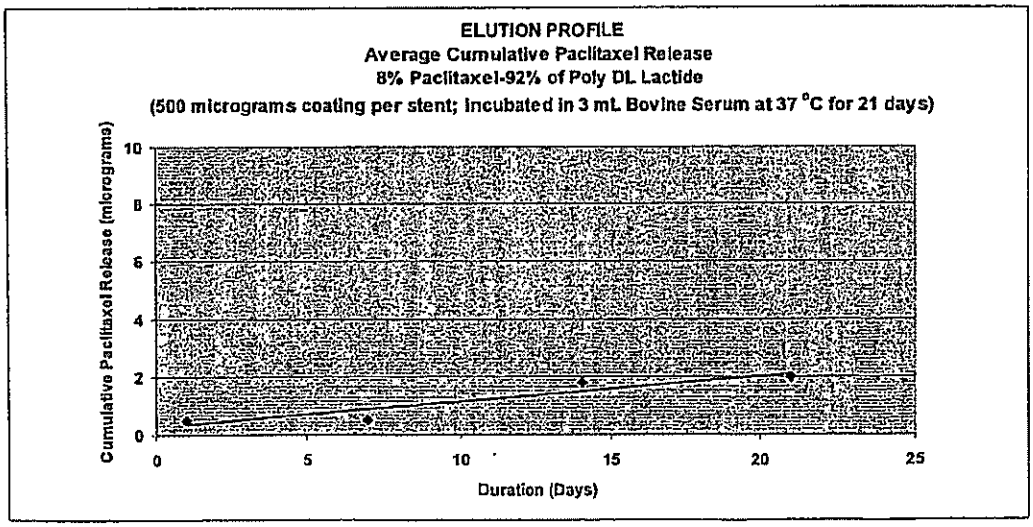
ELUTION PROFILE
Average Cumulative Paclitaxel Release
8% Paclitaxel-92% of Poly DL Lactide
(500 micrograms coating per stent; incubated in 3 mL Bovine Serum at 37 °C for 21 days)
Cumulative Paclitaxel Release (micrograms)
0
2
4
6
8
10
0
5
10
15
20
25
Duration (Days)

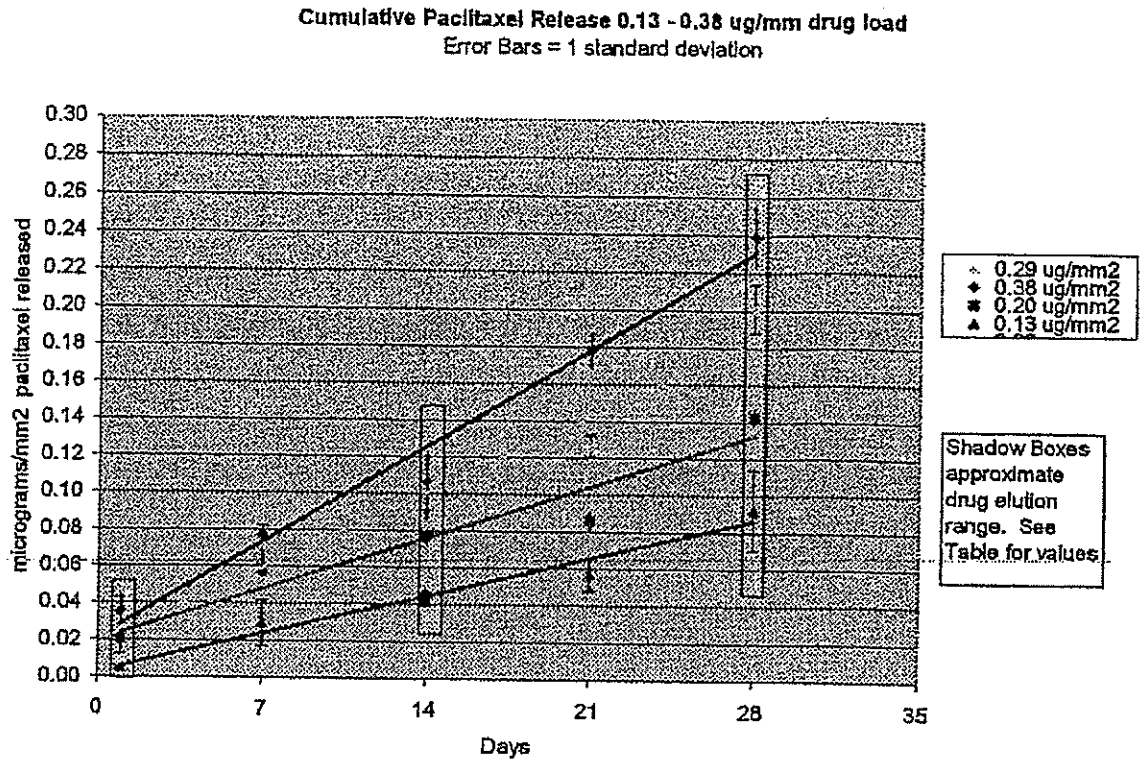
Cumulative Paclitaxel Release 0.13 - 0.38 ug/mm drug load
Error Bars = 1 standard deviation
micrograms/mm2 paclitaxel released
0.30
0.28
0.26
0.24
0.22
0.20
0.18
0.16
0.14
0.12
0.10
0.08
0.06
0.04
0.02
0.00
0
7
14
21
28
35
Days
0.29 ug/mm2
0.38 ug/mm2
0.20 ug/mm2
0.13 ug/mm2
Shadow Boxes approximate drug elution range. See Table for values

FIG. 17

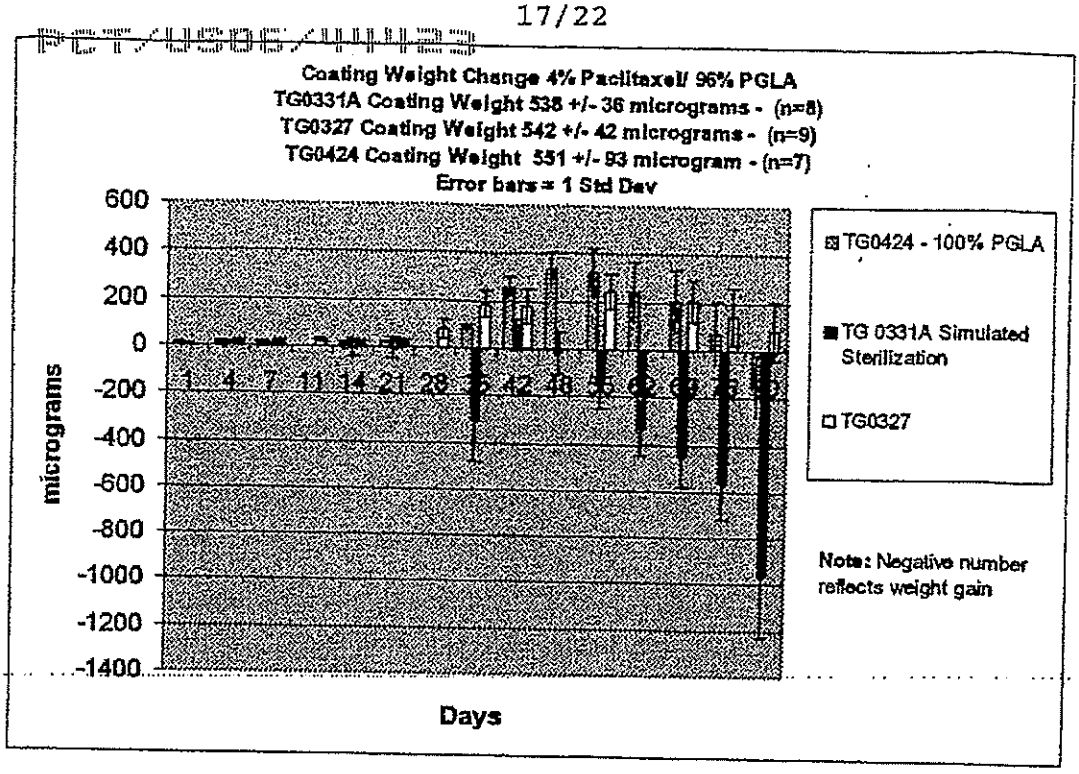
Coating Weight Change 4% Paclitaxel/ 96% PGLA
TG0331A Coating Weight 538 +/- 36 micrograms - (n=8)
TG0327 Coating Weight 542 +/- 42 micrograms - (n=9)
TG0424 Coating Weight 551 +/- 93 microgram - (n=7)
Error bars = 1 Std Dev
600
400
200
0
-200
-400
-600
-800
-1000
-1200
-1400
micrograms
1 4 7 11 14 21 28 42 48
Days
TG0424 - 100% PGLA
TG 0331A Simulated Sterilization
TG0327
Note: Negative number reflects weight gain

FIG. 18

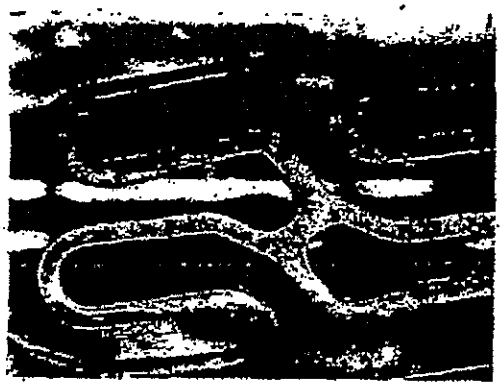

FIG. 19A



FIG. 19B



FIG. 19C

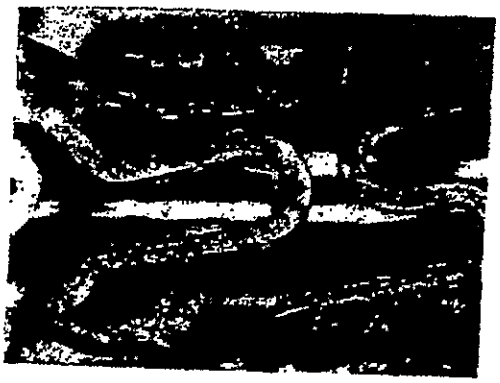

FIG. 19D

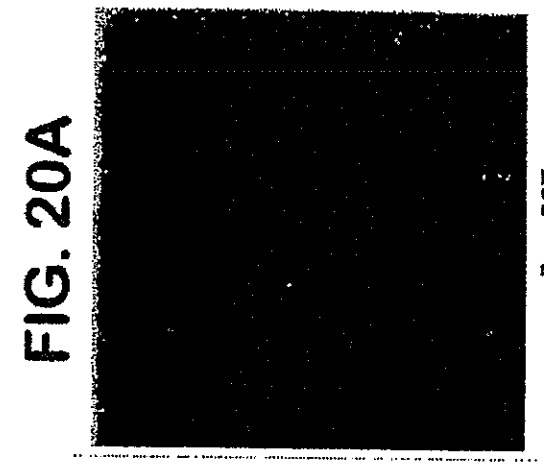

FIG. 20A

Bare SST

All images at 20X



FIG. 20A

Gelatin + A6

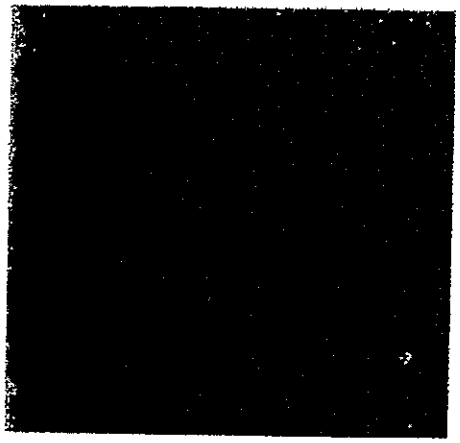

Gelatin

FIG. 20E

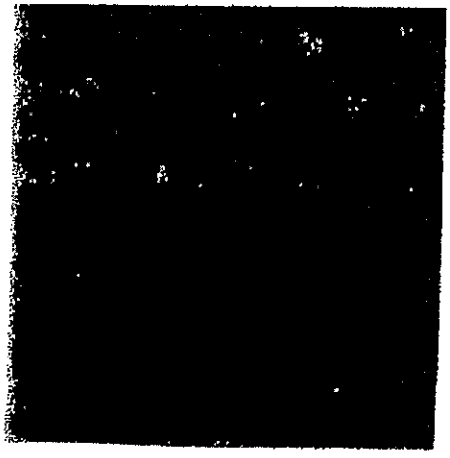

FIG. 20A

CMD_X + A6



CMD_X

FIG. 20D

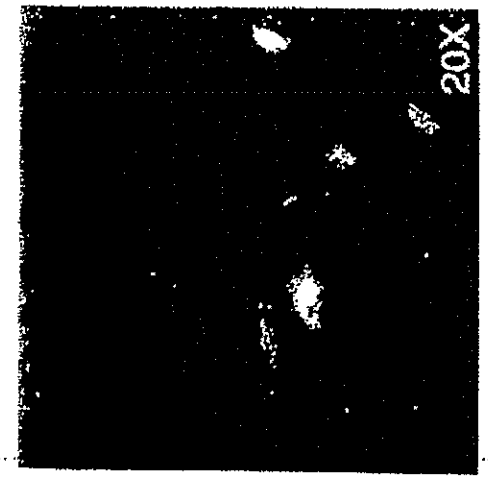

YELLOW-Combo
FIG. 21C



YELLOW-Combo
FIG. 21F



GREEN-KDR/FITC
FIG. 21B

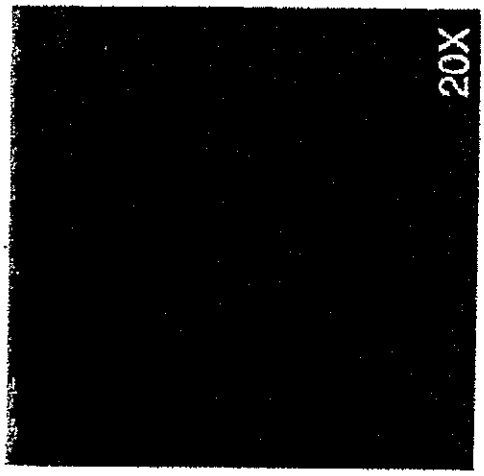

GREEN-KDR/FITC
FIG. 21E

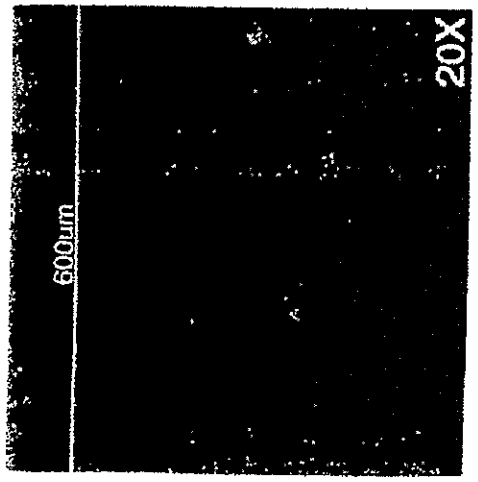

RED-PI-Nuclear
FIG. 21A

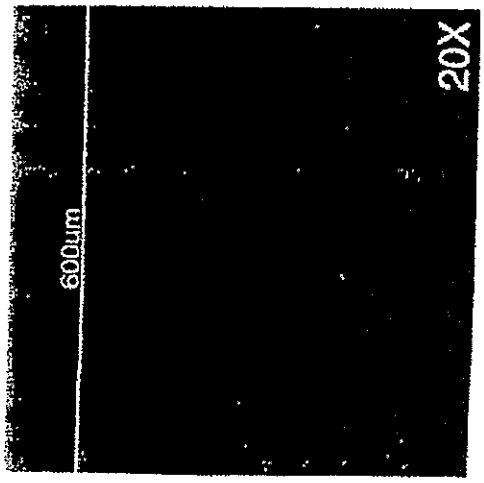

RED-PI-Nuclear
FIG. 21D



YELLOW-Combo

FIG. 22C



GREEN-KDR/FITC

FIG. 22B



RED-PI-Nuclear

FIG. 22A



YELLOW-Combo

FIG. 22F



GREEN-KDR/FITC

FIG. 22E

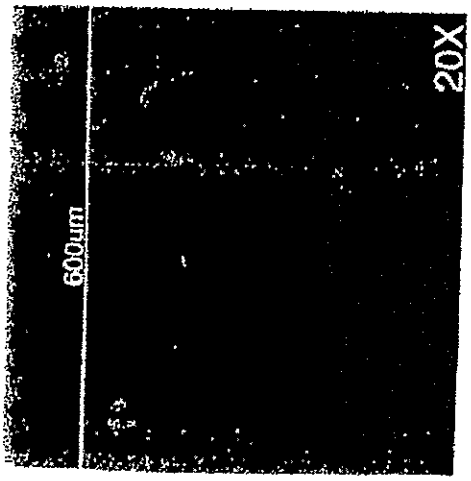

RED-PI-Nuclear

FIG. 22D

FIG. 23A

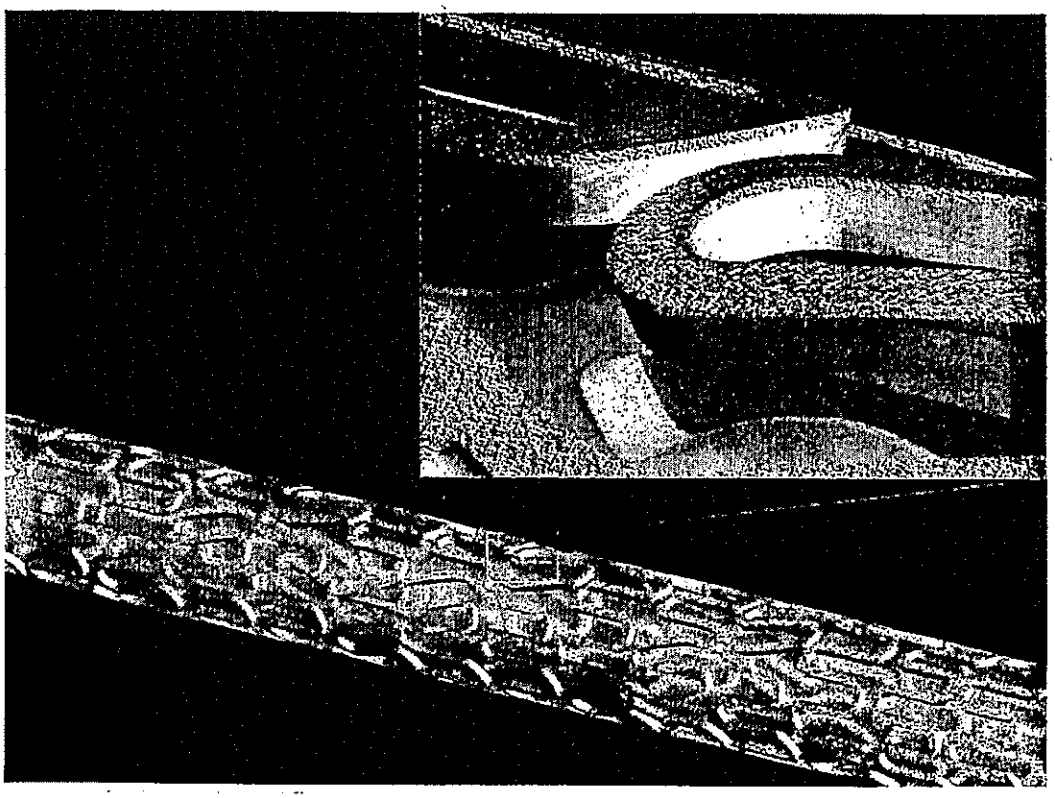

FIG. 23B