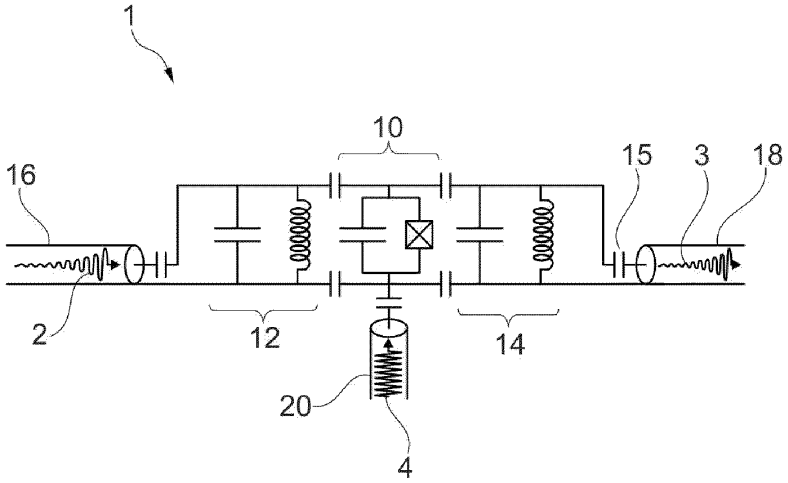

art antérieur
Fig. 1

Figure 2

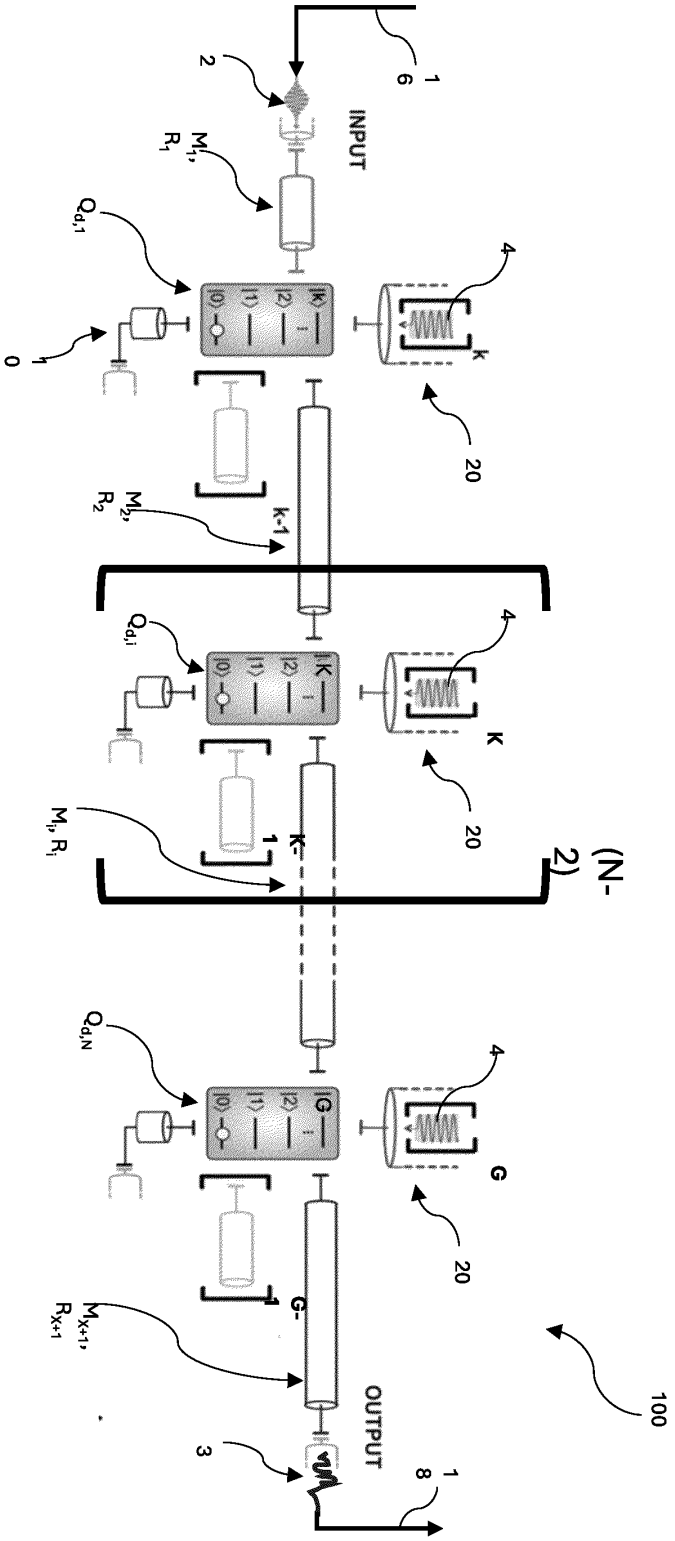

Figure 3

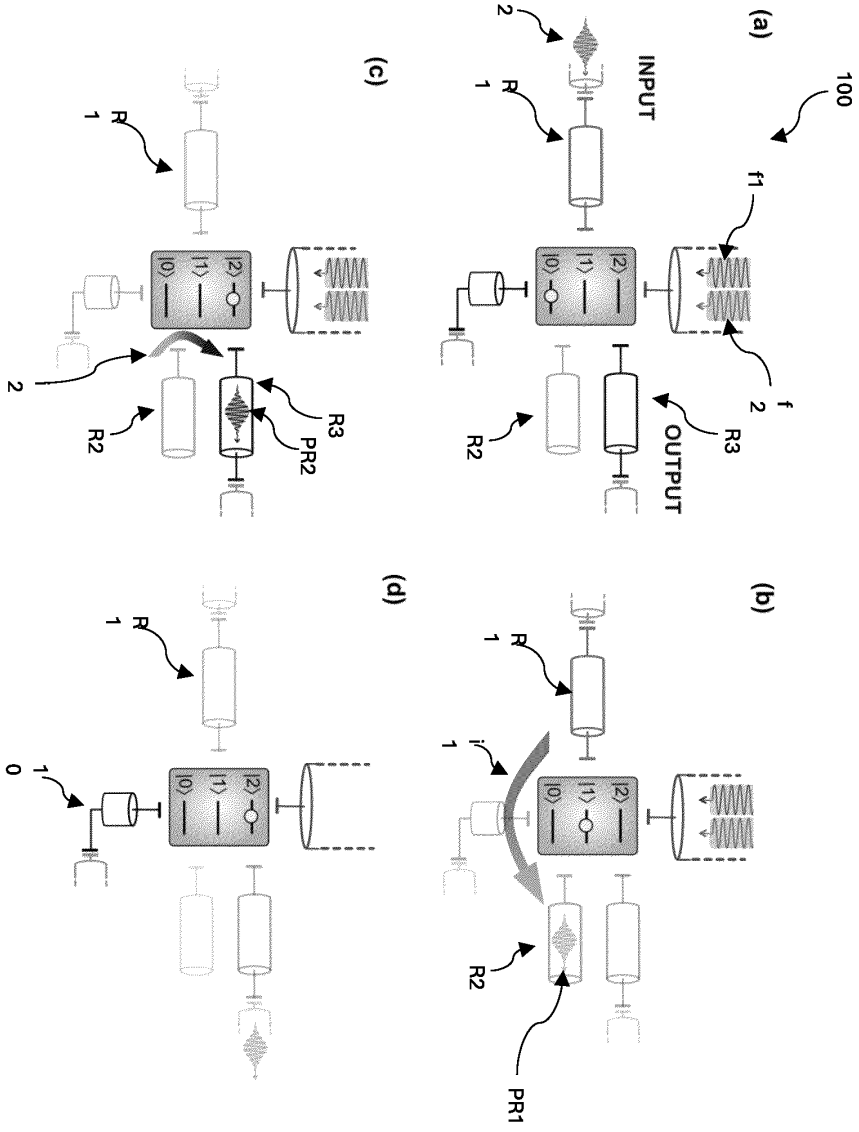

Figure 4

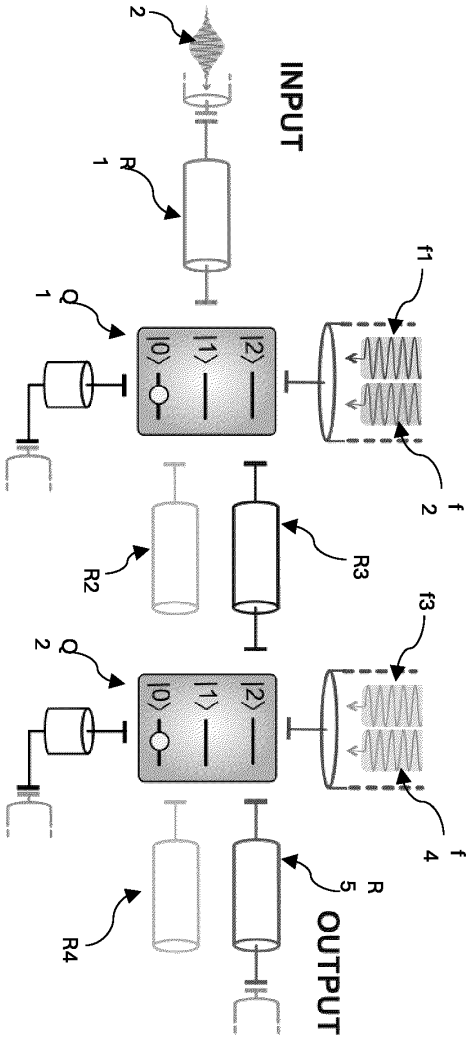

Figure 5

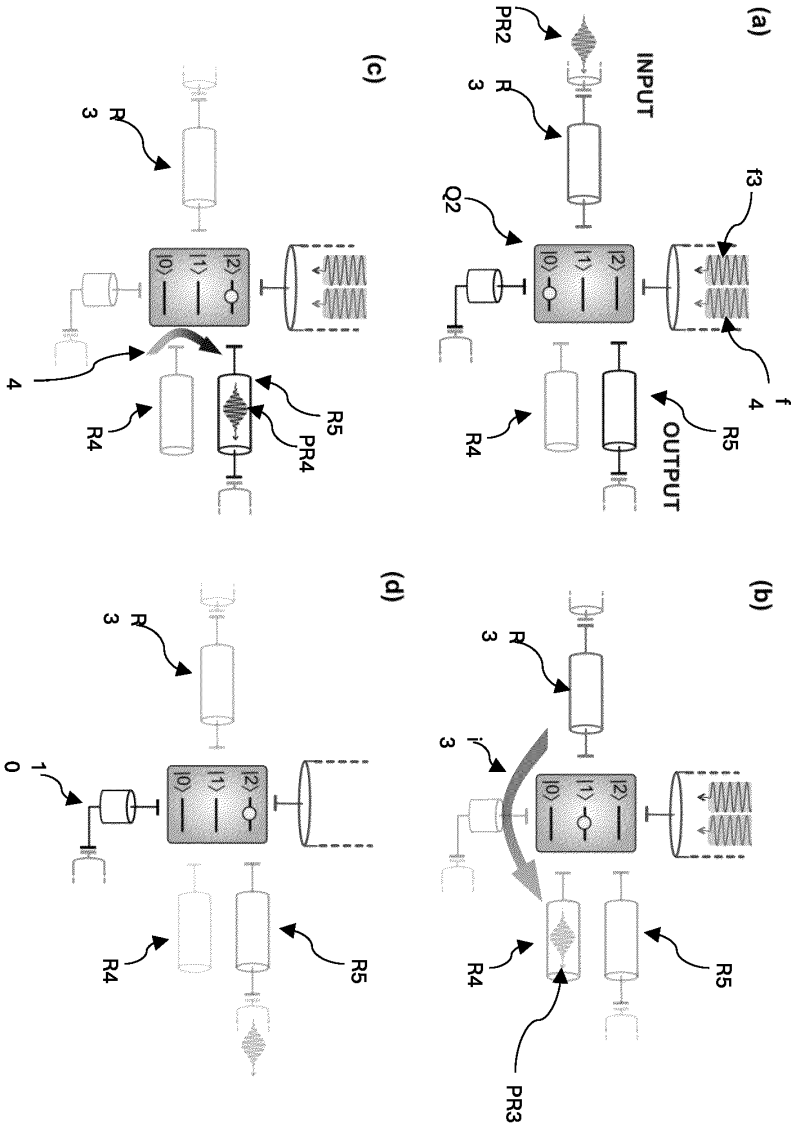
(a)
INPUT
PR2
R 3
Q2
f3
f 4
R4
R5
OUTPUT
(b)
R 3
i 3
R4
R5
PR3
(c)
R 3
4
R4
R5
PR4
(d)
R 3
1 0
R4
R5

Figure 6

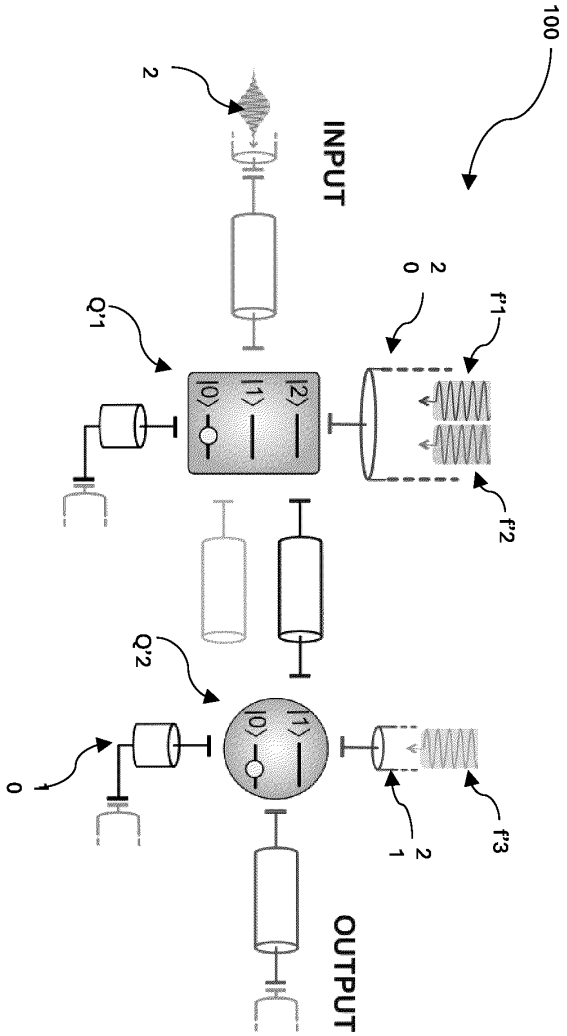

Figures 7

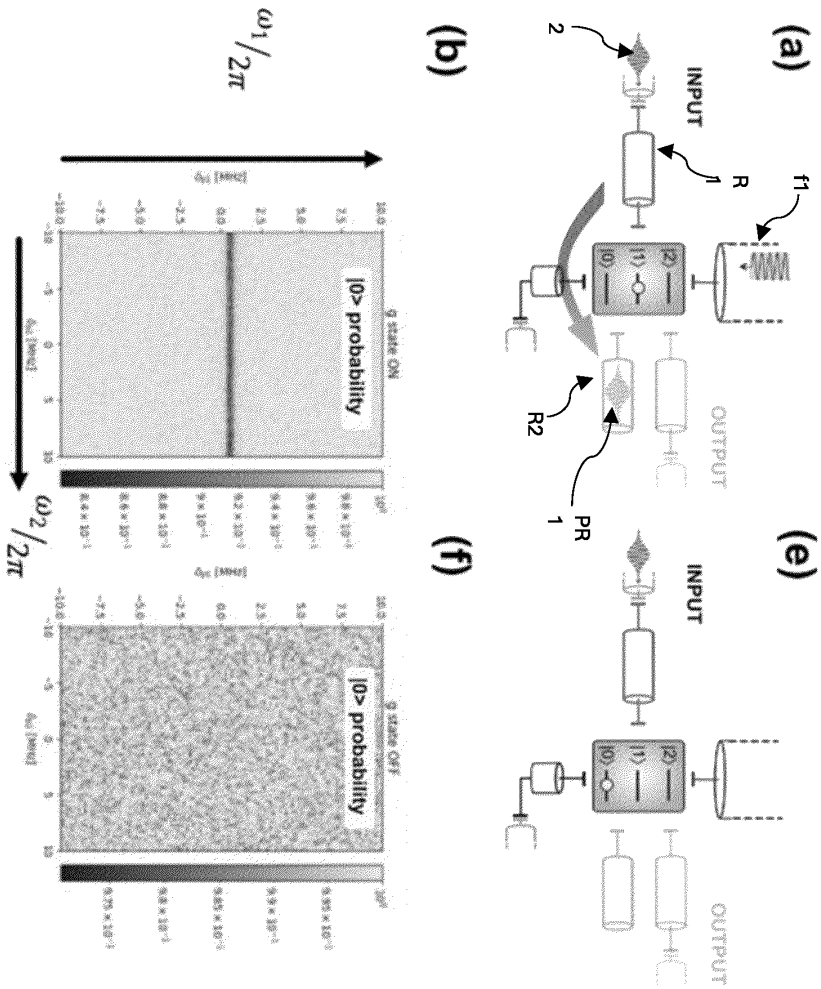
(a)
INPUT
R
f1
2
R2
PR
1
OUTPUT
(e)
INPUT
OUTPUT
(b)
(f)
|0> probability
g state ON
g state OFF

Figures 7

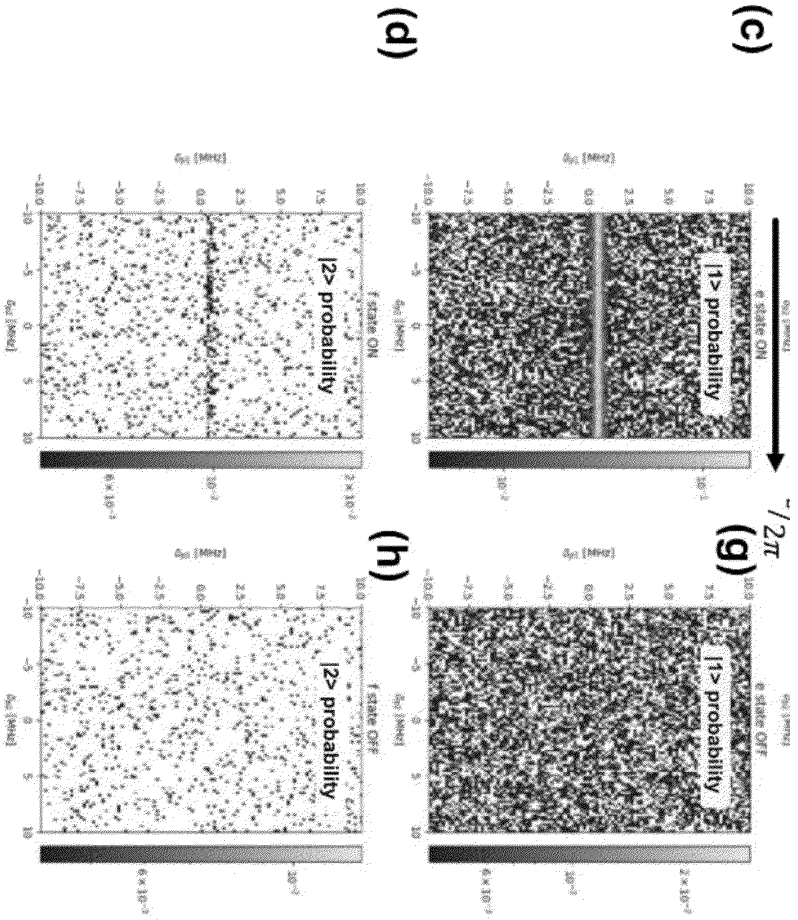
(c)
(d)
(g)
(h)
e state ON
e state OFF
f state ON
f state OFF
|1> probability
|2> probability
$\tau/2\pi$

Figures 8

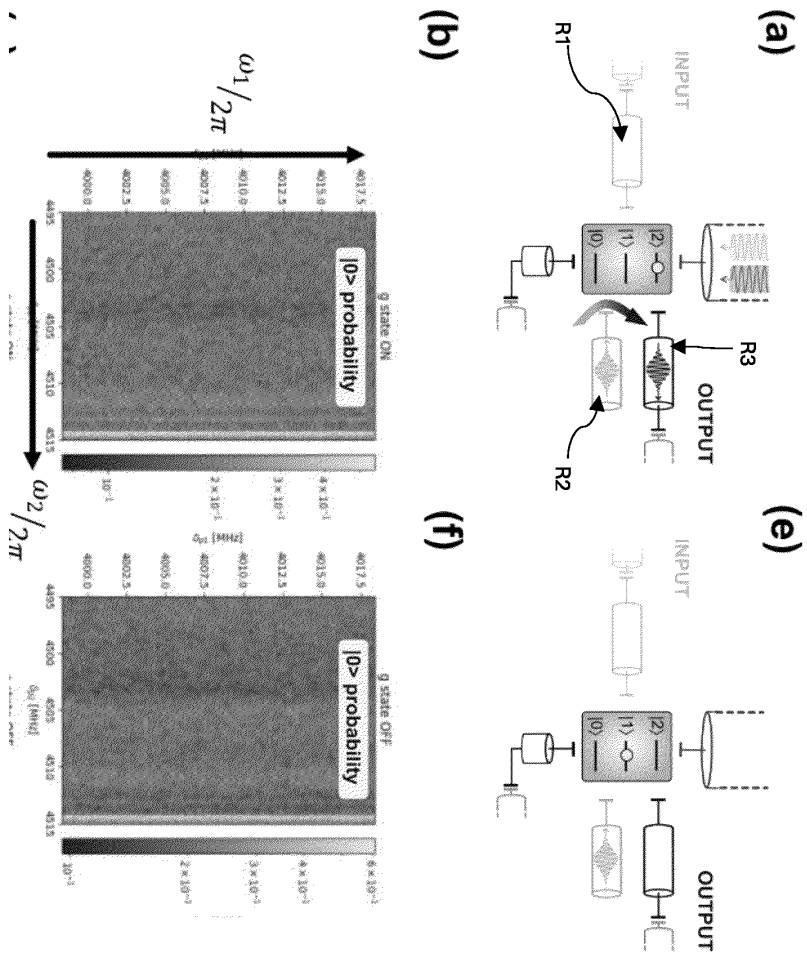
(a)
INPUT
R1
R2
R3
OUTPUT
(b)
(e)
INPUT
OUTPUT
(f)
|0> probability
g state ON
g state OFF
$\omega_1/2\pi$
$\omega_2/2\pi$

Figures 8

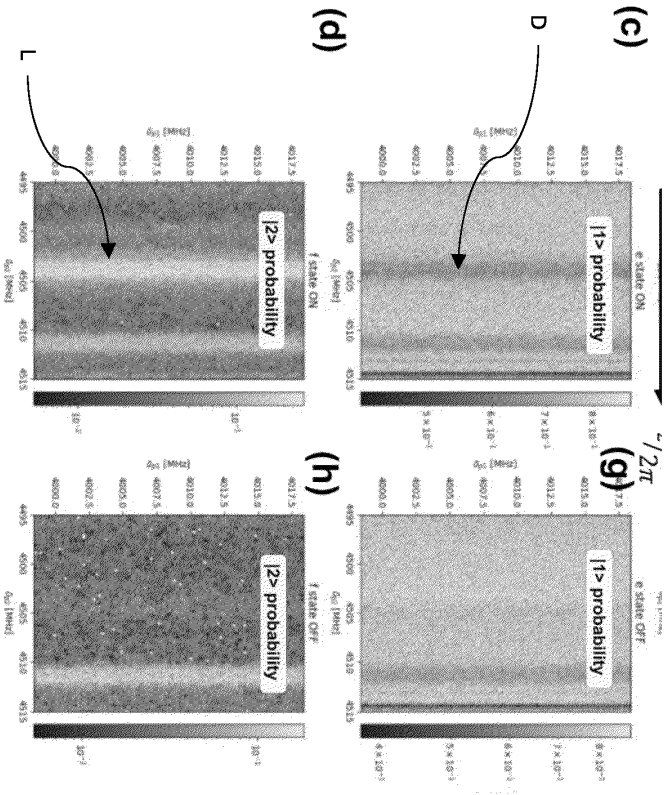
(c)
(d)
(g)
(h)
D
L
|1> probability
|2> probability
e state ON
e state OFF
f state ON
f state OFF
~/ 2π

Figures 9

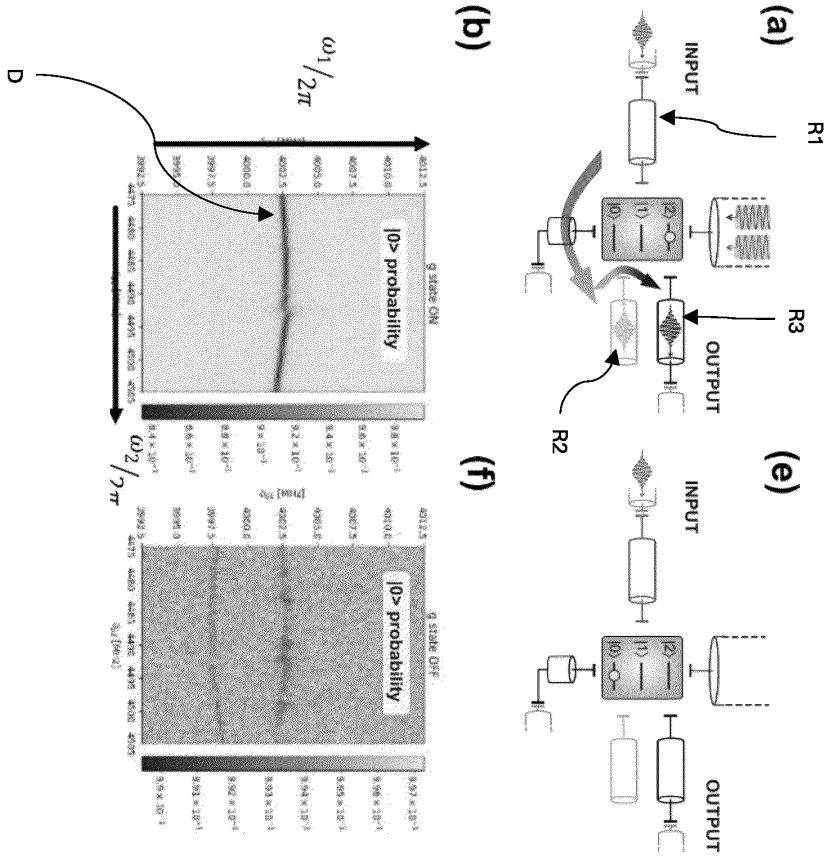
(a)
INPUT
R1
R3
R2
OUTPUT
|2⟩
|1⟩
|0⟩
(b)
D
$\omega_1/2\pi$
$\omega_2/2\pi$
|0> probability
Q state ON
(e)
INPUT
OUTPUT
(f)
|0> probability
Q state OFF

Figures 9

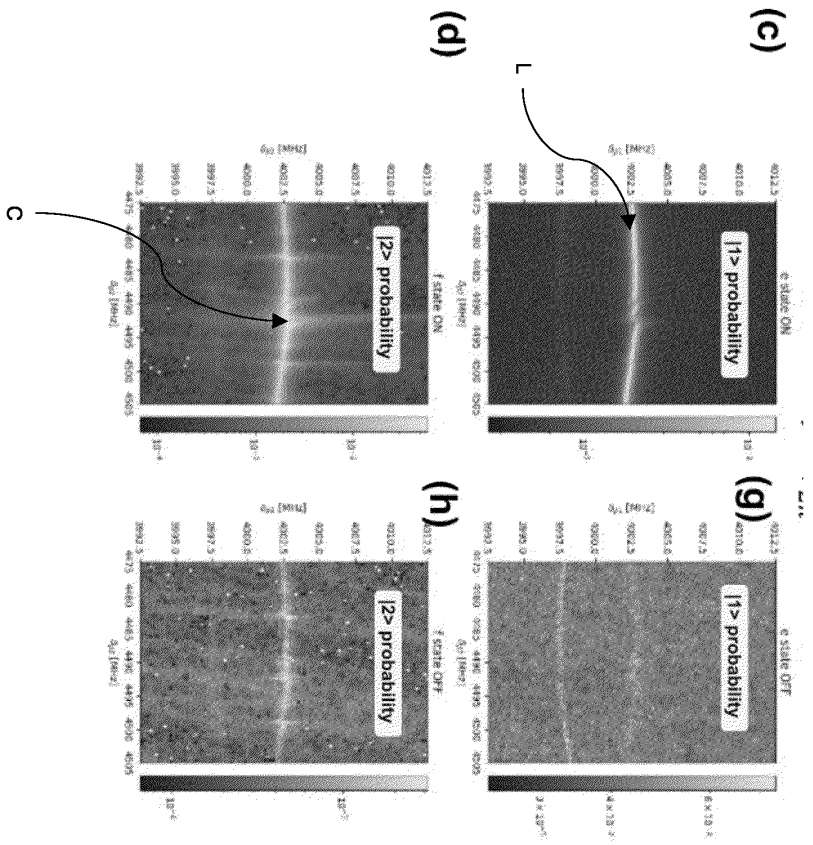
(c)
(d)
(g)
(h)
|1> probability
|2> probability
e state ON
e state OFF
f state ON
f state OFF
c
L

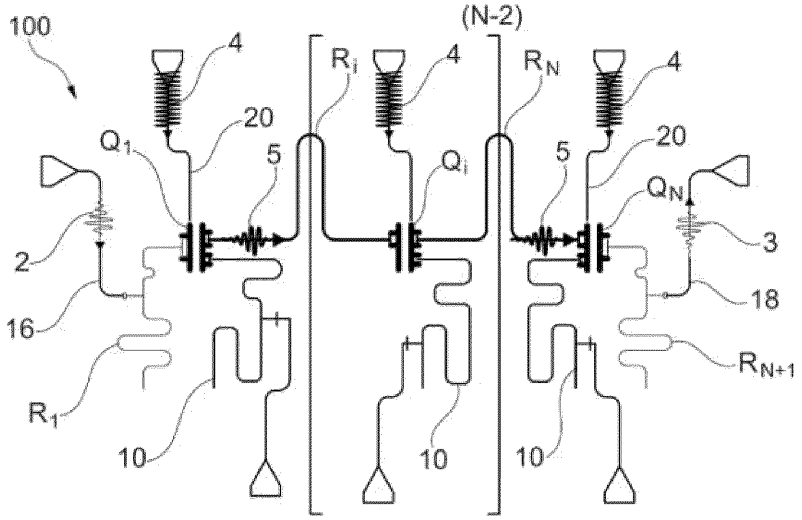

Fig. 10

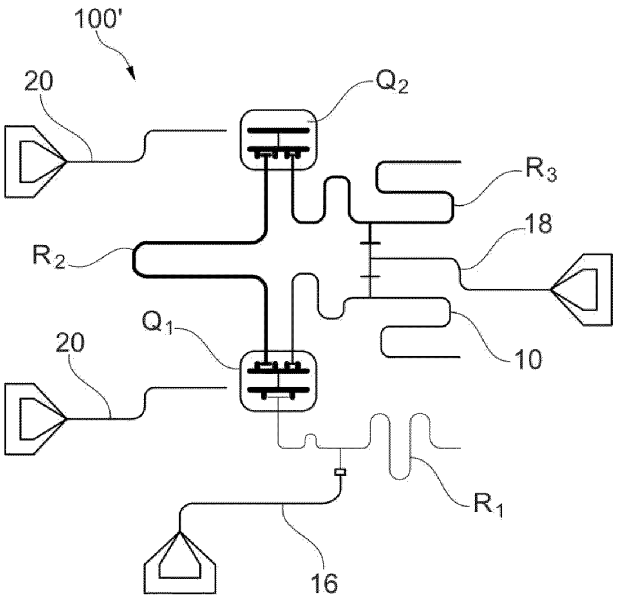

Fig. 11

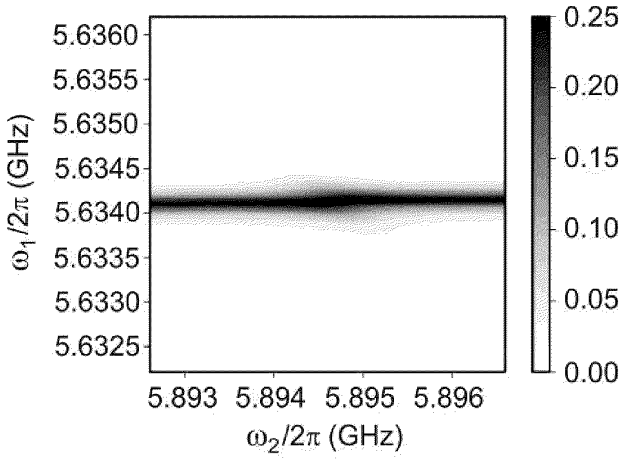
5.6360
5.6355
5.6350
5.6345
5.6340
5.6335
5.6330
5.6325
ω1/2π (GHz)
5.893
5.894
5.895
5.896
ω2/2π (GHz)
0.25
0.20
0.15
0.10
0.05
0.00

Fig. 12

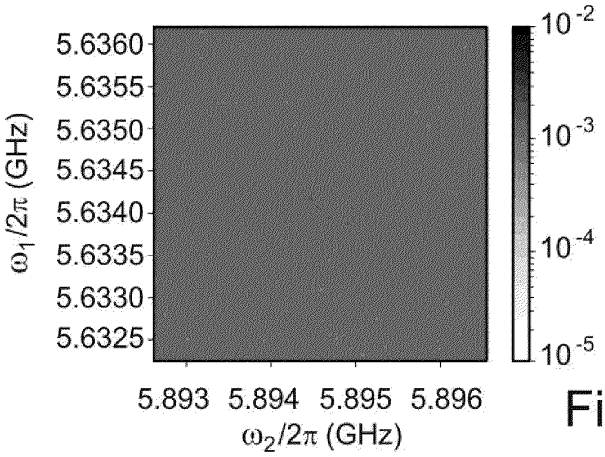
5.6360
5.6355
5.6350
5.6345
5.6340
5.6335
5.6330
5.6325
$\omega_1/2\pi$ (GHz)
5.893 5.894 5.895 5.896
$\omega_2/2\pi$ (GHz)
10^{-2}
10^{-3}
10^{-4}
10^{-5}

Fig. 13

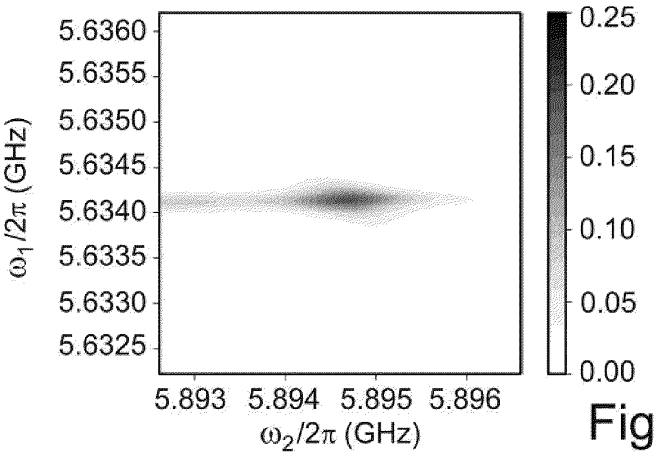
5.6360
5.6355
5.6350
5.6345
5.6340
5.6335
5.6330
5.6325
$\omega_1/2\pi$ (GHz)
5.893
5.894
5.895
5.896
$\omega_2/2\pi$ (GHz)
0.25
0.20
0.15
0.10
0.05
0.00

Fig. 14

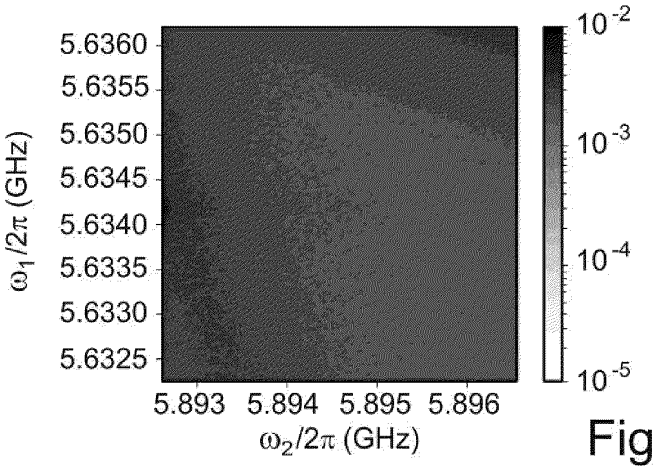
5.6360
5.6355
5.6350
5.6345
5.6340
5.6335
5.6330
5.6325
$\omega_1/2\pi$ (GHz)
5.893
5.894
5.895
5.896
$\omega_2/2\pi$ (GHz)
10^{-2}
10^{-3}
10^{-4}
10^{-5}

Fig. 15

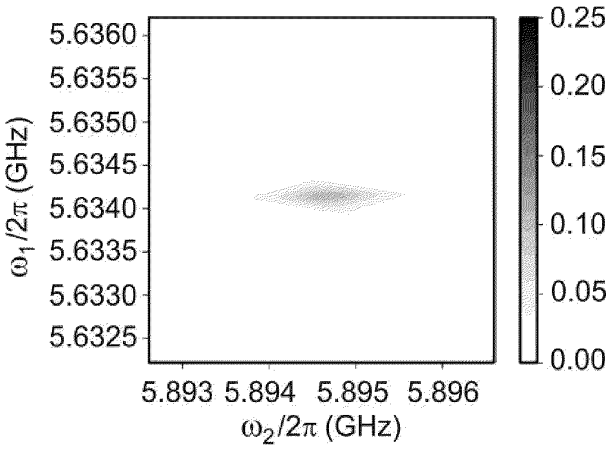
5.6360
5.6355
5.6350
5.6345
5.6340
5.6335
5.6330
5.6325
$\omega_1/2\pi$ (GHz)
5.893 5.894 5.895 5.896
$\omega_2/2\pi$ (GHz)
0.25
0.20
0.15
0.10
0.05
0.00

Fig 16

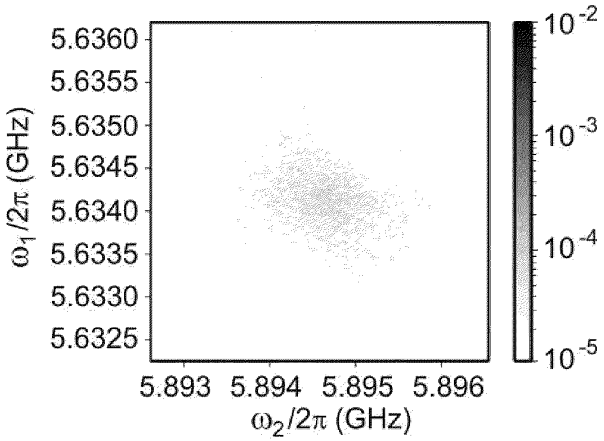
5.6360
5.6355
5.6350
5.6345
5.6340
5.6335
5.6330
5.6325
ω1/2π (GHz)
5.893
5.894
5.895
5.896
ω2/2π (GHz)
10-2
10-3
10-4
10-5

Fig.17

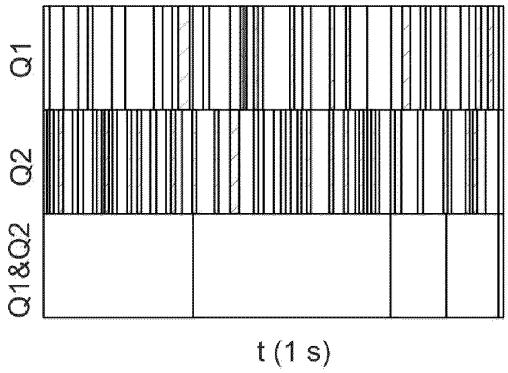

Fig. 18

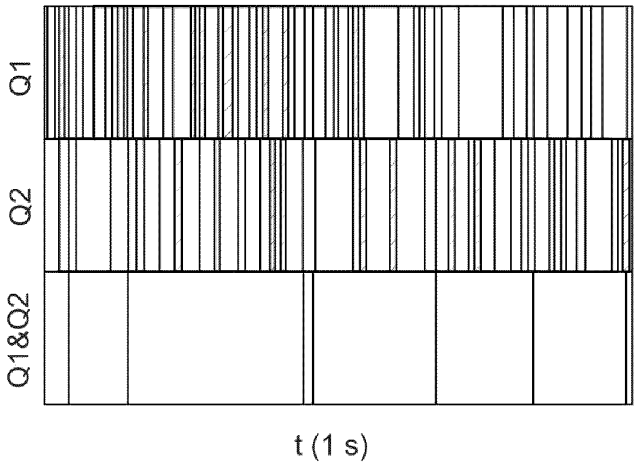

Fig. 19

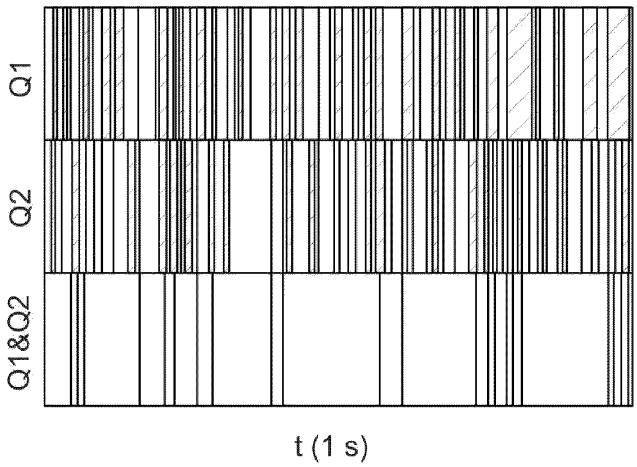

Fig. 20

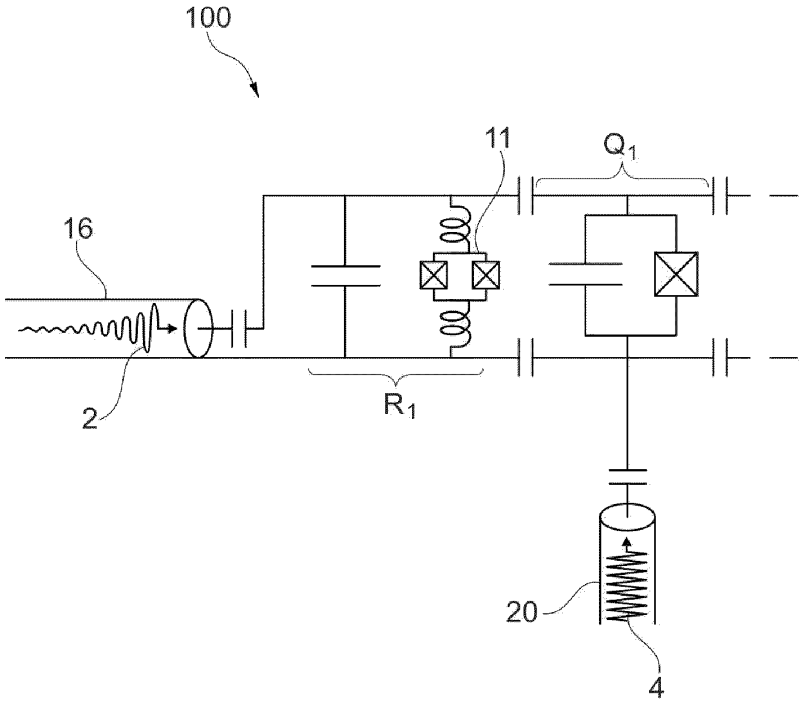

Fig. 21