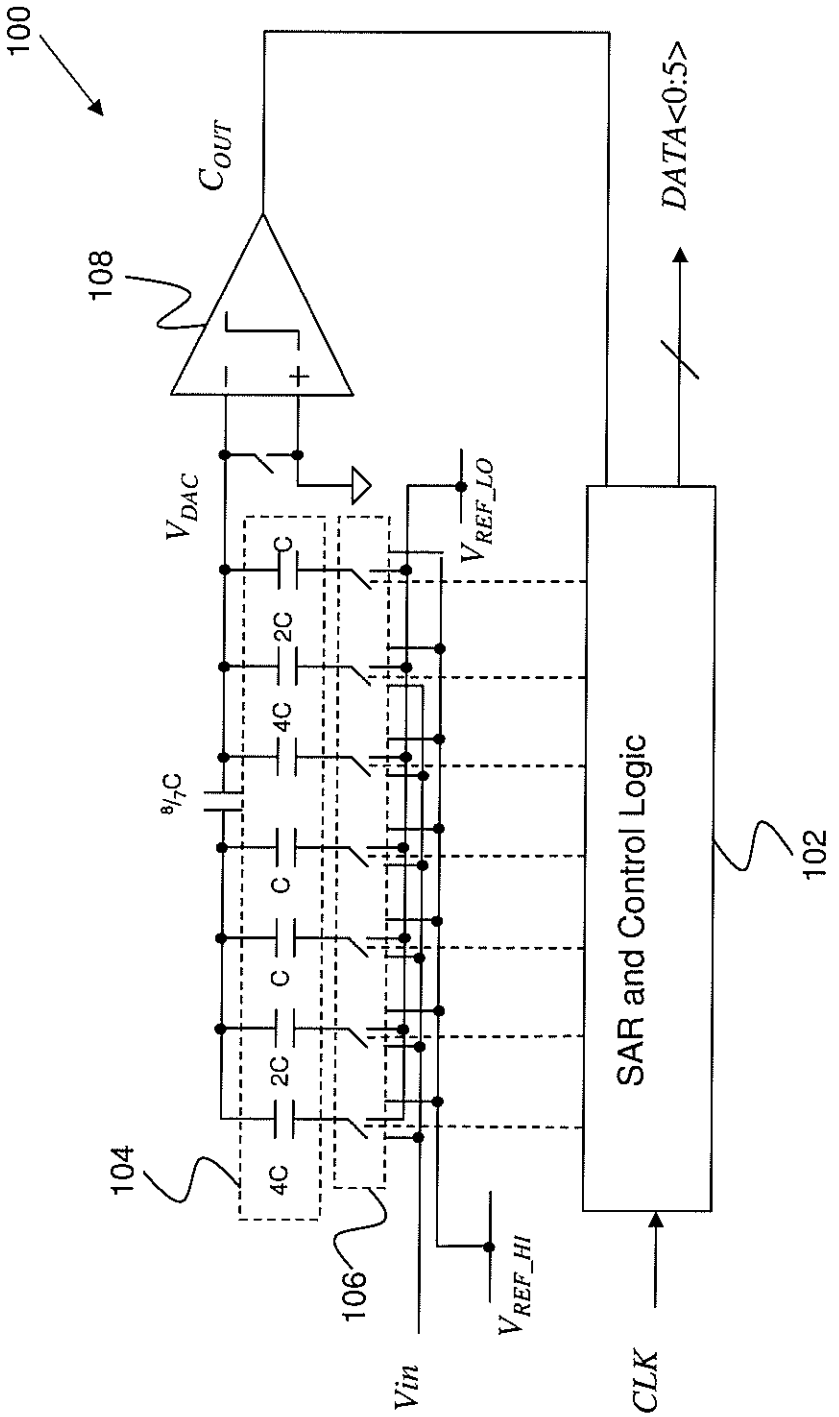
100
C_{OUT}
108
V_{DAC}
V_{REF_LO}
$DATA<0:5>$
C
2C
4C
8/7C
C
C
2C
4C
104
106
V_{REF_HI}
Vin
CLK
SAR and Control Logic
102

Figure 1

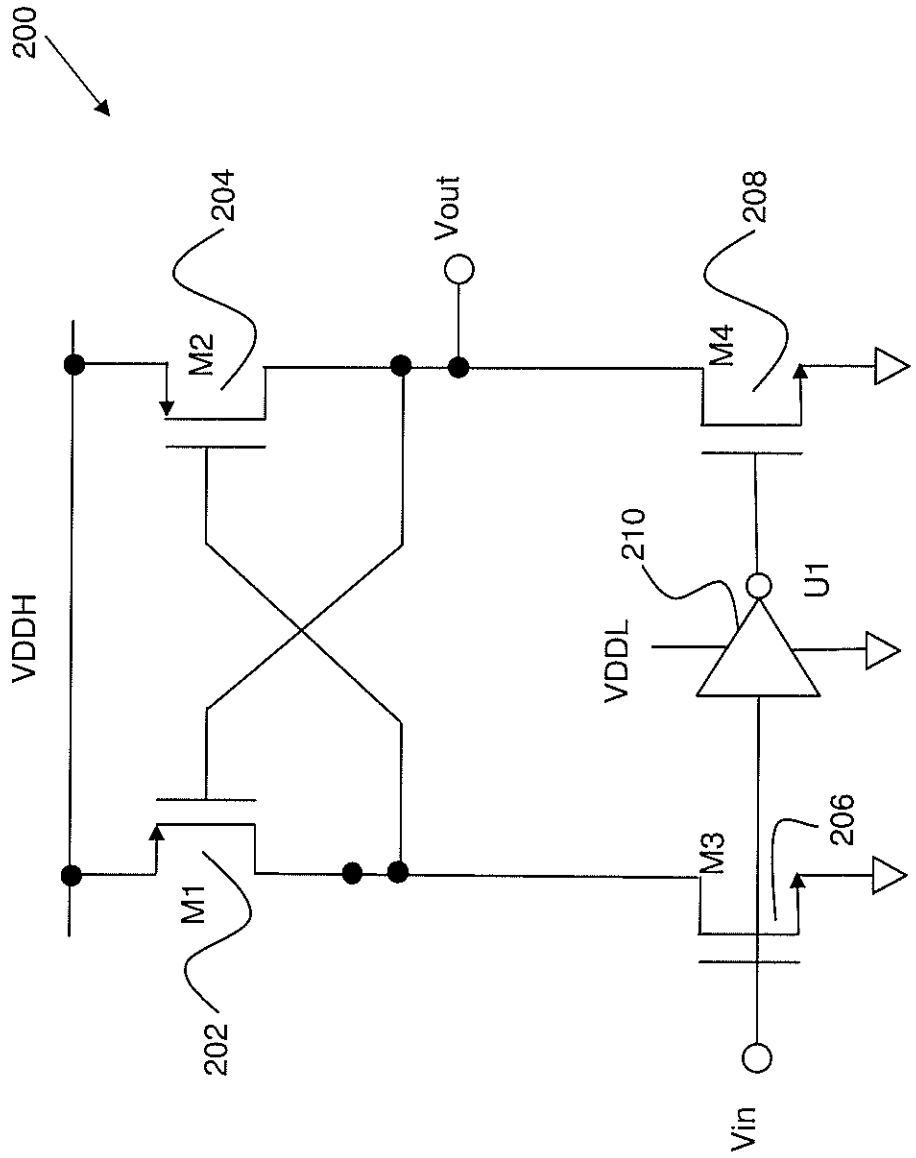

Figure 2

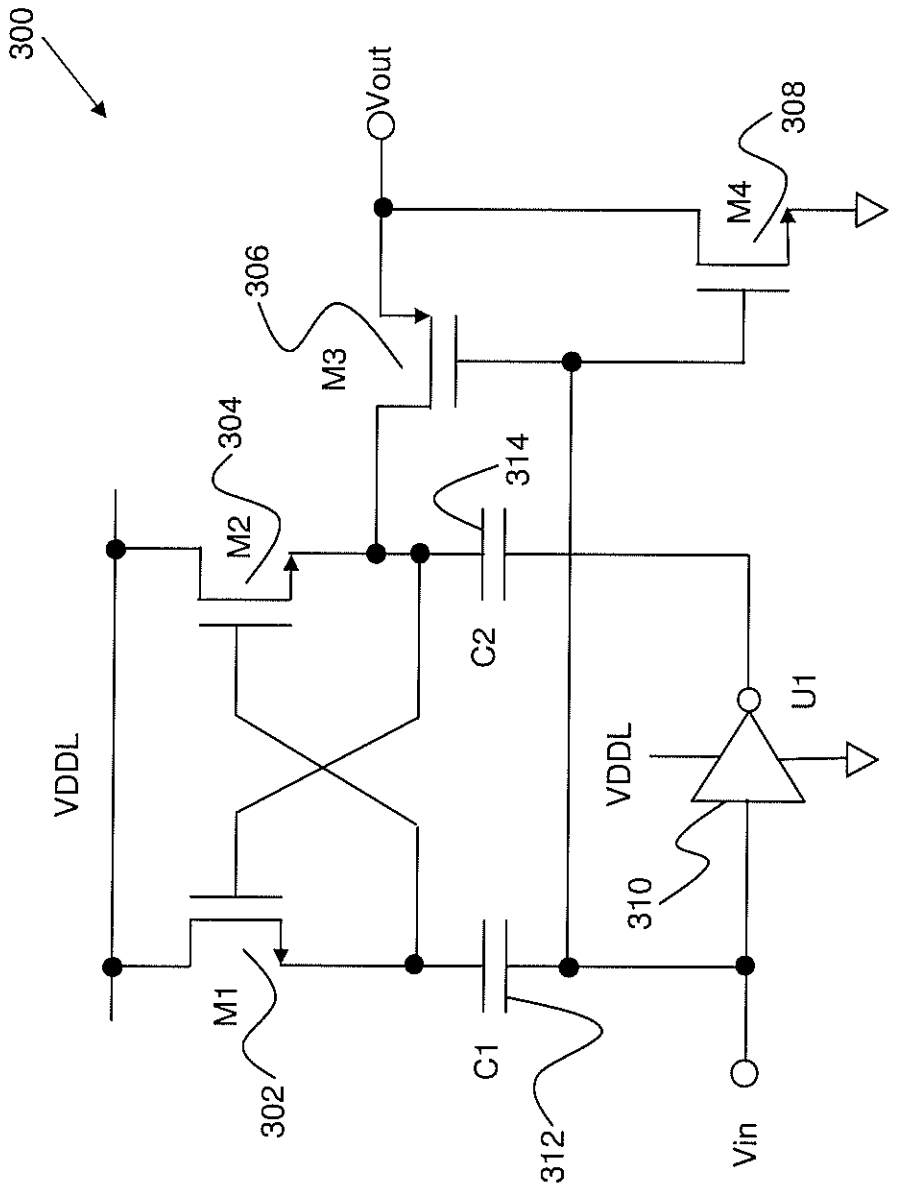
300
Vout
308
M4
306
M3
304
M2
314
C2
VDDL
U1
VDDL
310
M1
302
C1
312
Vin

Figure 3

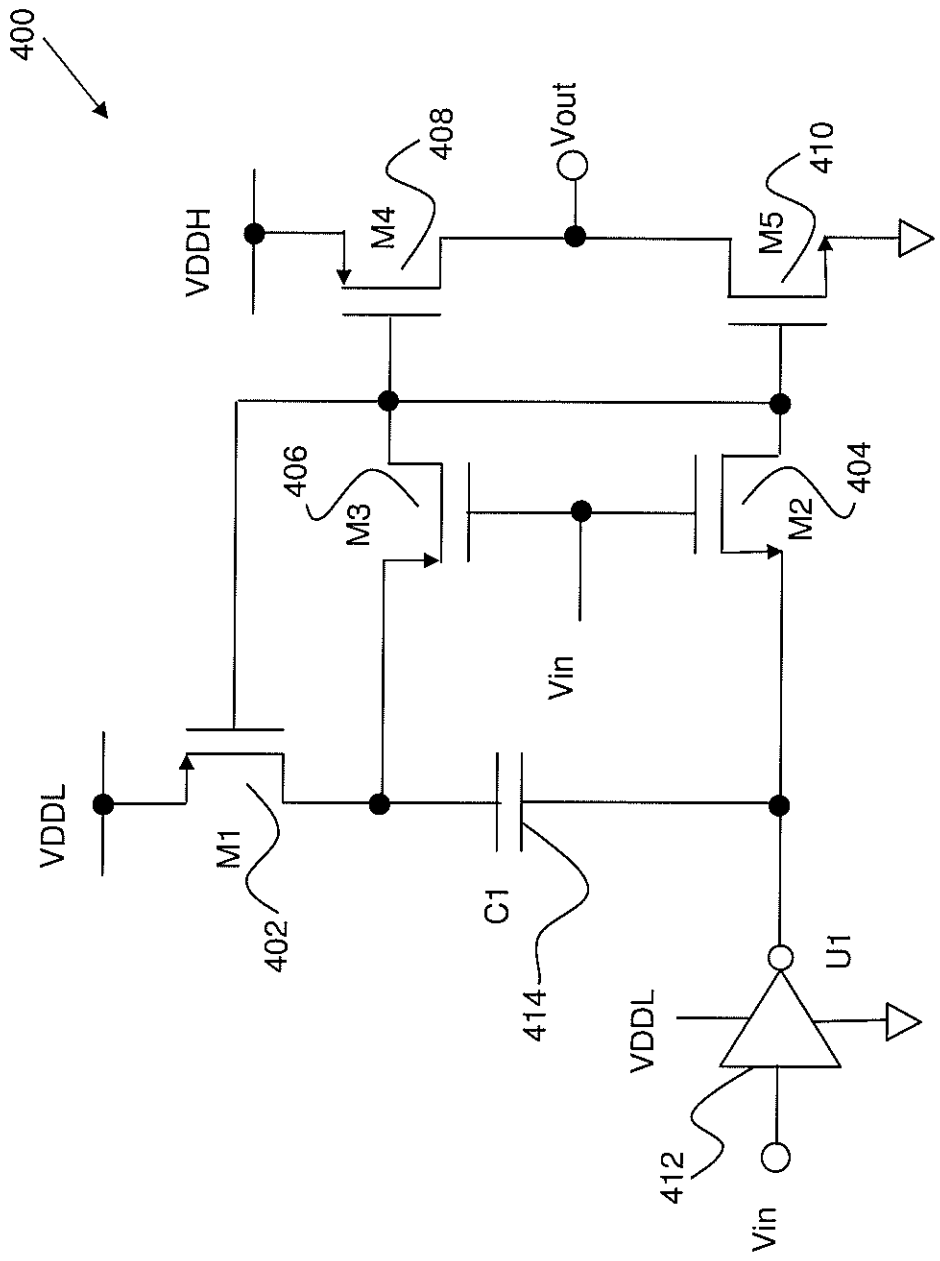
400
VDDH
M4
408
Vout
M5
410
406
M3
M2
404
Vin
VDDL
M1
402
C1
414
U1
VDDL
412
Vin

Figure 4

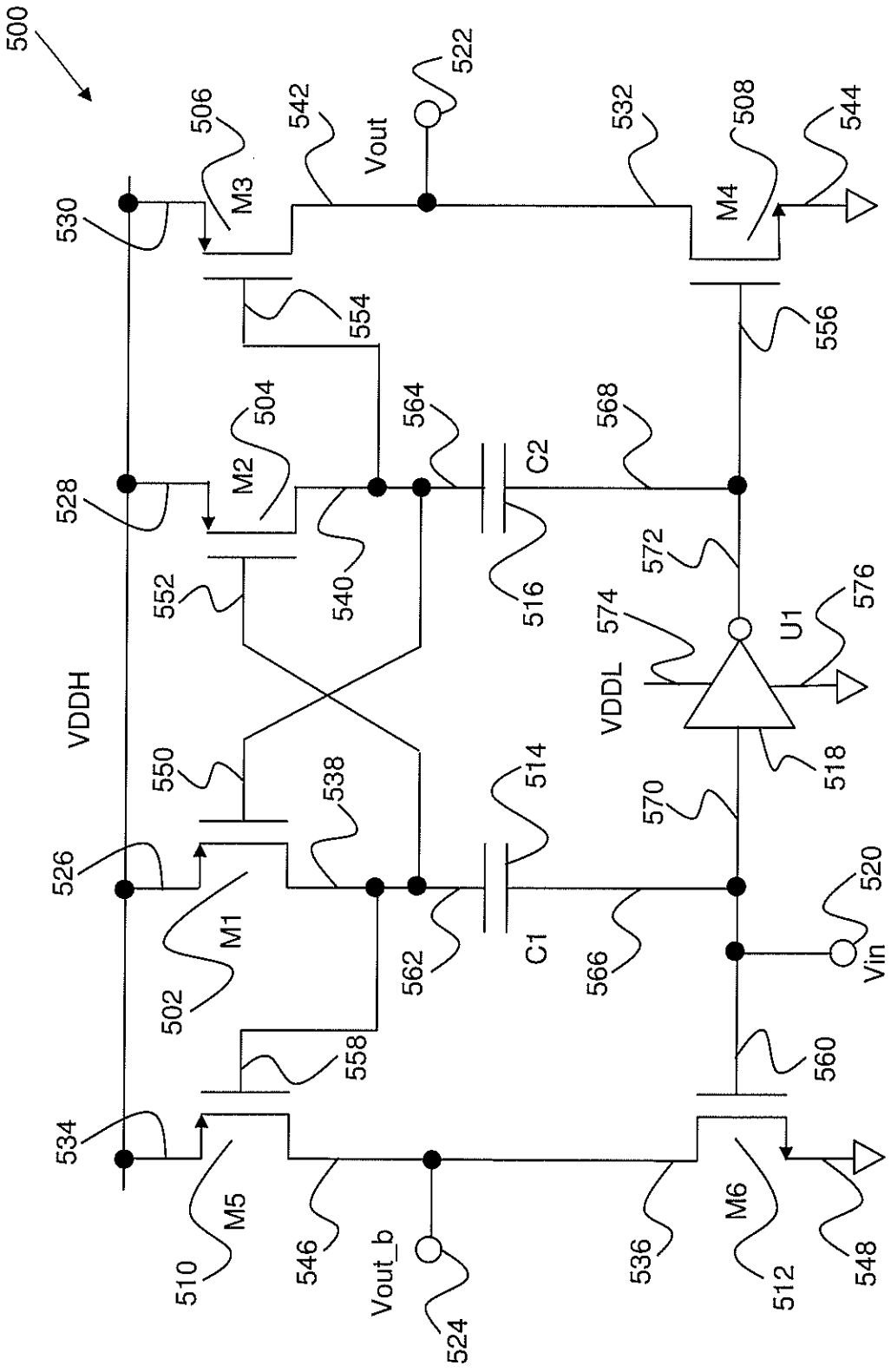
500
506
M3
542
Vout
522
532
508
M4
544
530
554
556
504
M2
564
568
C2
528
552
540
516
572
576
U1
574
VDDL
VDDH
550
538
514
518
570
526
M1
502
562
C1
566
520
Vin
558
560
534
M5
546
Vout_b
536
M6
510
524
512
548

Figure 5

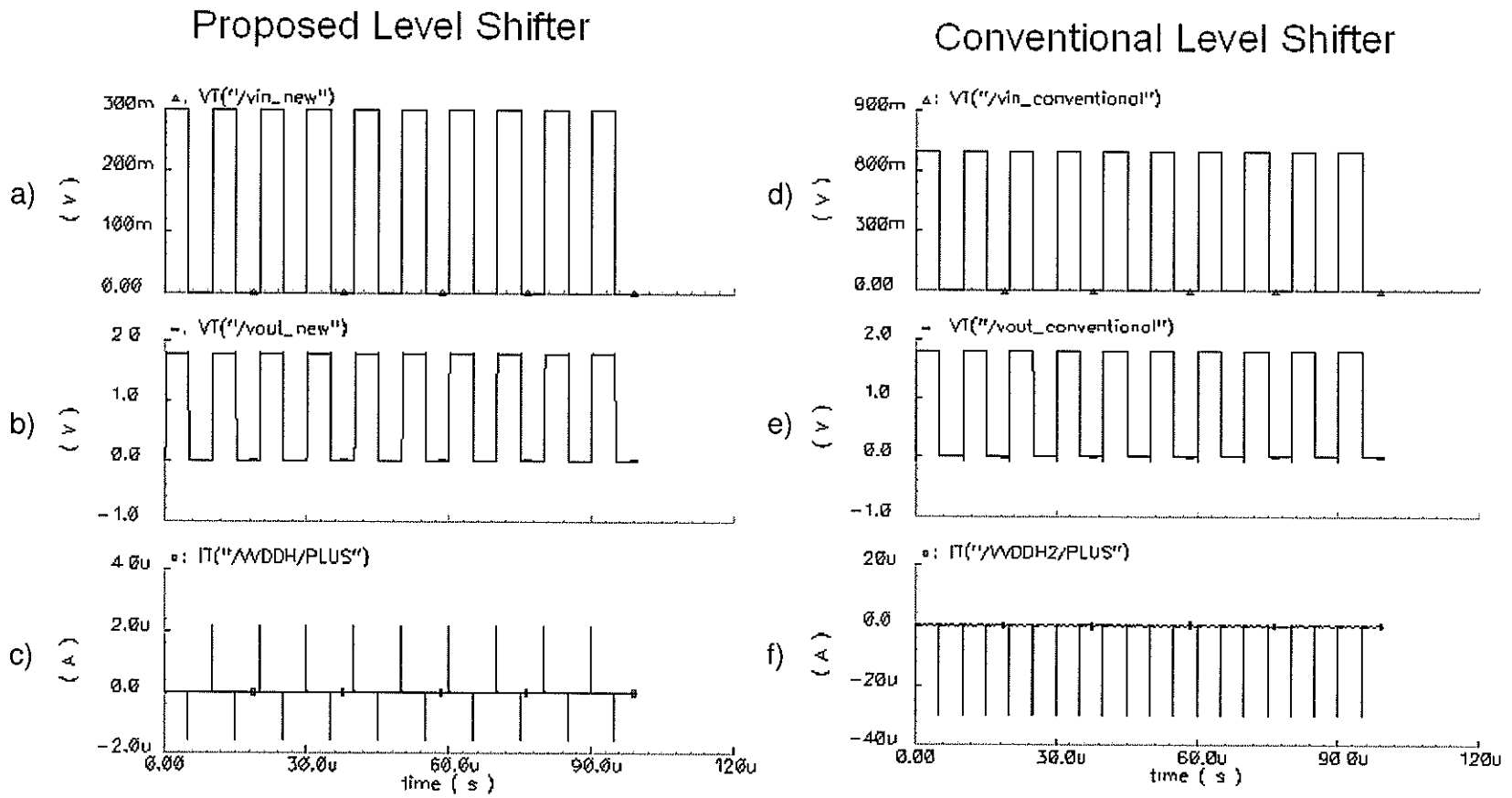
Proposed Level Shifter
Conventional Level Shifter
a)
b)
c)
d)
e)
f)
VT("/vin_new")
VT("/vout_new")
IT("/VDDH/PLUS")
VT("/vin_conventional")
VT("/vout_conventional")
IT("/VDDH2/PLUS")
300m
200m
100m
0.00
2.0
1.0
0.0
-1.0
4.0u
2.0u
0.0
-2.0u
900m
800m
300m
20u
0.0
-20u
-40u
0.00
30.0u
60.0u
90.0u
120u
time (s)
(V)
(A)

Figure 6