(12) INTERNATIONAL APPLICATION PUBLISHED UNDER THE PATENT COOPERATION TREATY (PCT)

(19) World Intellectual Property Organization
International Bureau

(43) International Publication Date
14 July 2011 (14.07.2011)

PCT

(10) International Publication Number
WO 2011/085336 A1

(51) International Patent Classification:
B41N 10/04 (2006.01)

(21) International Application Number:
PCT/US2011/020723

(22) International Filing Date:
11 January 2011 (11.01.2011)

(25) Filing Language: English

(26) Publication Language: English

(30) Priority Data:
61/293,825 11 January 2010 (11.01.2010) US

(71) Applicant *(for all designated States except US)*: **LUBRIZOL ADVANCED MATERIALS, INC.** [US/US]; 9911 Brecksville Road, Cleveland, Ohio 44141-3247 (US).

(72) Inventors; and
(75) Inventors/Applicants *(for US only)*: **MELTZER, Donald A.** [US/US]; 560 Lake of the Woods Blvd., Akron, Ohio 44333 (US). **VONTORCIK, JR., Joseph J.** [US/US]; 1468 Golden Lane, Broadview Heights, Ohio 44147 (US).

(74) Agents: **DUNLAP, Thoburn T.** et al.; The Lubrizol Corporation, Mail Drop 022B, Legal Department, 29400 Lakeland Blvd., Wickliffe, Ohio 44092-2298 (US).

(81) Designated States *(unless otherwise indicated, for every kind of national protection available)*: AE, AG, AL, AM, AO, AT, AU, AZ, BA, BB, BG, BH, BR, BW, BY, BZ, CA, CH, CL, CN, CO, CR, CU, CZ, DE, DK, DM, DO, DZ, EC, EE, EG, ES, FI, GB, GD, GE, GH, GM, GT, HN, HR, HU, ID, IL, IN, IS, JP, KE, KG, KM, KN, KP, KR, KZ, LA, LC, LK, LR, LS, LT, LU, LY, MA, MD, ME, MG, MK, MN, MW, MX, MY, MZ, NA, NG, NI, NO, NZ, OM, PE, PG, PH, PL, PT, RO, RS, RU, SC, SD, SE, SG, SK, SL, SM, ST, SV, SY, TH, TJ, TM, TN, TR, TT, TZ, UA, UG, US, UZ, VC, VN, ZA, ZM, ZW.

(84) Designated States *(unless otherwise indicated, for every kind of regional protection available)*: ARIPO (BW, GH, GM, KE, LR, LS, MW, MZ, NA, SD, SL, SZ, TZ, UG, ZM, ZW), Eurasian (AM, AZ, BY, KG, KZ, MD, RU, TJ, TM), European (AL, AT, BE, BG, CH, CY, CZ, DE, DK, EE, ES, FI, FR, GB, GR, HR, HU, IE, IS, IT, LT, LU, LV, MC, MK, MT, NL, NO, PL, PT, RO, RS, SE, SI, SK, SM, TR), OAPI (BF, BJ, CF, CG, CI, CM, GA, GN, GQ, GW, ML, MR, NE, SN, TD, TG).

Declarations under Rule 4.17:

— *as to applicant's entitlement to apply for and be granted a patent (Rule 4.17(ii))*

Published:

— *with international search report (Art. 21(3))*

[Continued on next page]

(54) **Title**: THERMOPLASTIC POLYURETHANE FOR PRINTING BLANKETS

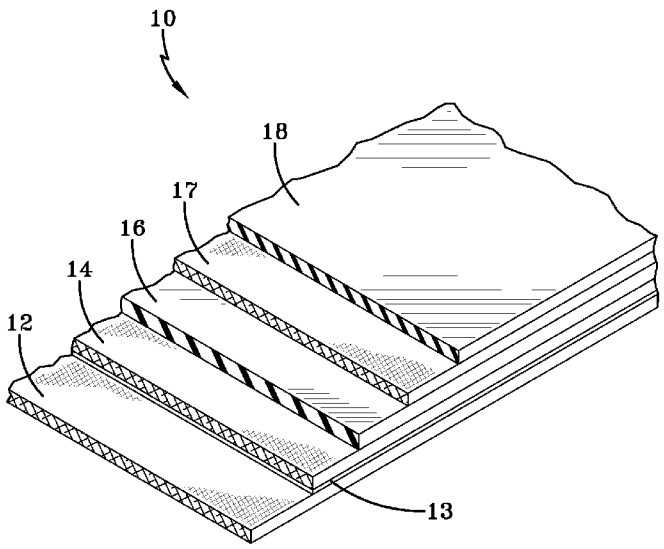

FIG–1

(57) **Abstract**: The present invention provides an offset printing blanket (10) or sleeve including one or more layers that are made with a soft thermoplastic polyurethane composition that provides excellent compression set and excellent resistance to apolar solvents, such as naphthenic mineral spirits. The subject invention more specifically reveals a printing blanket comprising: a base layer (12); a compressible layer (15), and a printing surface layer (18), wherein the compressible layer and/or the printing surface layer comprises a thermoplastic polyurethane composition, wherein the thermoplastic polyurethane composition made by reacting (a) at least one polyester polyol intermediate with (b) at least one diisocyanate and (c) at least one chain extender; wherein the polyester polyol intermediate comprises an intermediate derived from at least one dialkylene glycol and at least one dicarboxylic acid or an ester or anhydride thereof. It is particularly beneficial to utilize the thermoplastic polyurethane composition in the printing surface layer.

WO 2011/085336 A1

— *before the expiration of the time limit for amending the claims and to be republished in the event of receipt of amendments (Rule 48.2(h))*