FIG.1

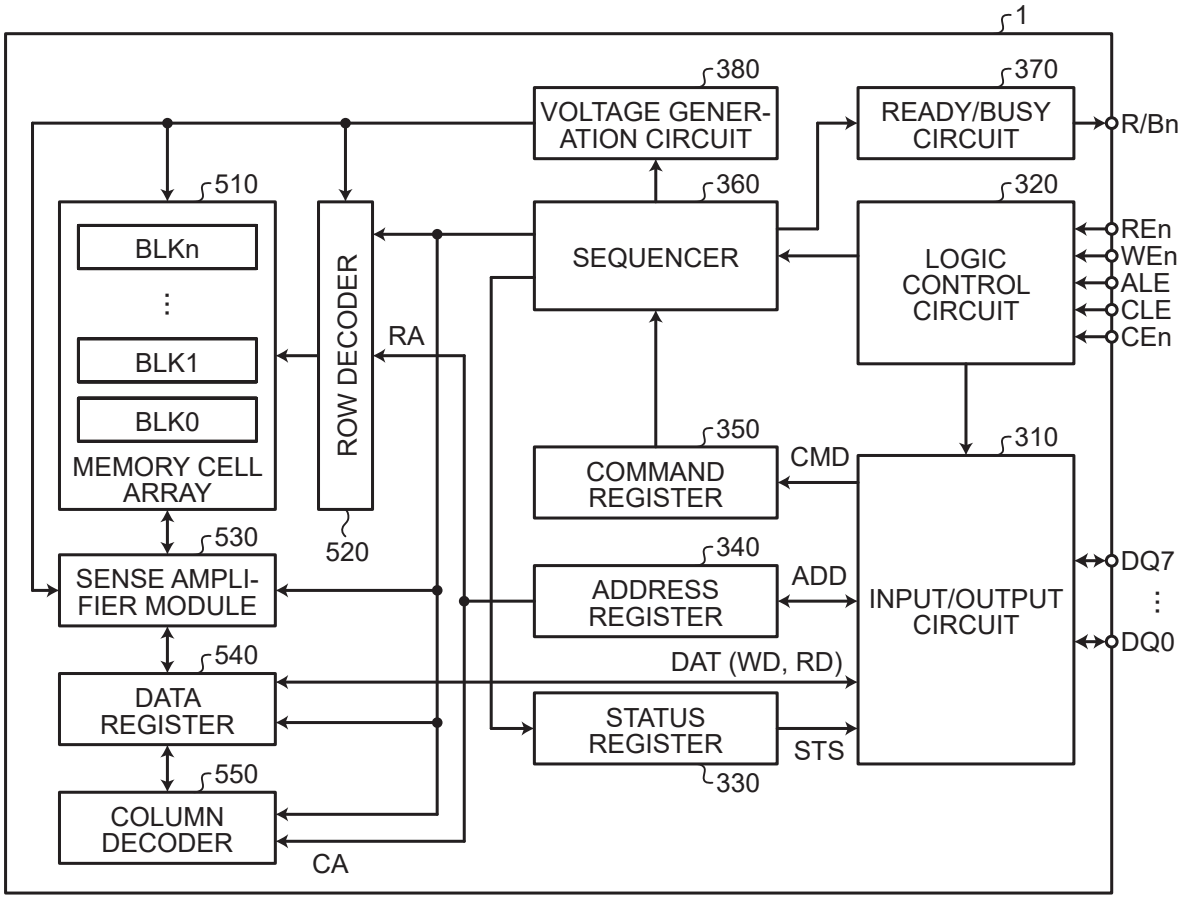
1
380
VOLTAGE GENER-
ATION CIRCUIT
370
READY/BUSY
CIRCUIT
R/Bn
510
BLKn
BLK1
BLK0
MEMORY CELL
ARRAY
ROW DECODER
520
RA
360
SEQUENCER
320
LOGIC
CONTROL
CIRCUIT
REn
WEn
ALE
CLE
CEn
350
COMMAND
REGISTER
CMD
310
340
ADDRESS
REGISTER
ADD
INPUT/OUTPUT
CIRCUIT
DQ7
DQ0
530
SENSE AMPLI-
FIER MODULE
540
DATA
REGISTER
DAT (WD, RD)
STATUS
REGISTER
STS
330
550
COLUMN
DECODER
CA

FIG.2

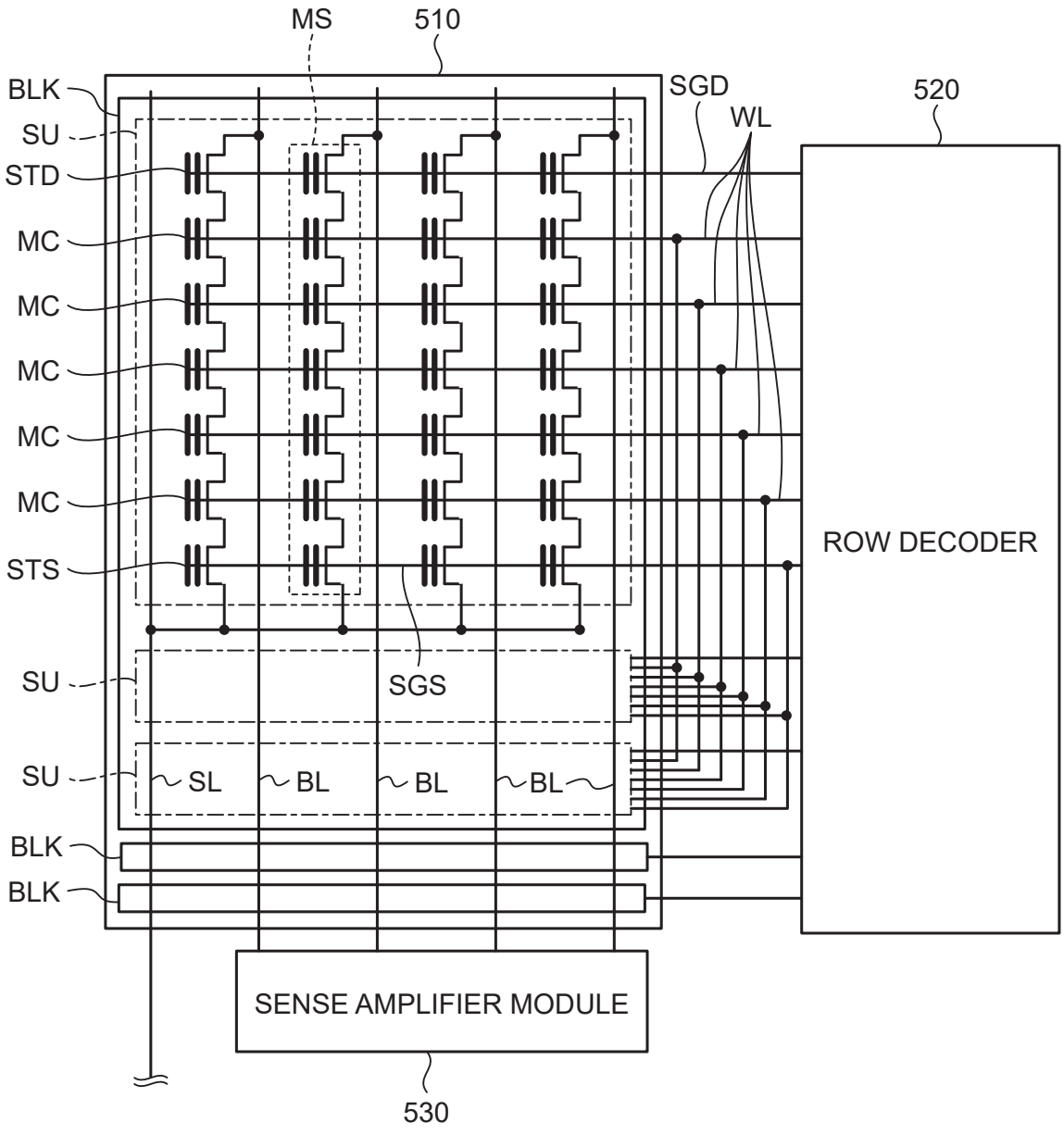
MS
510
BLK
SU
STD
MC
MC
MC
MC
MC
STS
SGD
WL
520
ROW DECODER
SGS
SU
SU
SL
BL
BL
BL
BLK
BLK
SENSE AMPLIFIER MODULE
530

FIG.3

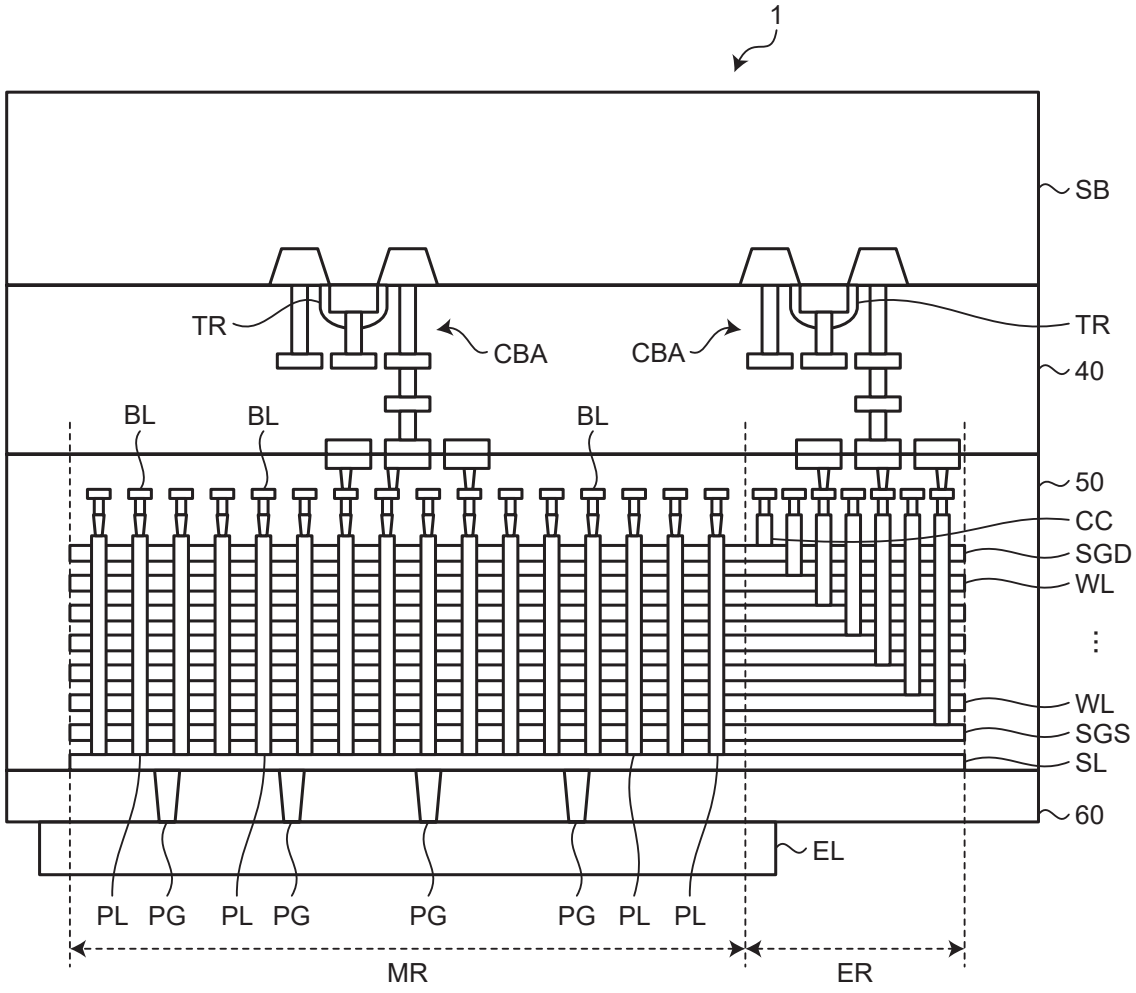
1
SB
TR
CBA
CBA
TR
40
BL
BL
BL
50
CC
SGD
WL
WL
SGS
SL
60
EL
PL
PG
PL
PG
PG
PG
PL
PL
MR
ER

FIG.4A

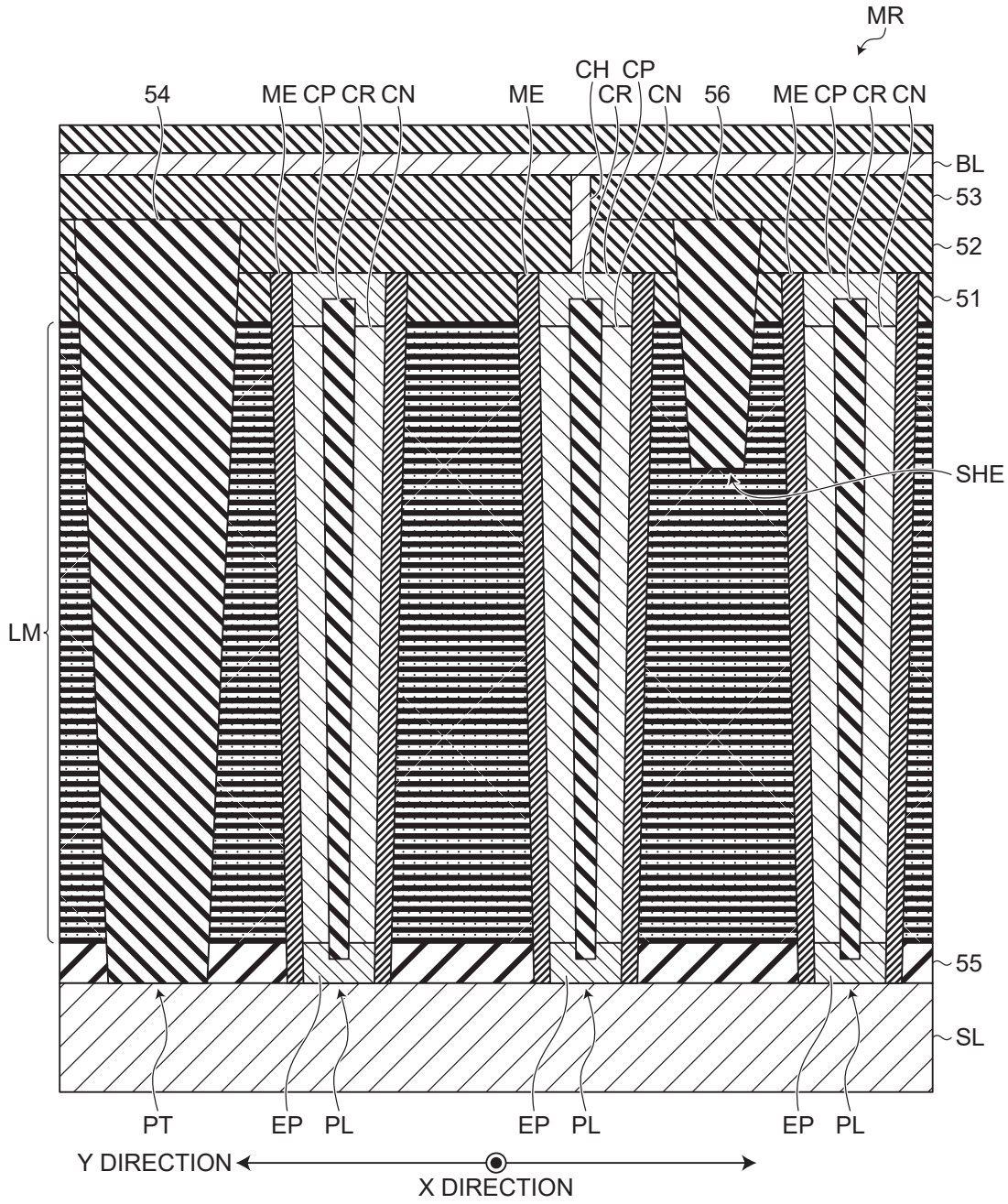

FIG.4B

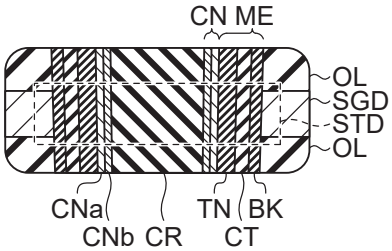

FIG.4C

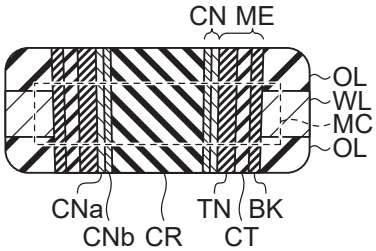

FIG.4D

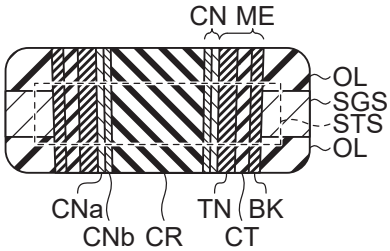

FIG.5A

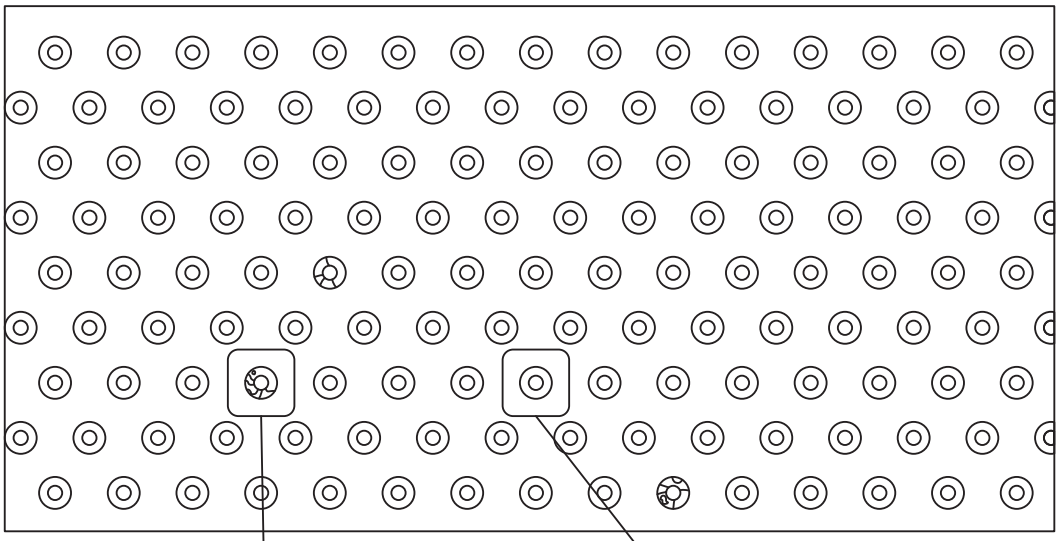

FIG.5B

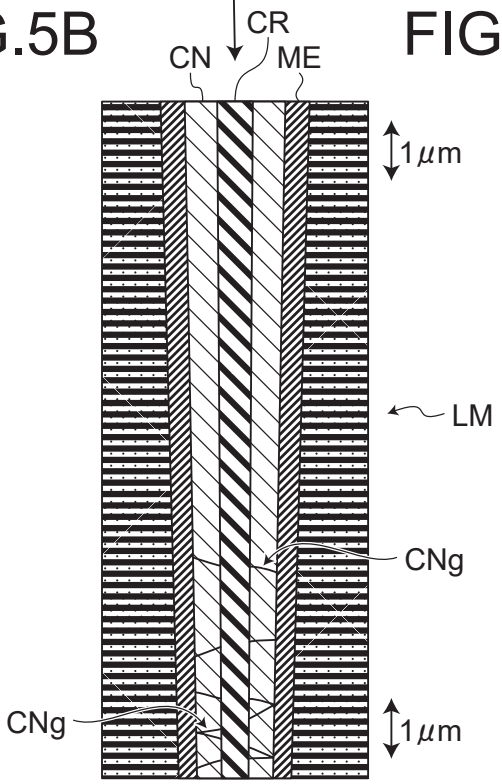

FIG.5C

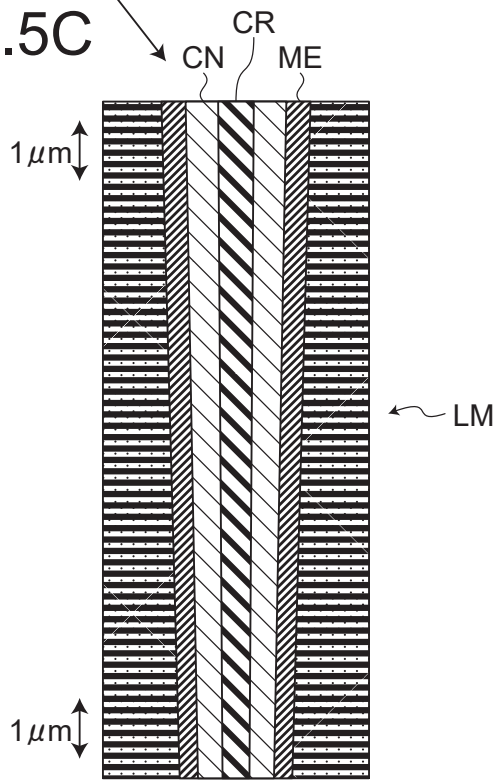

FIG.6A

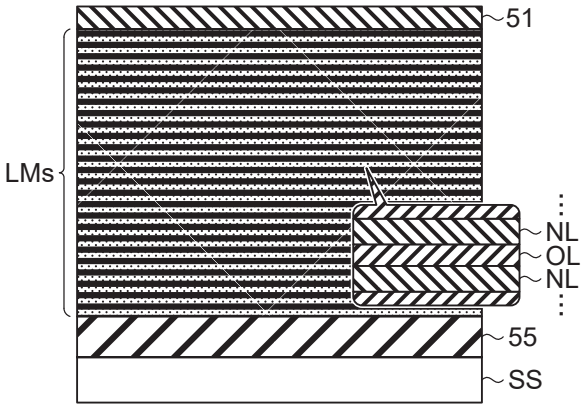

FIG.6C

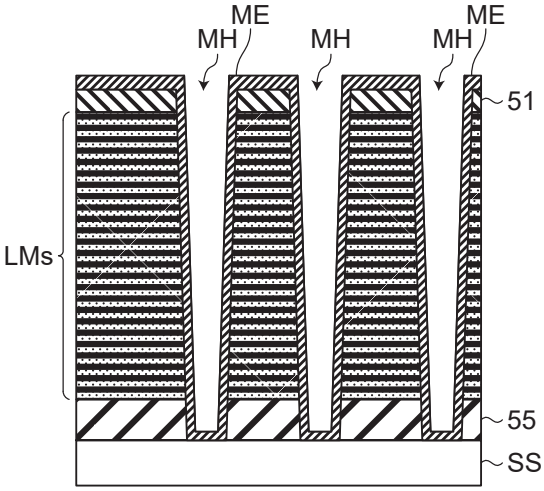

FIG.6B

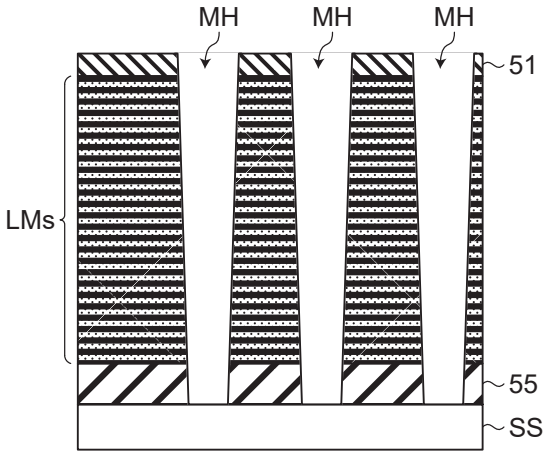

FIG.7A

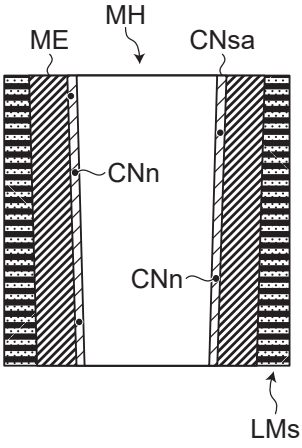

FIG.7B

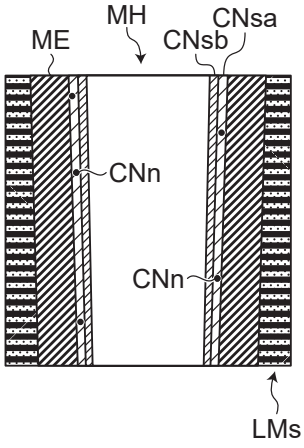

FIG.7C

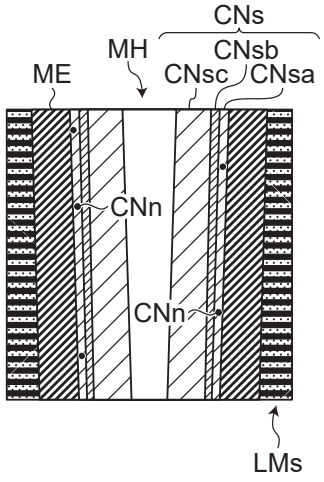

FIG.8A

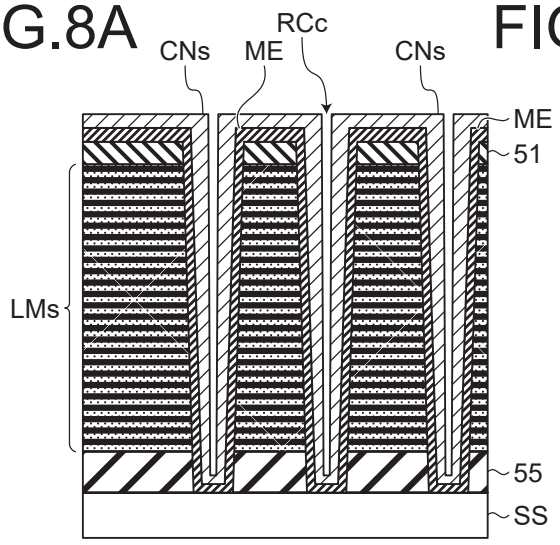

FIG.8D

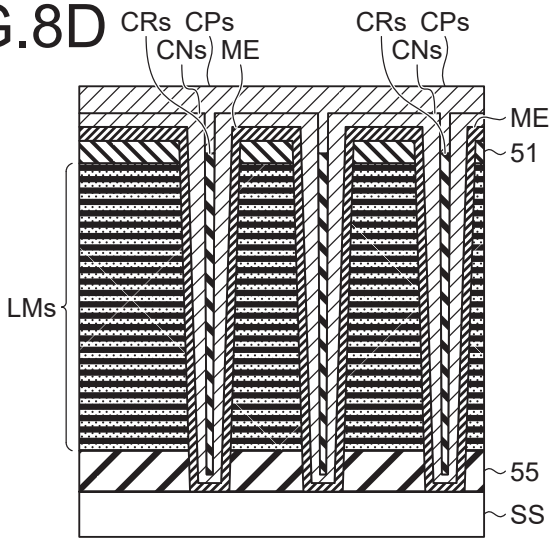

FIG.8B

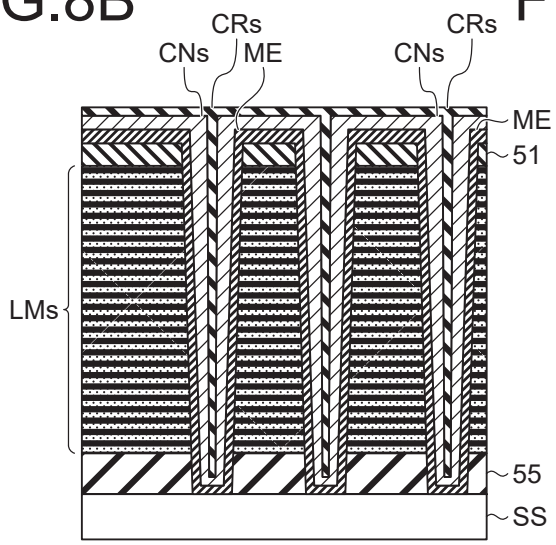

FIG.8E

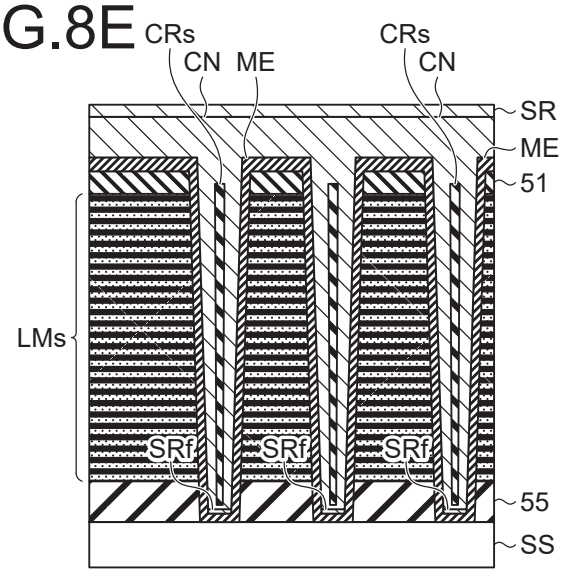

FIG.8C

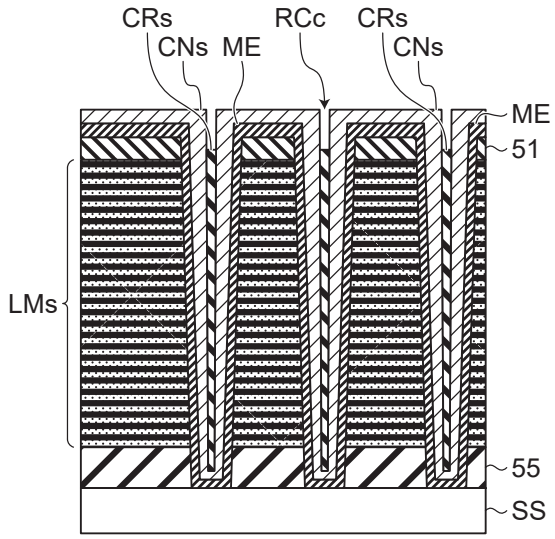

FIG.8F

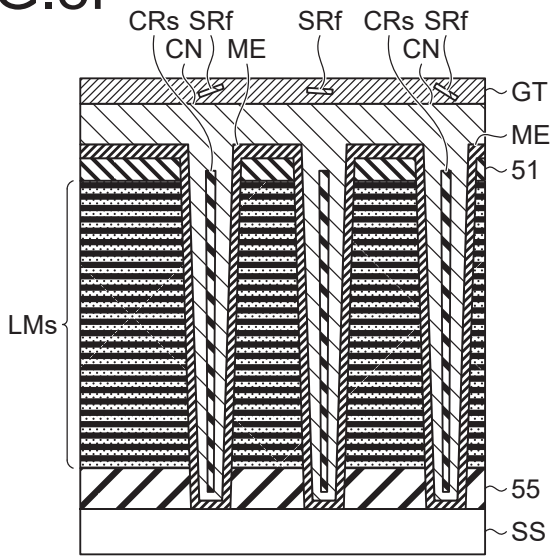

FIG.9A

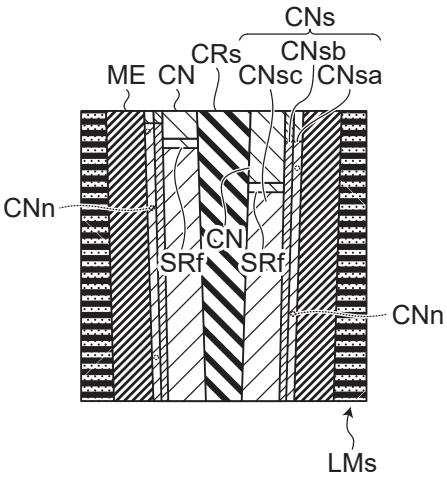

FIG.9B

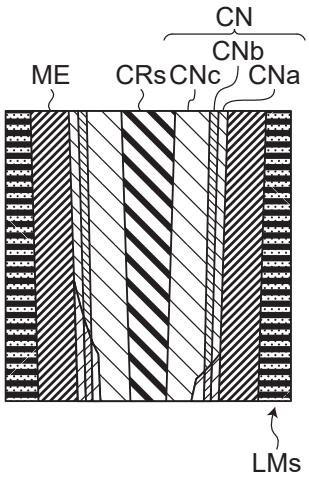

FIG.9C

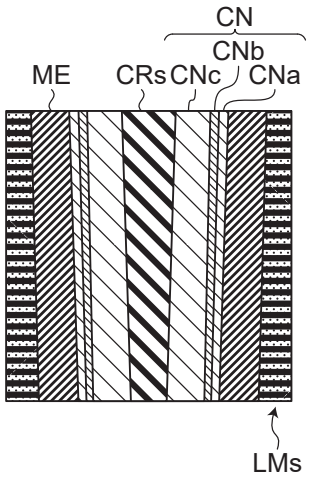

FIG.10A

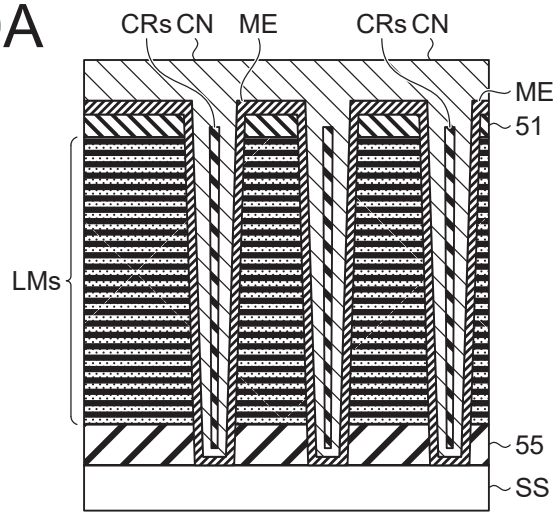

FIG.10B

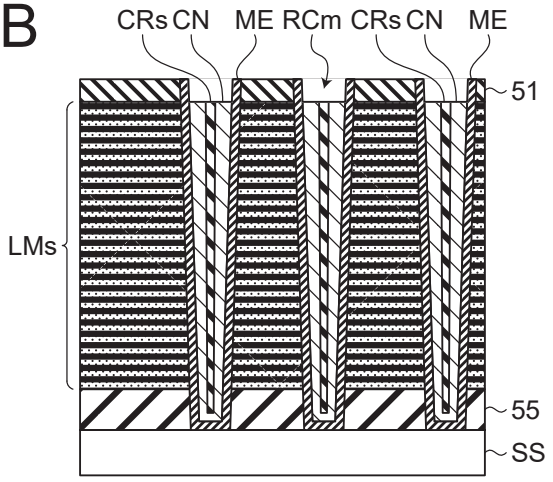

FIG.11A

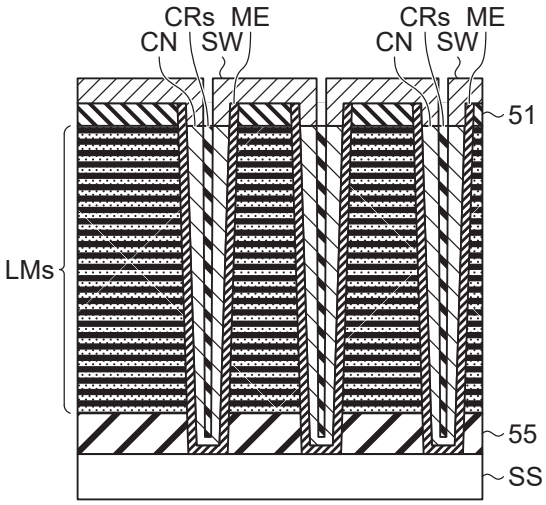

FIG.11B

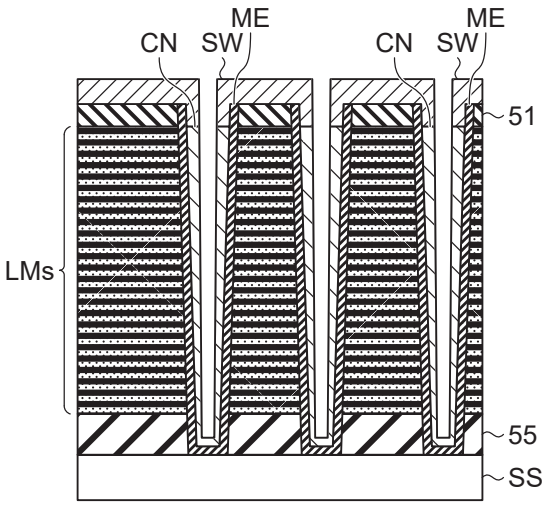

FIG.11C

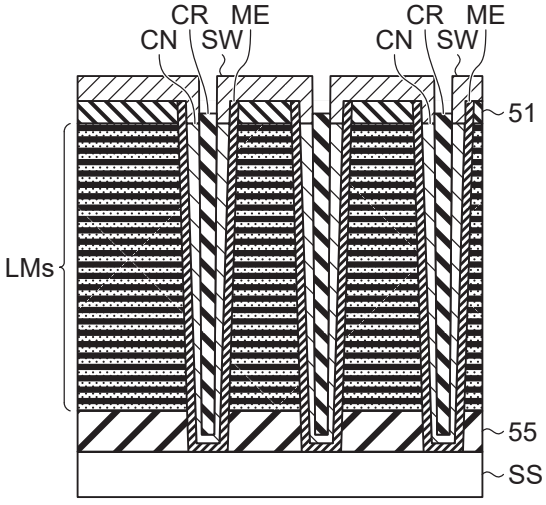

FIG.11D

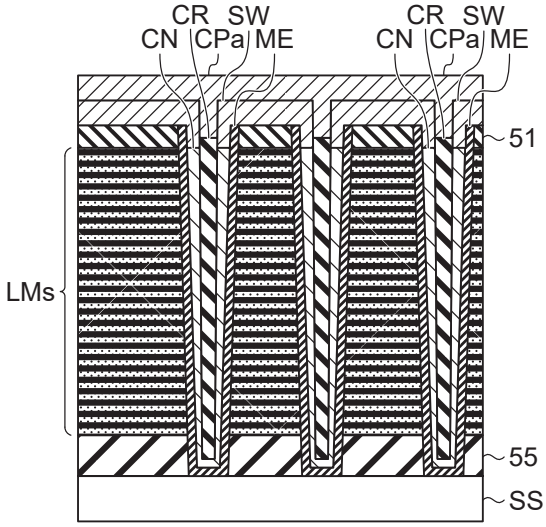

FIG.11E

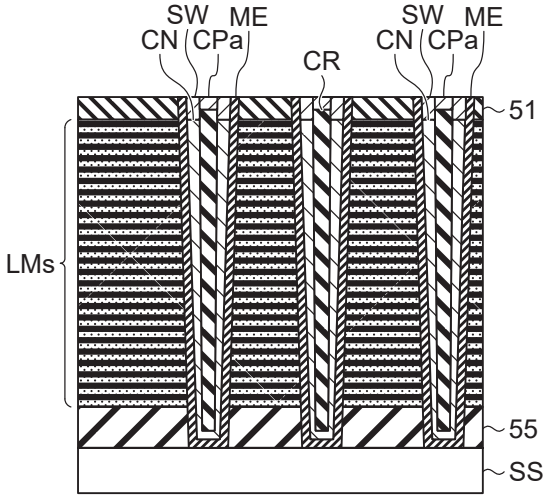

FIG.11F

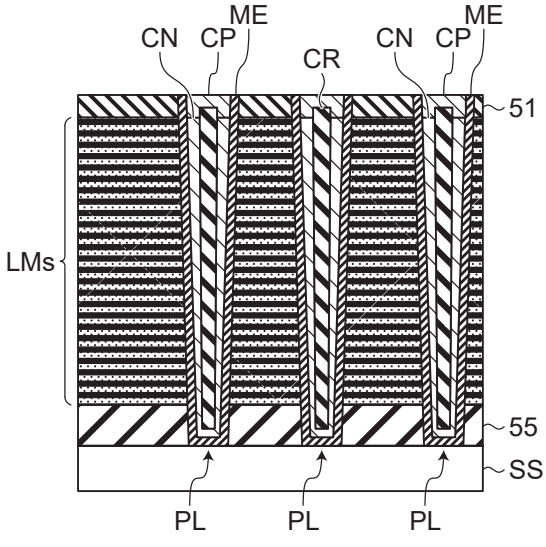

FIG.12A

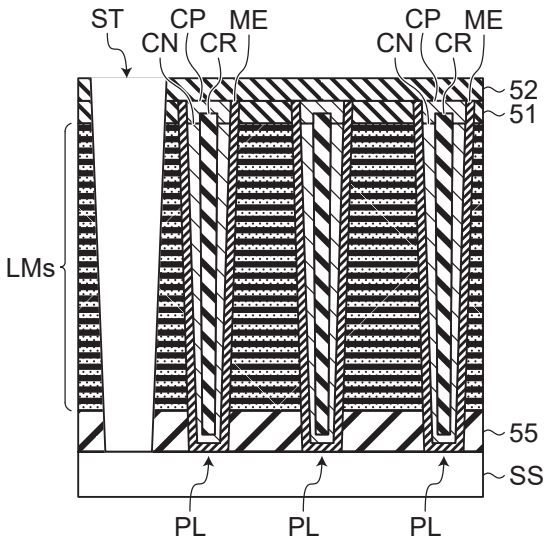

FIG.12D

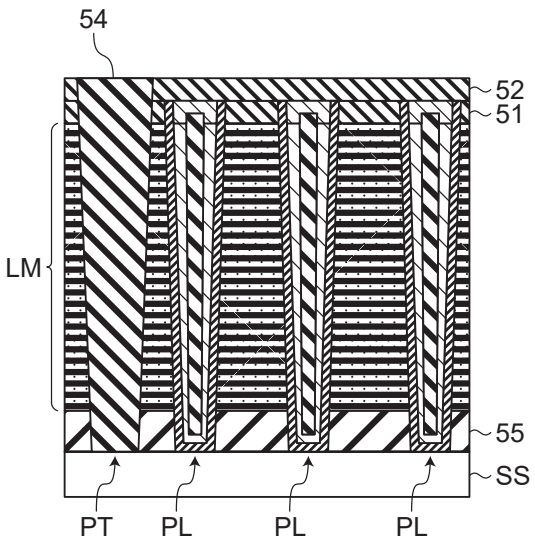

FIG.12B

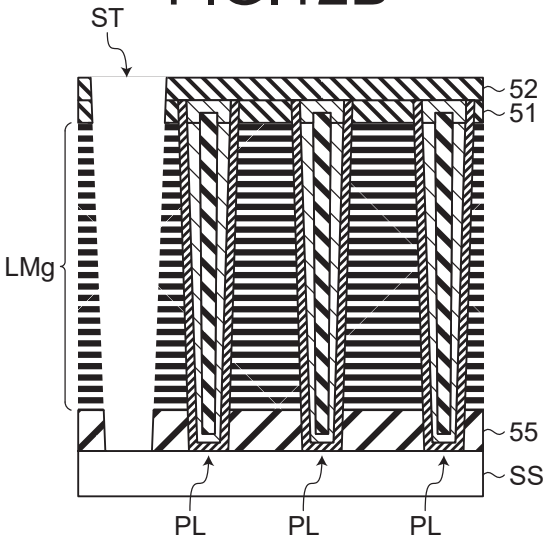

FIG.12E

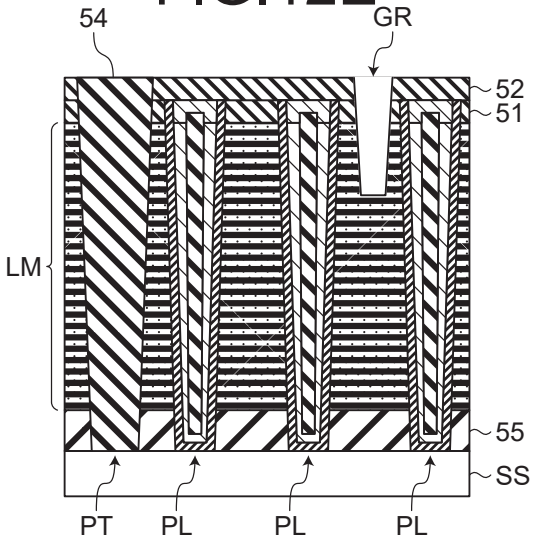

FIG.12C

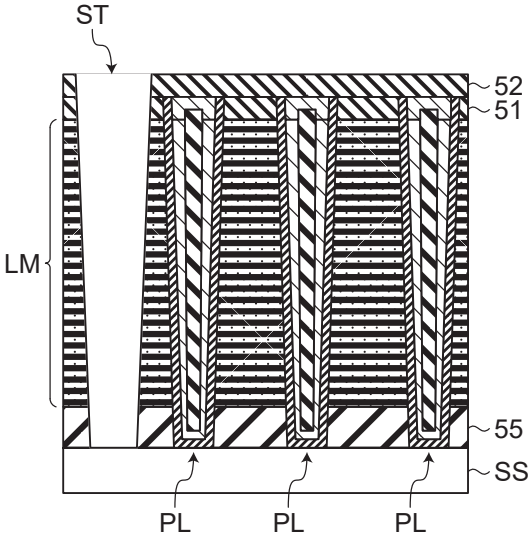

FIG.12F

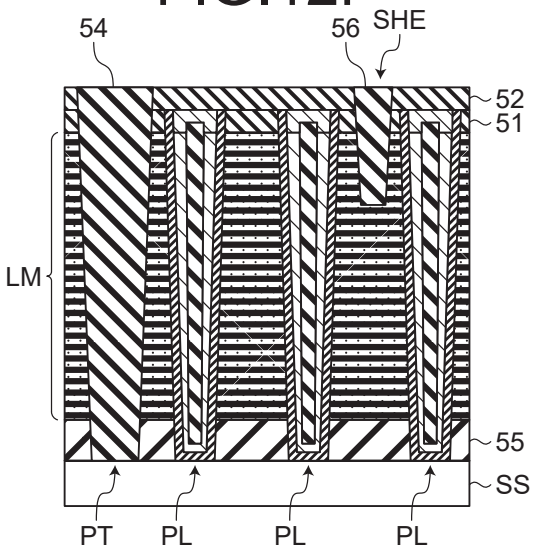

FIG.13A

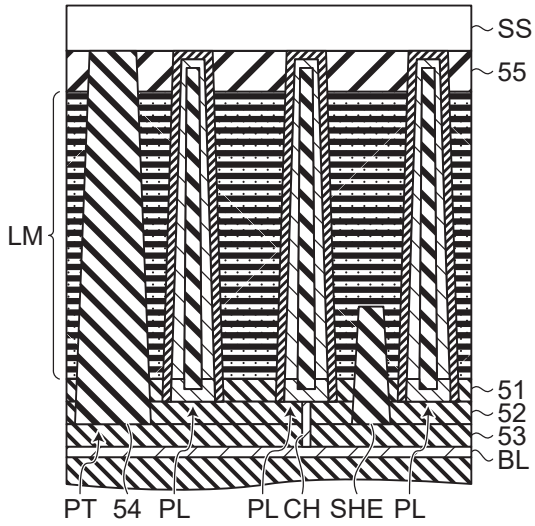

FIG.13B

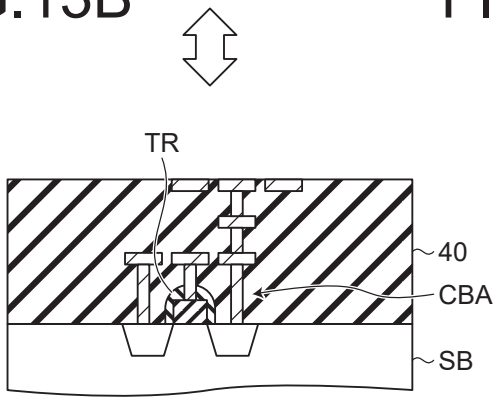

FIG.13C

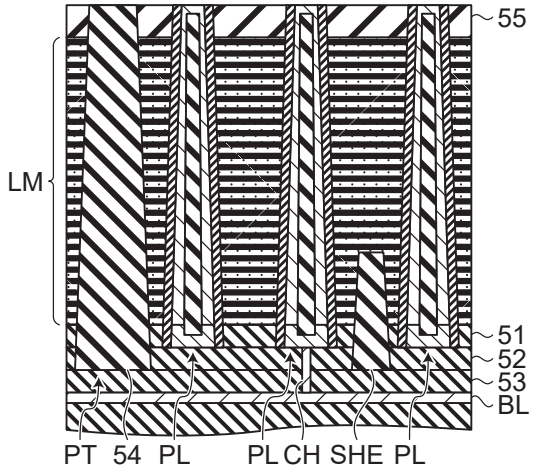

FIG.13D

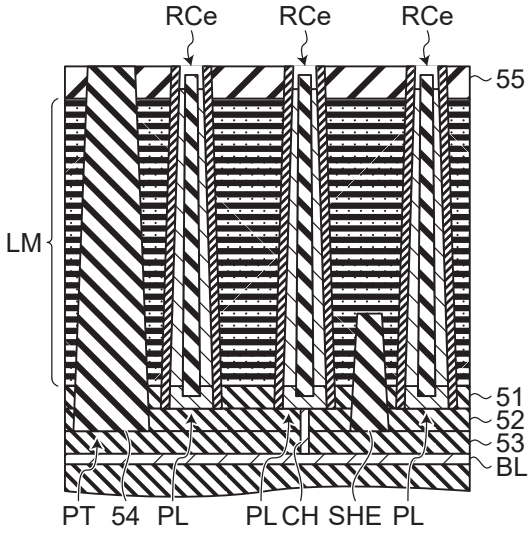

FIG.13E

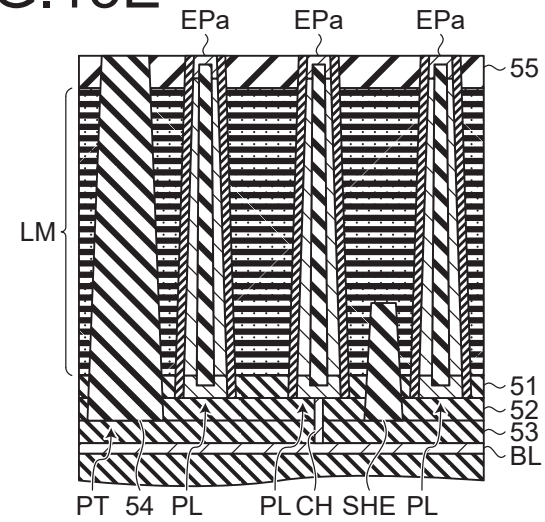

FIG.13F

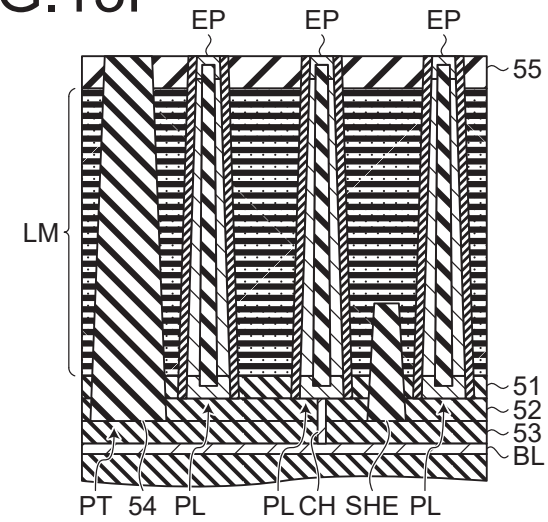

FIG.14A

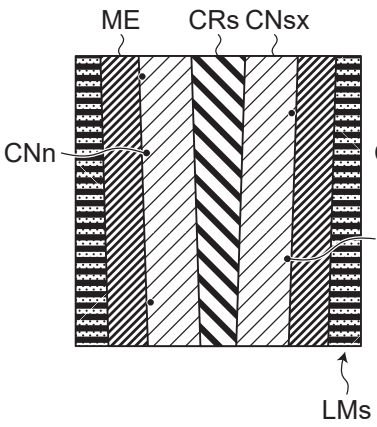

FIG.14B

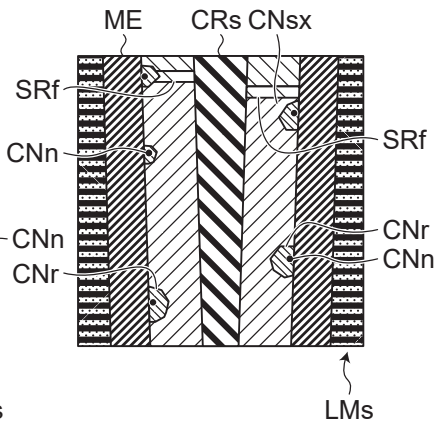

FIG.14C

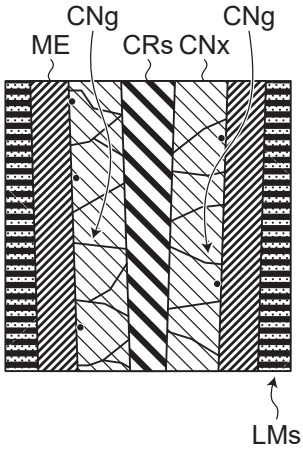

FIG.15

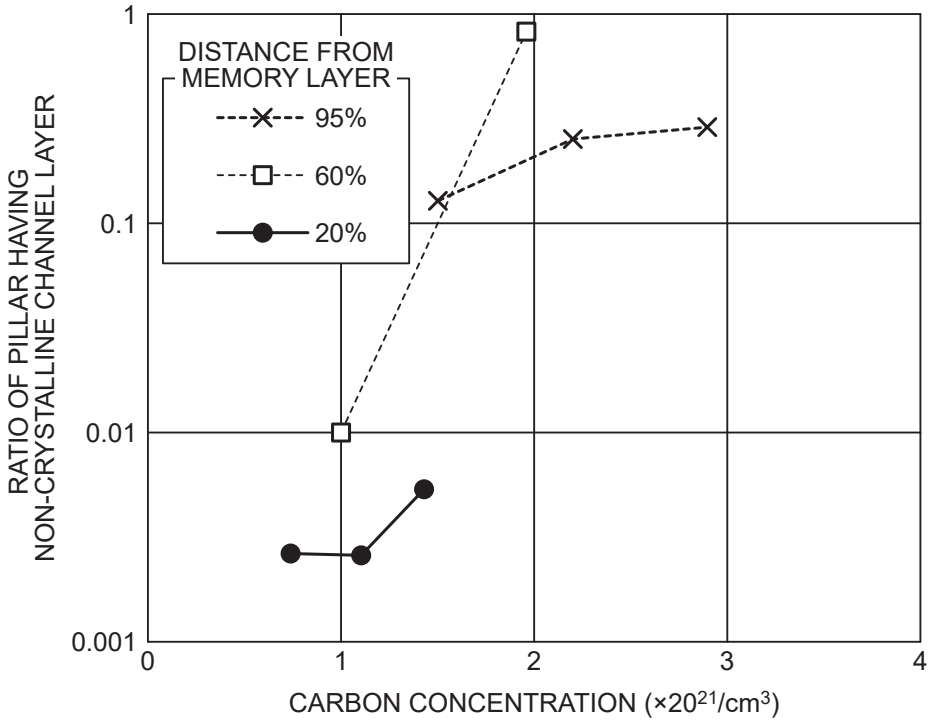

FIG.16A

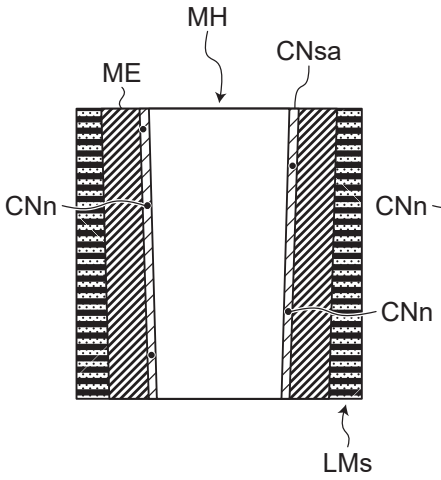

FIG.16B

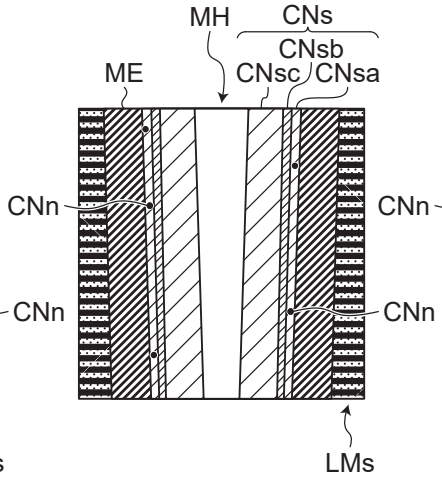

FIG.16C

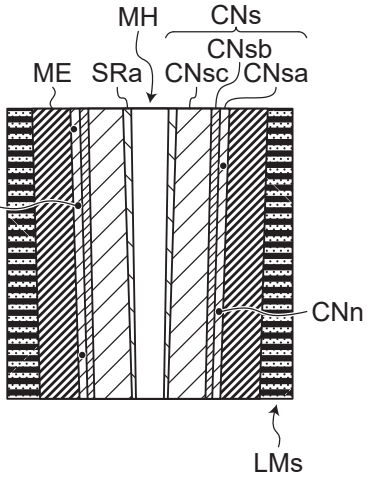

FIG.17A

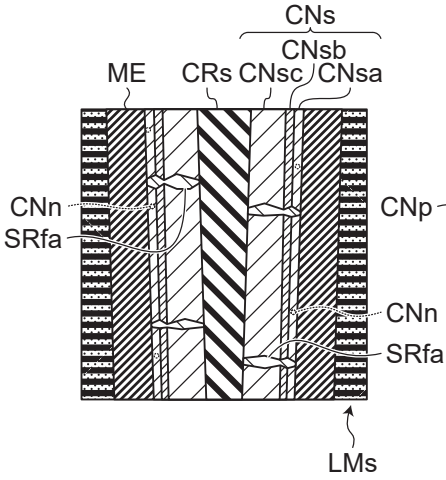

FIG.17B

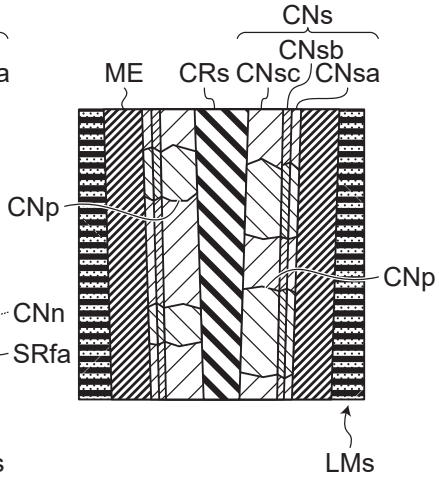

FIG.17C

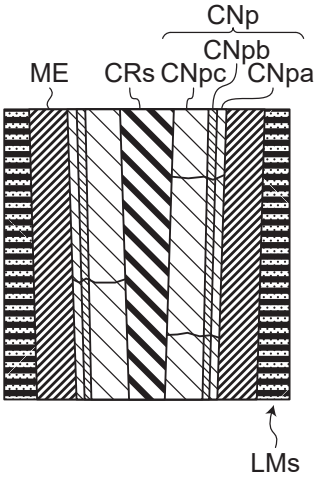

FIG.18

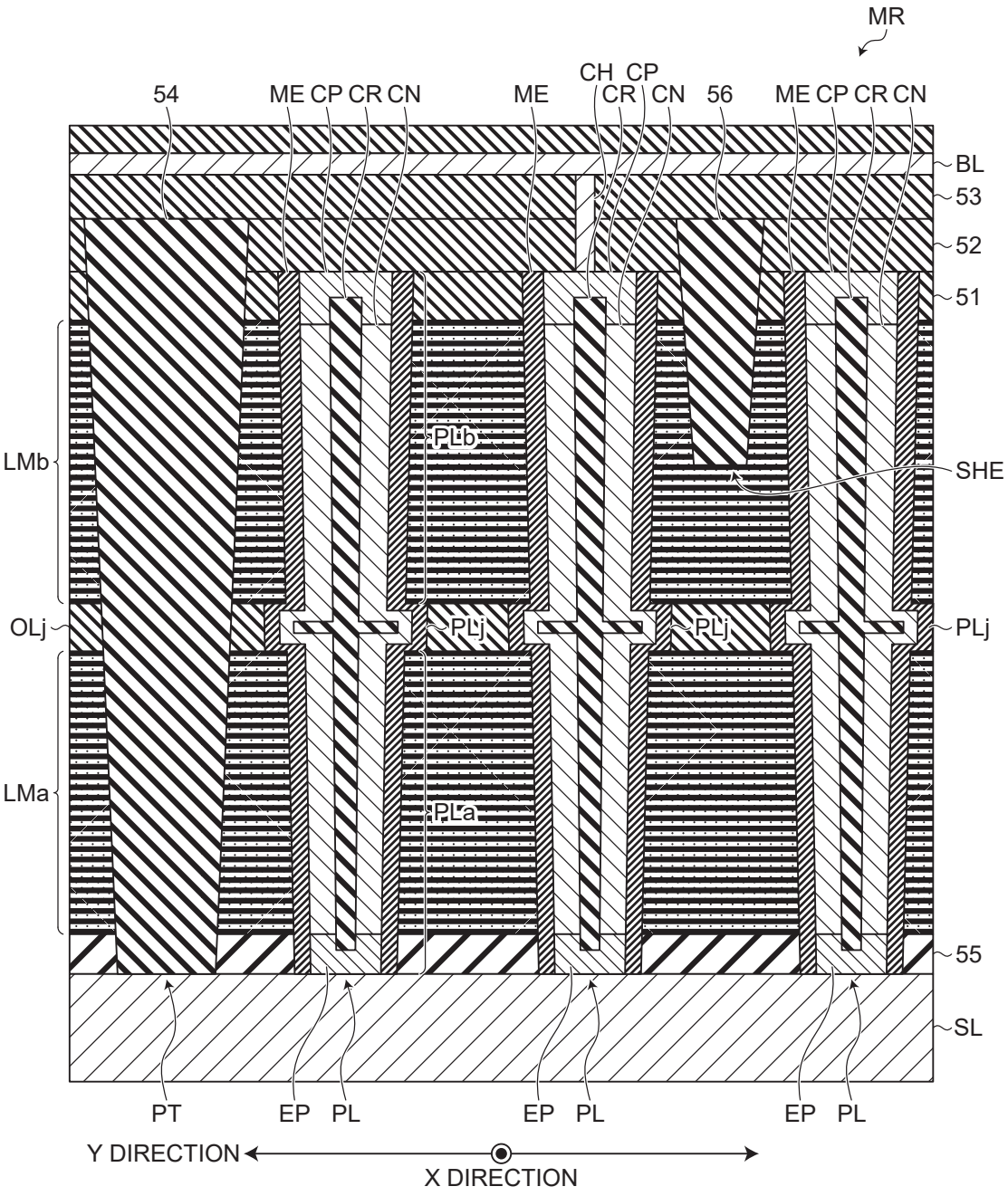
MR
54
ME CP CR CN
ME
CH CP
CR CN
56
ME CP CR CN
BL
53
52
51
LMb
PLb
SHE
OLj
PLj
PLj
PLj
LMa
PLa
55
SL
PT
EP PL
EP PL
EP PL
Y DIRECTION
X DIRECTION