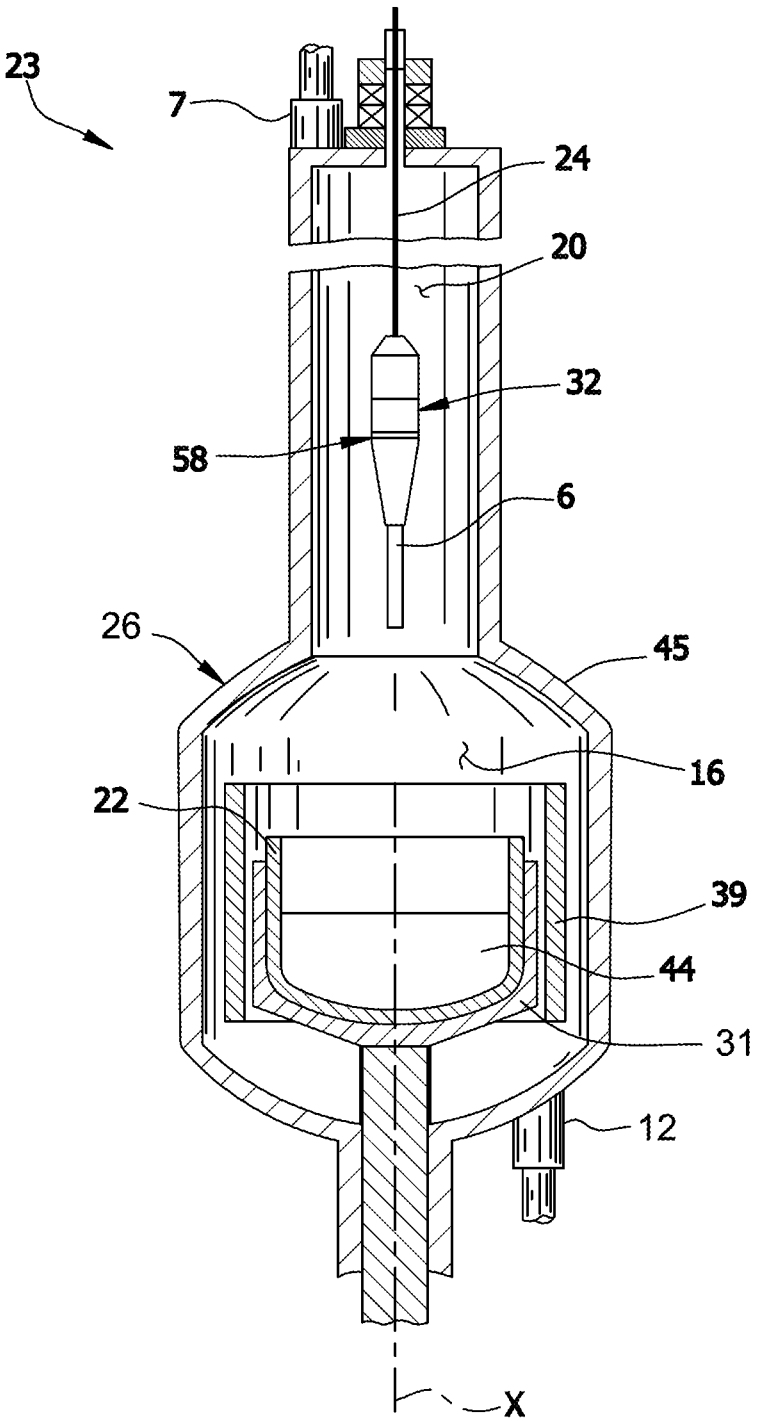

FIG. 1

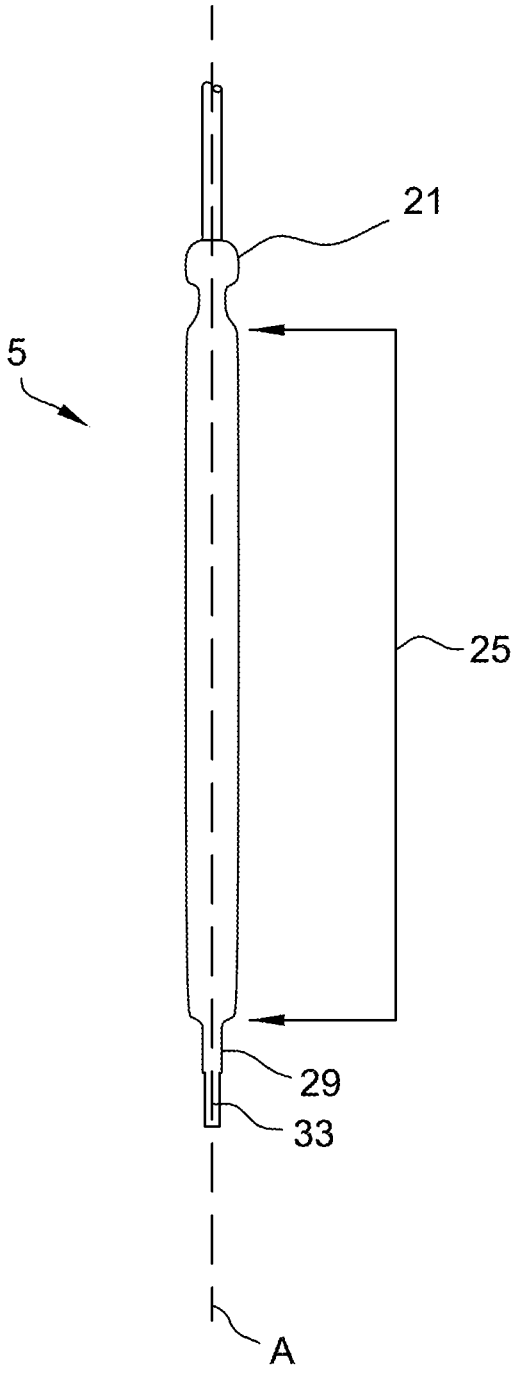

FIG. 2

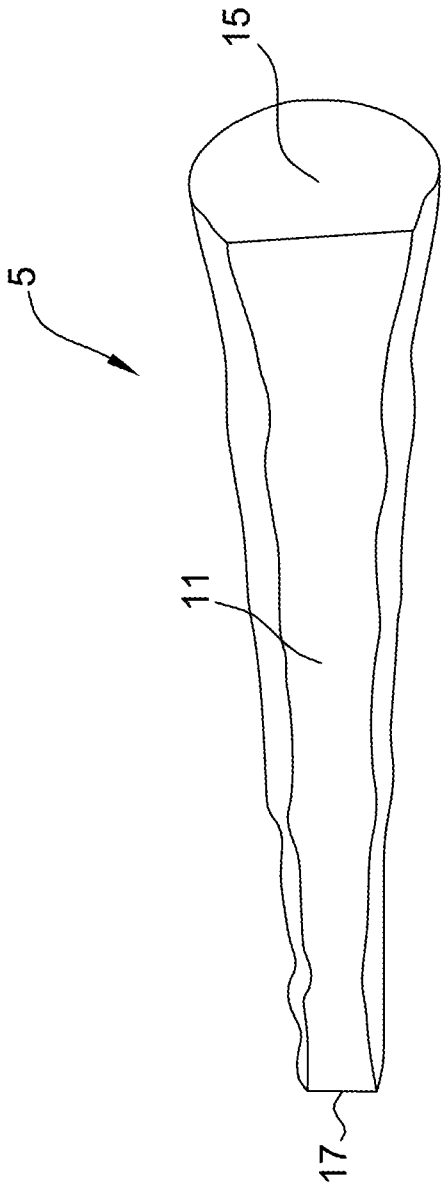

FIG. 3

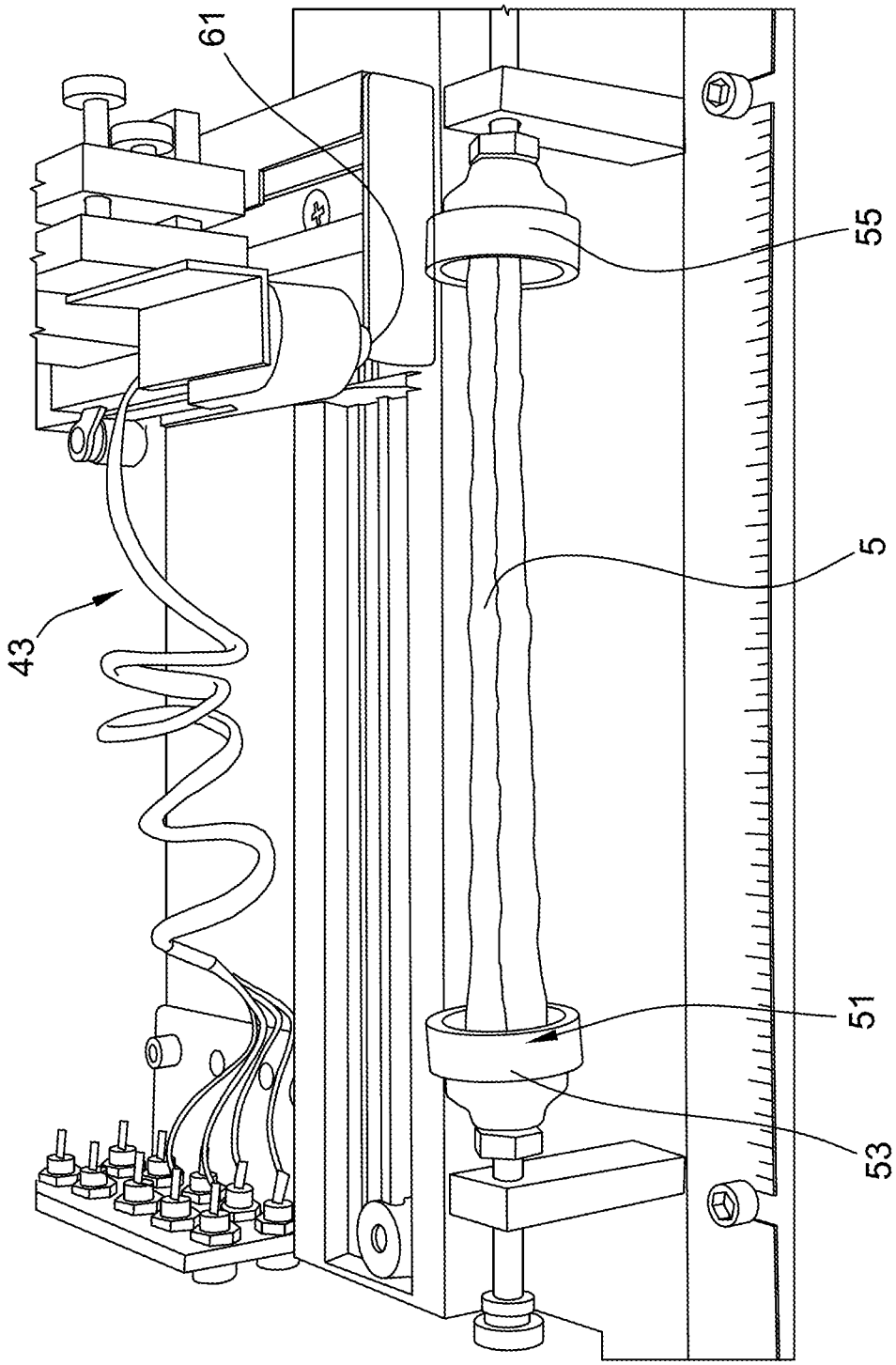

FIG. 4

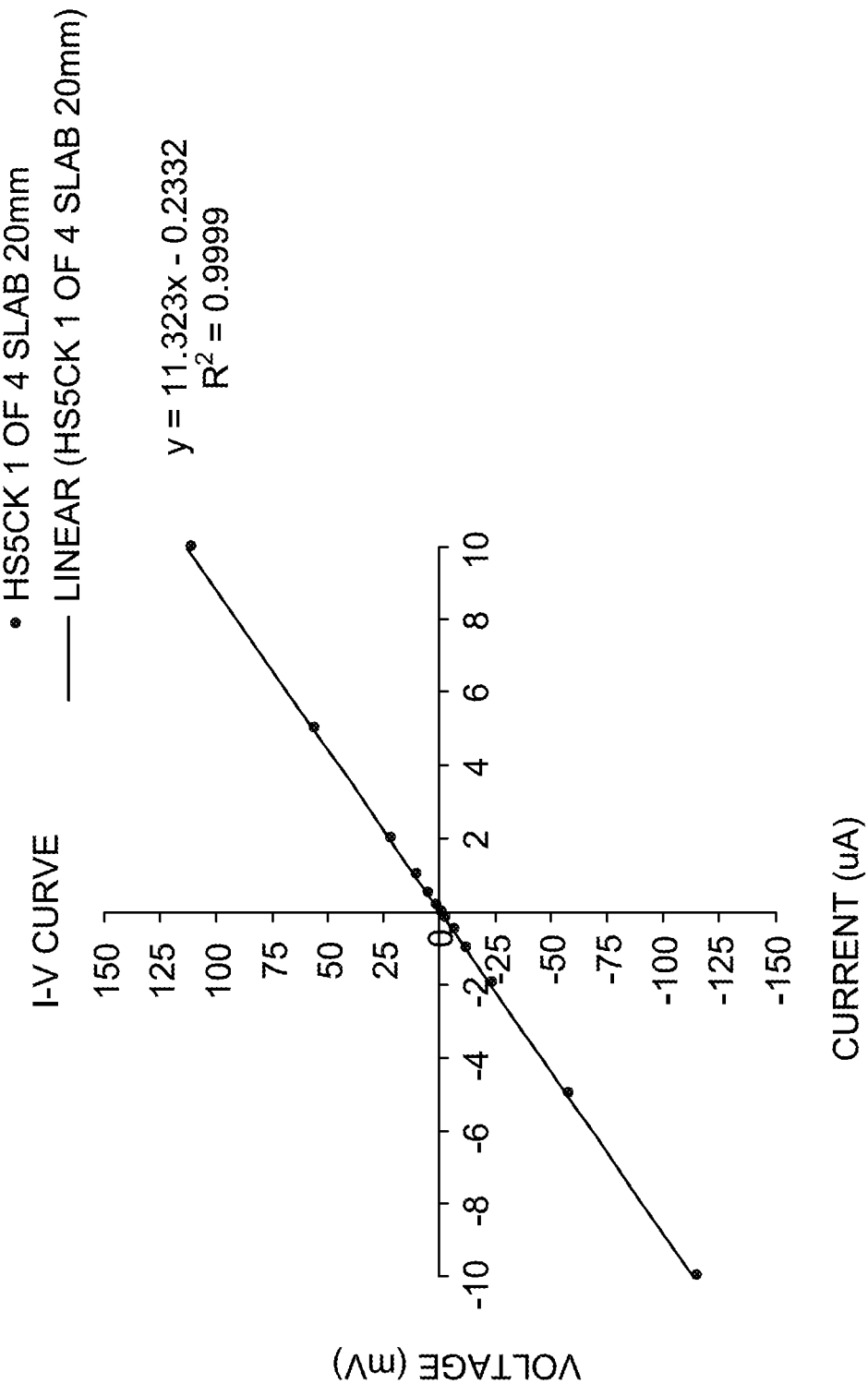
I-V CURVE
HS5CK 1 OF 4 SLAB 20mm
LINEAR (HS5CK 1 OF 4 SLAB 20mm)
y = 11.323x - 0.2332
R2 = 0.9999
VOLTAGE (mV)
CURRENT (uA)
150
125
100
75
50
25
0
-25
-50
-75
-100
-125
-150
10
8
6
4
2
-2
-4
-6
-8
-10

FIG. 5

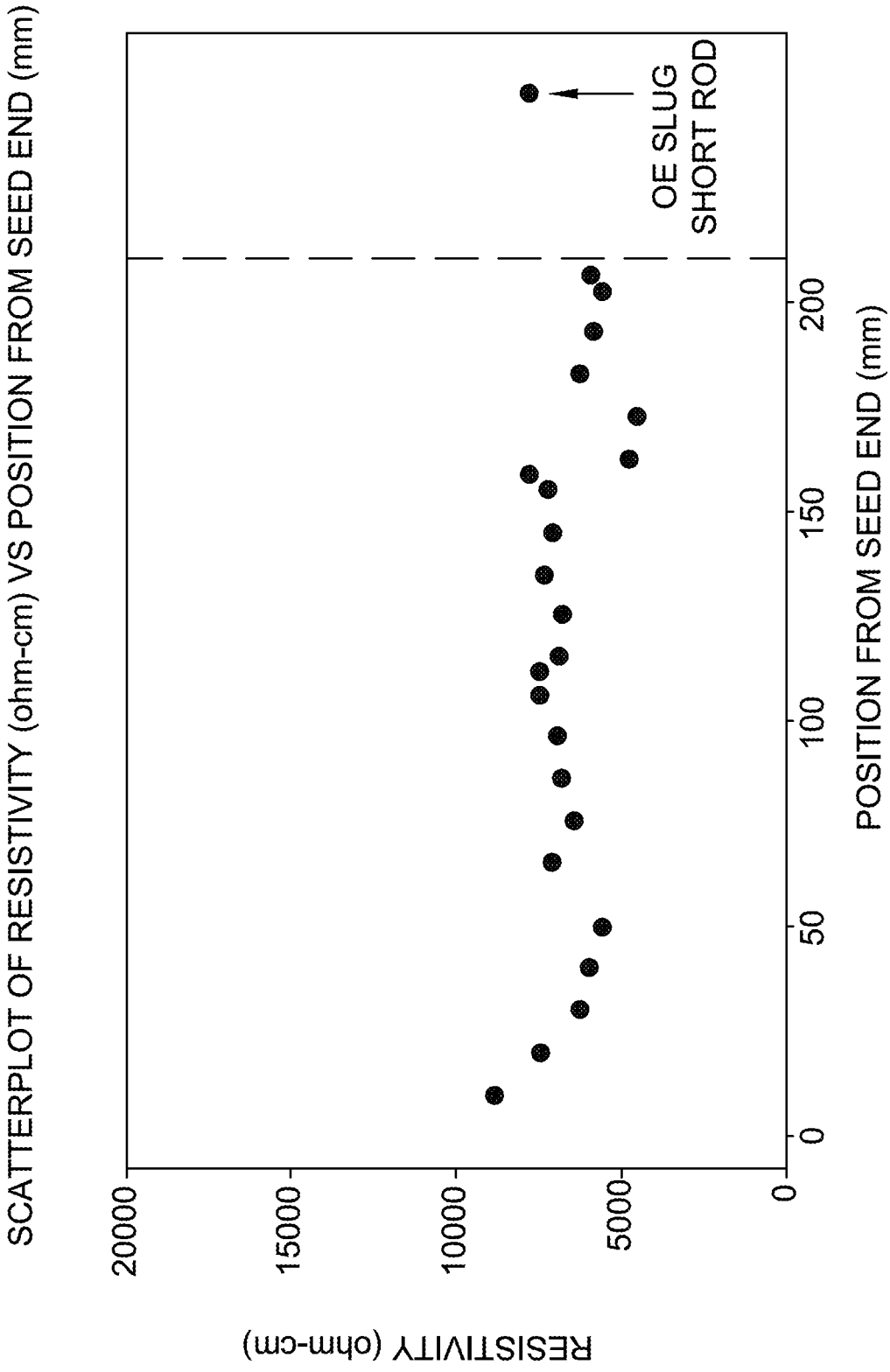
SCATTERPLOT OF RESISTIVITY (ohm-cm) VS POSITION FROM SEED END (mm)
OE SLUG
SHORT ROD
RESISTIVITY (ohm-cm)
20000
15000
10000
5000
0
0
50
100
150
200
POSITION FROM SEED END (mm)

FIG. 6