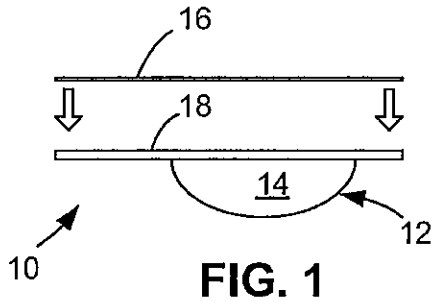


FIG. 1
(PRIOR ART)

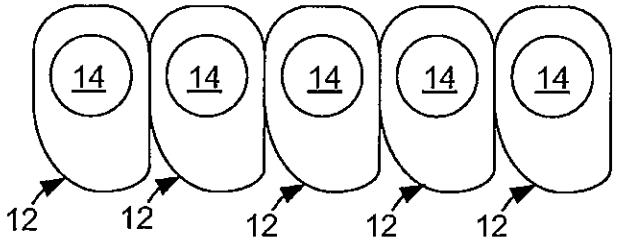


FIG. 2
(PRIOR ART)

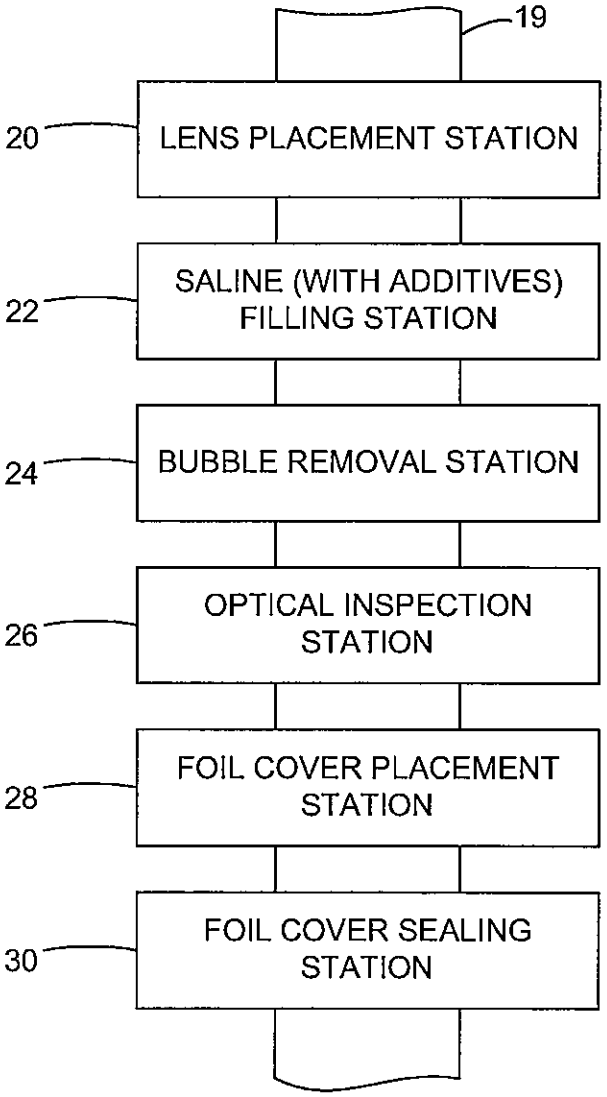


FIG. 3
(PRIOR ART)

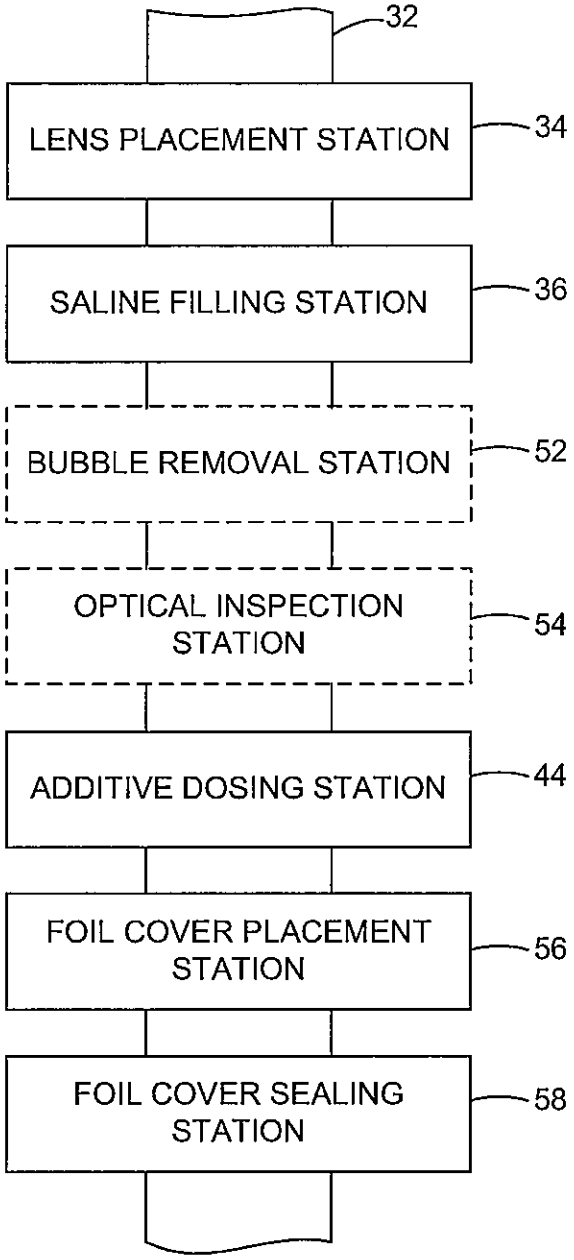


FIG. 4

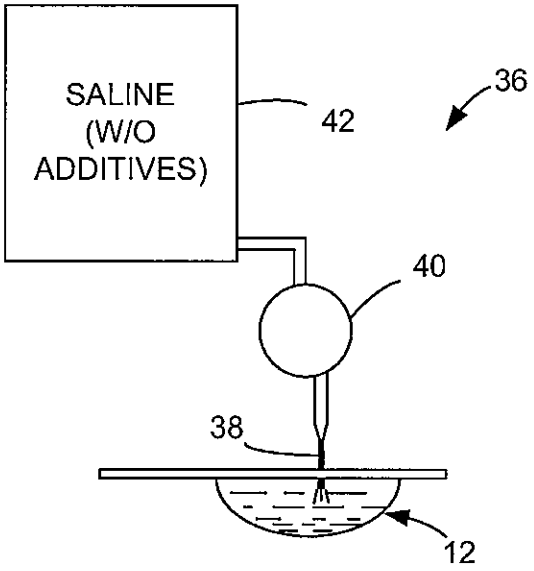


FIG. 5

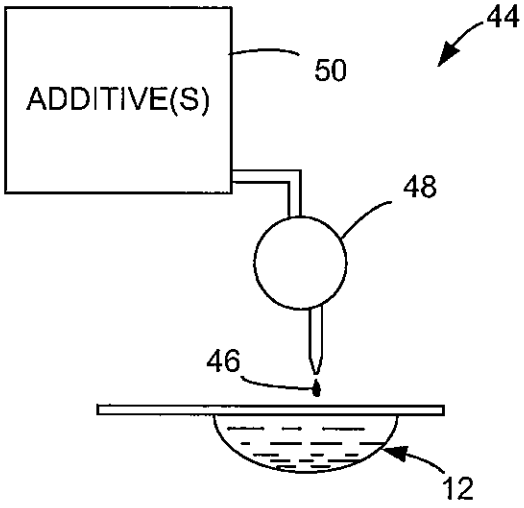


FIG. 6