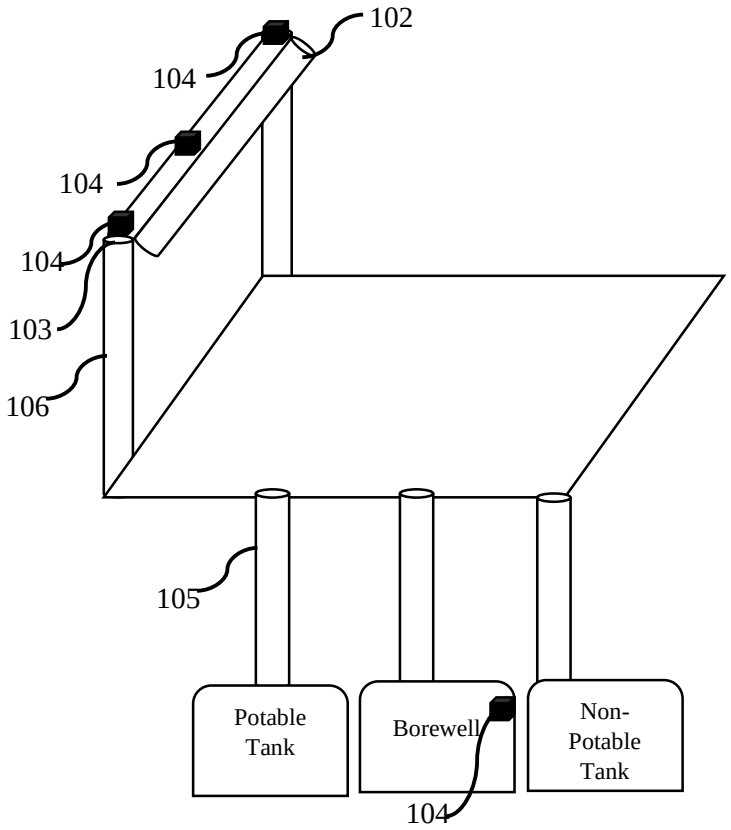
102
104
104
104
103
106
105
Potable Tank
Borewell
Non-Potable Tank
104

FIG. 1a

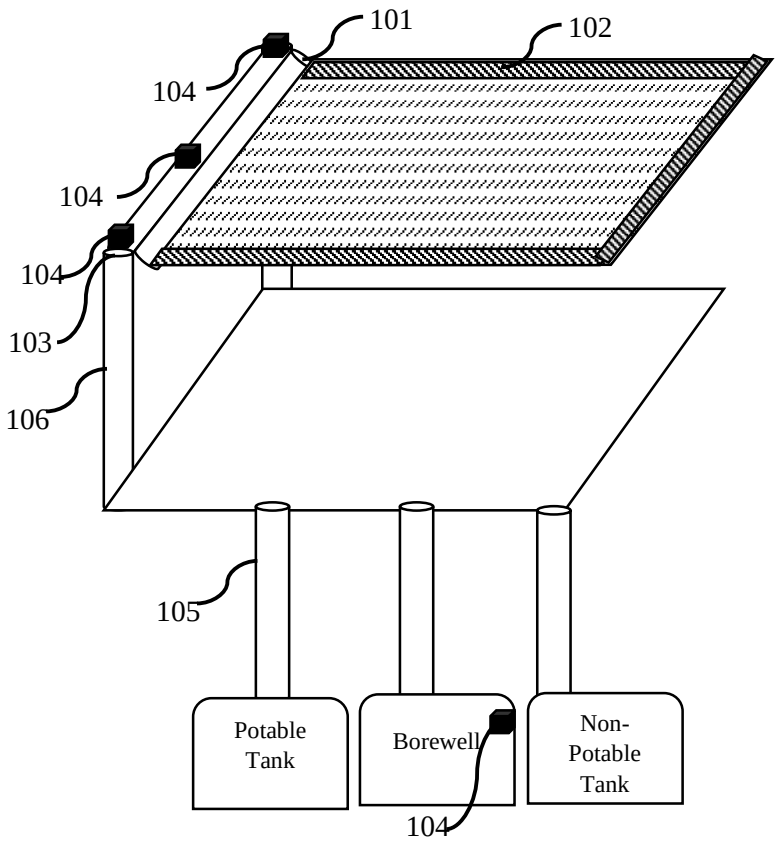
101
102
104
104
104
103
106
105
Potable Tank
Borewell
Non-Potable Tank
104

FIG. 1b

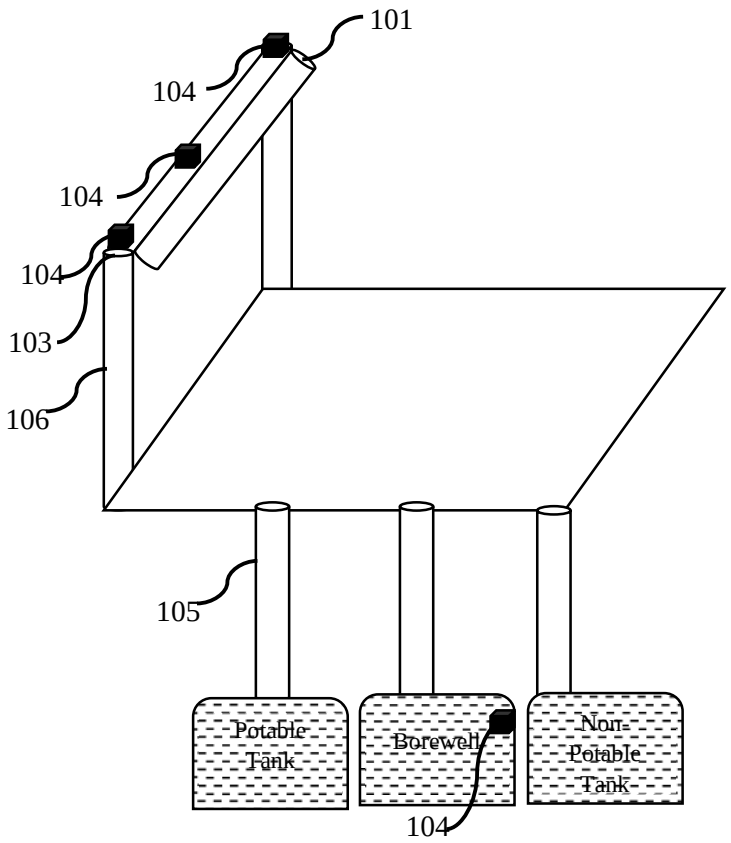
101
104
104
104
103
106
105
Potable Tank
Borewell
Non-Potable Tank
104

FIG. 1c

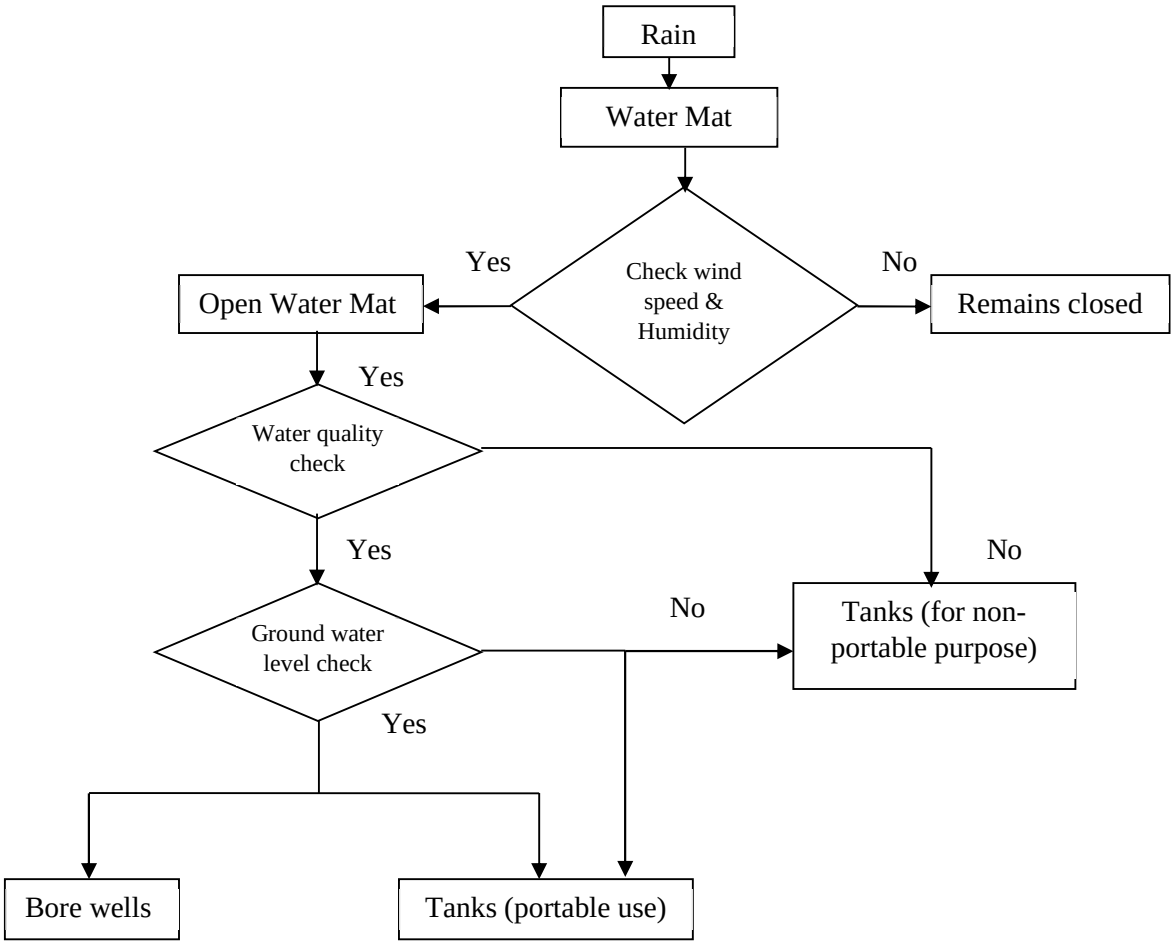
Rain
Water Mat
Check wind speed & Humidity
Yes
No
Open Water Mat
Remains closed
Yes
Water quality check
Yes
No
Ground water level check
No
Tanks (for non-portable purpose)
Yes
Bore wells
Tanks (portable use)

FIG. 2