(12) INTERNATIONAL APPLICATION PUBLISHED UNDER THE PATENT COOPERATION TREATY (PCT)

(19) World Intellectual Property Organization
International Bureau

(43) International Publication Date
22 September 2022 (22.09.2022)

WIPO | PCT

(10) International Publication Number
WO 2022/192942 A1

(51) International Patent Classification:
G05D 7/06 (2006.01) *G05D 9/12* (2006.01)
G01F 23/284 (2006.01) *E03D 5/10* (2006.01)
G05B 19/042 (2006.01)

(21) International Application Number:
PCT/AU2022/050219

(22) International Filing Date:
15 March 2022 (15.03.2022)

(25) Filing Language: English

(26) Publication Language: English

(30) Priority Data:
2021900738 15 March 2021 (15.03.2021) AU

(71) Applicants: **CAROMA IDUSTRIES LIMITED** [AU/AU]; Level 24, 100 Mount Street, North Sydney, New South Wales 2060 (AU). **MICAS AG** [DE/DE]; Turleyring 18-22, D-09376 Oelsnitz (DE).

(72) Inventors: **CUMMINGS, Stephen John**; 15/25-31 Darley Street, East Mona Vale, New South Wales 2103 (AU). **FRITZSCHE, Michael**; Feldstrasse 10c, 09221 Neukirchen/Erzgebirge (DE). **EBERT, Mark**; Lugauer Str. 50, 09376 Oelsnitz/Erzgebirge (DE).

(74) Agent: **SPRUSON & FERGUSON**; GPO BOX 3898, Sydney, New South Wales 2001 (AU).

(81) Designated States *(unless otherwise indicated, for every kind of national protection available)*: AE, AG, AL, AM, AO, AT, AU, AZ, BA, BB, BG, BH, BN, BR, BW, BY, BZ, CA, CH, CL, CN, CO, CR, CU, CZ, DE, DJ, DK, DM, DO, DZ, EC, EE, EG, ES, FI, GB, GD, GE, GH, GM, GT, HN, HR, HU, ID, IL, IN, IR, IS, IT, JM, JO, JP, KE, KG, KH, KN, KP, KR, KW, KZ, LA, LC, LK, LR, LS, LU, LY, MA, MD, ME, MG, MK, MN, MW, MX, MY, MZ, NA, NG, NI, NO, NZ, OM, PA, PE, PG, PH, PL, PT, QA, RO, RS, RU, RW, SA, SC, SD, SE, SG, SK, SL, ST, SV, SY, TH, TJ, TM, TN, TR, TT, TZ, UA, UG, US, UZ, VC, VN, WS, ZA, ZM, ZW.

(84) Designated States *(unless otherwise indicated, for every kind of regional protection available)*: ARIPO (BW, GH, GM, KE, LR, LS, MW, MZ, NA, RW, SD, SL, ST, SZ, TZ, UG, ZM, ZW), Eurasian (AM, AZ, BY, KG, KZ, RU, TJ, TM), European (AL, AT, BE, BG, CH, CY, CZ, DE, DK, EE, ES, FI, FR, GB, GR, HR, HU, IE, IS, IT, LT, LU, LV, MC, MK, MT, NL, NO, PL, PT, RO, RS, SE, SI, SK, SM, TR), OAPI (BF, BJ, CF, CG, CI, CM, GA, GN, GQ, GW, KM, ML, MR, NE, SN, TD, TG).

(54) Title: A WATER CONSUMER SYSTEM HAVING A WATER CONSUMER, AND METHOD FOR OPERATING A WATER CONSUMER SYSTEM

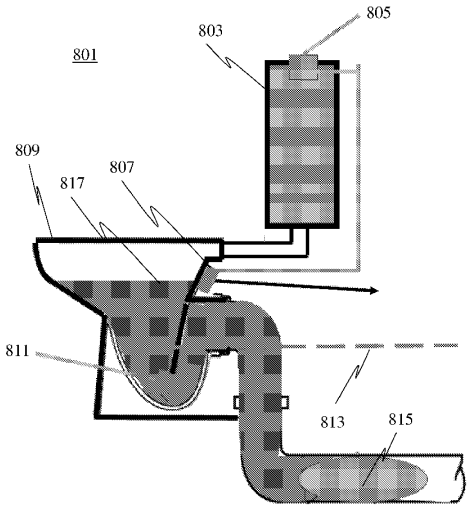

Fig. 8A

(57) Abstract: A water consumer system comprising a water consumer that comprises a water receptacle, the water consumer system further comprising a fluid inlet with an inlet valve, a fluid outlet, at least one HF motion sensor for detecting fluid motion provided on the water receptacle and/or at the fluid outlet and a water consumer controller coupled with the HF motion sensor and the inlet valve, wherein the water consumer controller comprises a data processing system, which is arranged to Retrieve or receive data captured by the HF motion sensor, to evaluate the data arithmetically and, based on the evaluated data, to detect one of the following malfunctions or initiate an action, in order to prevent one out of the variety of the following malfunctions, such as that the outlet is obstructed, there is a pressure fluctuation in a wastewater system, the fluid inlet is malfunctioning, etc.

WO 2022/192942 A1

[Continued on next page]

Published:
— *with international search report (Art. 21(3))*