Fig.1

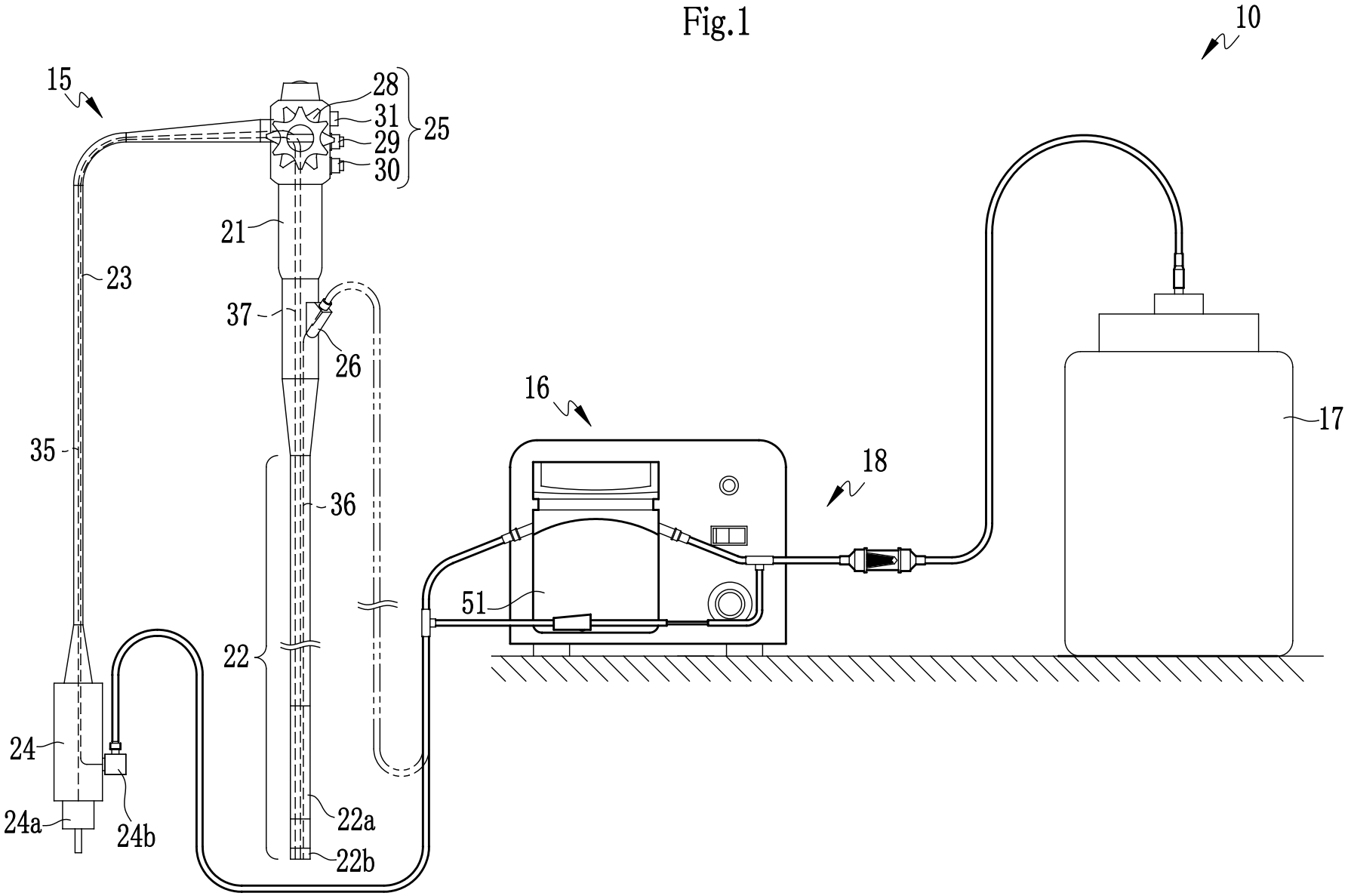
10
15
28
31
29
30
25
21
23
37
26
16
18
17
35
36
51
22
24
24a
24b
22a
22b

Fig.2

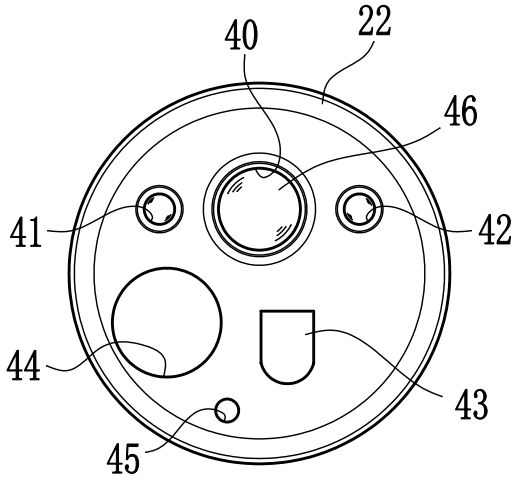

Fig.3

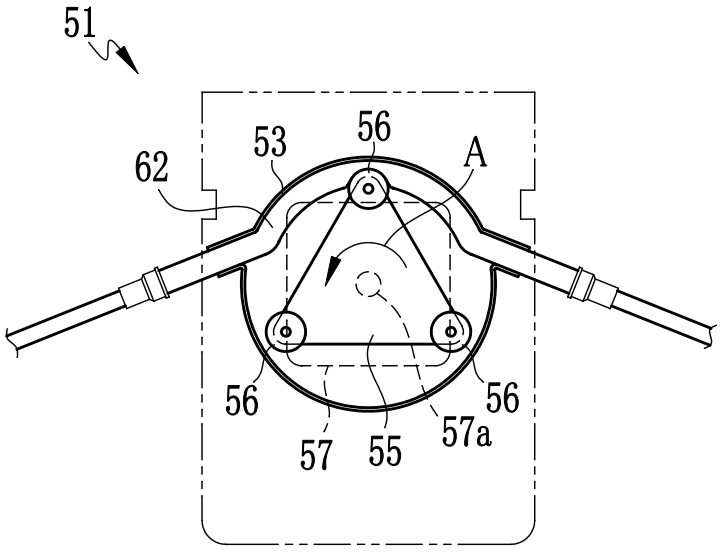

Fig.4

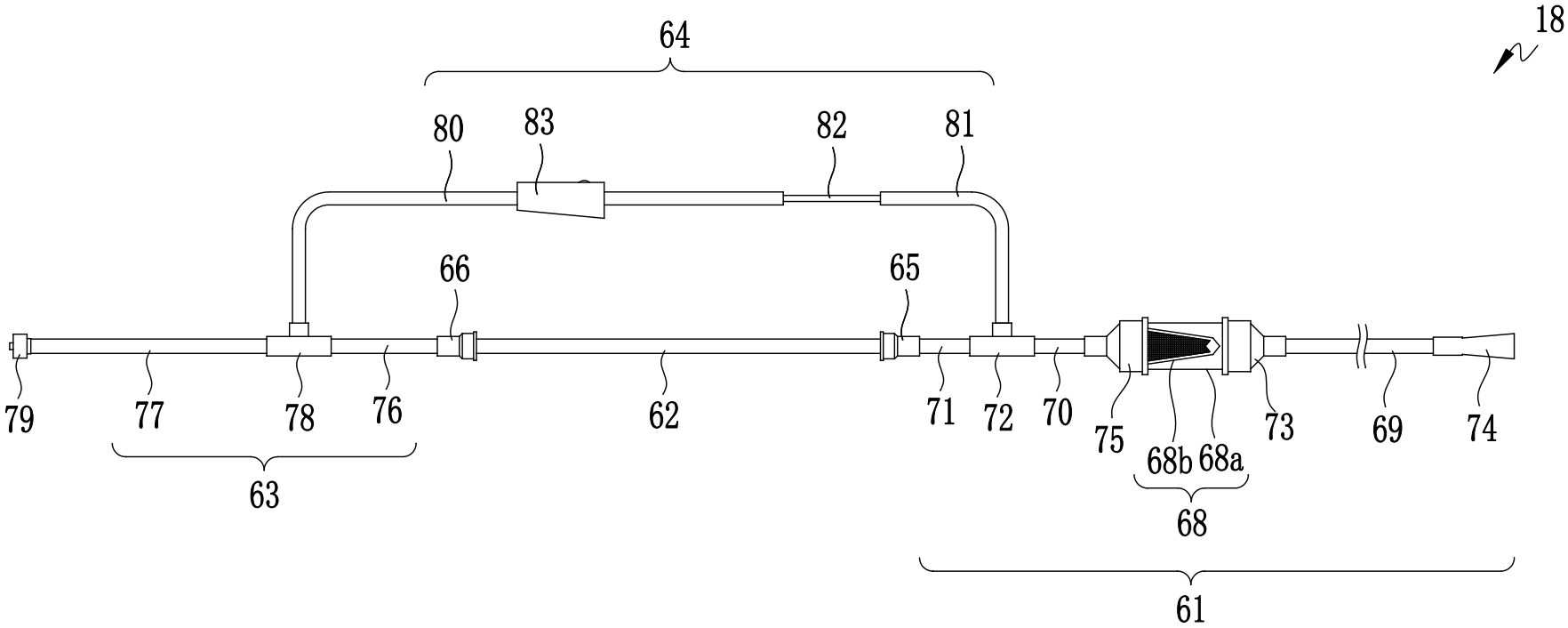
18
64
80
83
82
81
66
65
79
77
78
76
62
71
72
70
75
68b
68a
73
69
74
63
68
61

Fig.5A

ELAPSED TIME	DISCHARGE AMOUNT	CHANGE AMOUNT	WATER DRIPPING
30(s)	260(ml)	260(ml)	NONE
60(s)	518(ml)	258(ml)	NONE
90(s)	776(ml)	258(ml)	NONE
120(s)	1034(ml)	258(ml)	NONE
150(s)	1292(ml)	258(ml)	NONE
	Ave	258.4(ml)	

Fig.5B

ELAPSED TIME	DISCHARGE AMOUNT	CHANGE AMOUNT	WATER DRIPPING
30(s)	346(ml)	346(ml)	NONE
60(s)	692(ml)	346(ml)	NONE
90(s)	1036(ml)	344(ml)	NONE
120(s)	1382(ml)	346(ml)	NONE
150(s)	1725(ml)	343(ml)	NONE
	Ave	343(ml)	

Fig.6A

ELAPSED TIME	DISCHARGE AMOUNT	CHANGE AMOUNT	WATER DRIPPING
30(s)	106(ml)	106(ml)	ONE SECIND OR LESS
60(s)	210(ml)	104(ml)	ONE SECIND OR LESS
90(s)	314(ml)	104(ml)	ONE SECIND OR LESS
120(s)	418(ml)	104(ml)	ONE SECIND OR LESS
150(s)	522(ml)	104(ml)	ONE SECIND OR LESS
	Ave	104.4(ml)	

Fig.6B

ELAPSED TIME	DISCHARGE AMOUNT	CHANGE AMOUNT	WATER DRIPPING
30(s)	134(ml)	134(ml)	ABOUT FIVE SECOND
60(s)	270(ml)	136(ml)	ABOUT FIVE SECOND
90(s)	404(ml)	134(ml)	ABOUT FIVE SECOND
120(s)	536(ml)	132(ml)	ABOUT FIVE SECOND
150(s)	670(ml)	134(ml)	ABOUT FIVE SECOND
	Ave	134(ml)	