(12) INTERNATIONAL APPLICATION PUBLISHED UNDER THE PATENT COOPERATION TREATY (PCT)

(19) World Intellectual Property Organization
International Bureau

(43) International Publication Date
6 March 2003 (06.03.2003)

PCT

(10) International Publication Number
WO 03/018144 A1

(51) International Patent Classification[7]: A63B 59/06

(21) International Application Number: PCT/US02/04020

(22) International Filing Date: 8 February 2002 (08.02.2002)

(25) Filing Language: English

(26) Publication Language: English

(30) Priority Data:
09/939,319 27 August 2001 (27.08.2001) US

(71) Applicant *(for all designated States except US)*: **INNER-CORE GRIP COMPANY** [US/US]; 1434 Sugartown Road, Berwyn, PA 19312 (US).

(71) Applicants and
(72) Inventors: **FALONE, Thomas** [US/US]; 9 Still Run Drive, Mickelton, NJ 08056 (US). **DIMARIO, Carmen** [US/US]; 1851 Huntsman Lane, West Chester, PA 19382 (US). **VITO, Robert, A.** [US/US]; 1434 Sugartown Road, Berwyn, PA 19312 (US).

(74) Agent: **PEZZNER, Harold**; Connolly Bove Lodge & Hutz LLP, 1220 Market Street, Wilmington, DE 19801 (US).

(81) Designated States *(national)*: AL, AM, AT, AU, AZ, BA, BB, BG, BR, BY, CA, CH, CN, CU, CZ, DE, DK, EE, ES, FI, GB, GE, GH, GM, HU, ID, IL, IS, JP, KE, KG, KP, KR, KZ, LC, LK, LR, LS, LT, LU, LV, MD, MG, MK, MN, MW, MX, NO, NZ, PL, PT, RO, RU, SD, SE, SG, SI, SK, SL, TJ, TM, TR, TT, UA, UG, US, UZ, VN, YU, ZW.

(84) Designated States *(regional)*: ARIPO patent (GH, GM, KE, LS, MW, MZ, SD, SL, SZ, TZ, UG, ZM, ZW), Eurasian patent (AM, AZ, BY, KG, KZ, MD, RU, TJ, TM), European patent (AT, BE, CH, CY, DE, DK, ES, FI, FR,

[Continued on next page]

(54) Title: VIBRATION DAMPENING GRIP COVER FOR THE HANDLE OF AN IMPLEMENT

(57) Abstract: A vibration dampening grip cover (10) for the handle (18) of an implement (12) is preferably of multilayer laminate form having an inner vibration dampening layer (22) and an outer gripping layer (24). A further inner force dissipating stiffening layer (26) is included in the laminate.

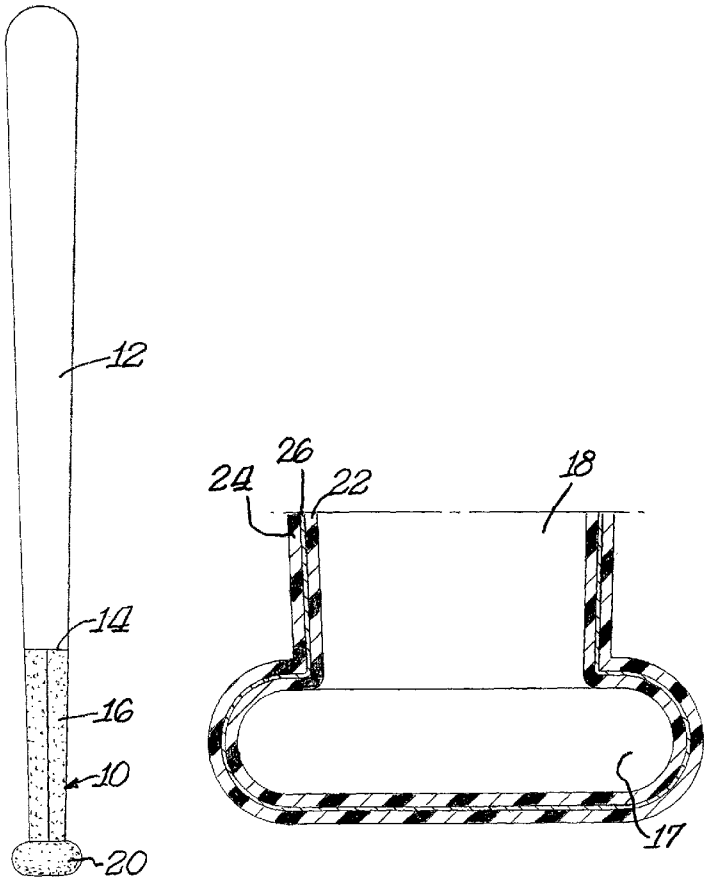

WO 03/018144 A1

GB, GR, IE, IT, LU, MC, NL, PT, SE, TR), OAPI patent (BF, BJ, CF, CG, CI, CM, GA, GN, GQ, GW, ML, MR, NE, SN, TD, TG).

For two-letter codes and other abbreviations, refer to the "Guidance Notes on Codes and Abbreviations" appearing at the beginning of each regular issue of the PCT Gazette.

Published:
— *with international search report*