(12) INTERNATIONAL APPLICATION PUBLISHED UNDER THE PATENT COOPERATION TREATY (PCT)

(19) World Intellectual Property Organization
International Bureau

(43) International Publication Date
28 July 2005 (28.07.2005)

PCT

(10) International Publication Number
WO 2005/067516 A2

(51) International Patent Classification: Not classified

(21) International Application Number:
PCT/US2004/007598

(22) International Filing Date: 12 March 2004 (12.03.2004)

(25) Filing Language: English

(26) Publication Language: English

(30) Priority Data:
10/742,125 19 December 2003 (19.12.2003) US

(71) Applicant *(for all designated States except US)*: **ADVANCED TECHNOLOGY MATERIALS, INC.** [US/US]; 7 Commerce Drive, Danbury, CT 06810 (US).

(72) Inventors; and

(75) Inventors/Applicants *(for US only)*: **O'DOUGHERTY, Kevin, T.** [US/US]; 1630 Glenview Court, Arden Hills, MN 55112 (US). **ANDREWS, Robert, E.** [US/US]; 12 Parkhurst Drive, Hudson, MA 01749 (US). **JAYARAMAN, Tripunithura, V.** [US/US]; 114 Olde Mill Lane, North kingstown, RI 02852 (US). **MENNING, Joseph, P.** [US/US]; 3062 Lake Haven ct., NW., Prior Lake, MI 55372 (US). **BAYE-WALLACE, Christopher, A.** [US/US]; 3206 16th Avenue, Anoka, MI 55303-1368 (US).

(74) Agent: **RYANN, William, F.**; Advanced Technology Materials, Inc., 7 Commerce Drive, Danbury, CT 06810 (US).

(81) Designated States *(unless otherwise indicated, for every kind of national protection available)*: AE, AG, AL, AM, AT, AU, AZ, BA, BB, BG, BR, BW, BY, BZ, CA, CH, CN, CO, CR, CU, CZ, DE, DK, DM, DZ, EC, EE, EG, ES, FI, GB, GD, GE, GH, GM, HR, HU, ID, IL, IN, IS, JP, KE, KG, KP, KR, KZ, LC, LK, LR, LS, LT, LU, LV, MA, MD, MG, MK, MN, MW, MX, MZ, NA, NI, NO, NZ, OM, PG, PH, PL, PT, RO, RU, SC, SD, SE, SG, SK, SL, SY, TJ, TM, TN, TR, TT, TZ, UA, UG, US, UZ, VC, VN, YU, ZA, ZM, ZW.

(84) Designated States *(unless otherwise indicated, for every kind of regional protection available)*: ARIPO (BW, GH, GM, KE, LS, MW, MZ, SD, SL, SZ, TZ, UG, ZM, ZW), Eurasian (AM, AZ, BY, KG, KZ, MD, RU, TJ, TM), European (AT, BE, BG, CH, CY, CZ, DE, DK, EE, ES, FI, FR, GB, GR, HU, IE, IT, LU, MC, NL, PL, PT, RO, SE, SI, SK, TR), OAPI (BF, BJ, CF, CG, CI, CM, GA, GN, GQ, GW, ML, MR, NE, SN, TD, TG).

**Published:**
— *without international search report and to be republished upon receipt of that report*

*For two-letter codes and other abbreviations, refer to the "Guidance Notes on Codes and Abbreviations" appearing at the beginning of each regular issue of the PCT Gazette.*

(54) Title: SECURE READER SYSTEM

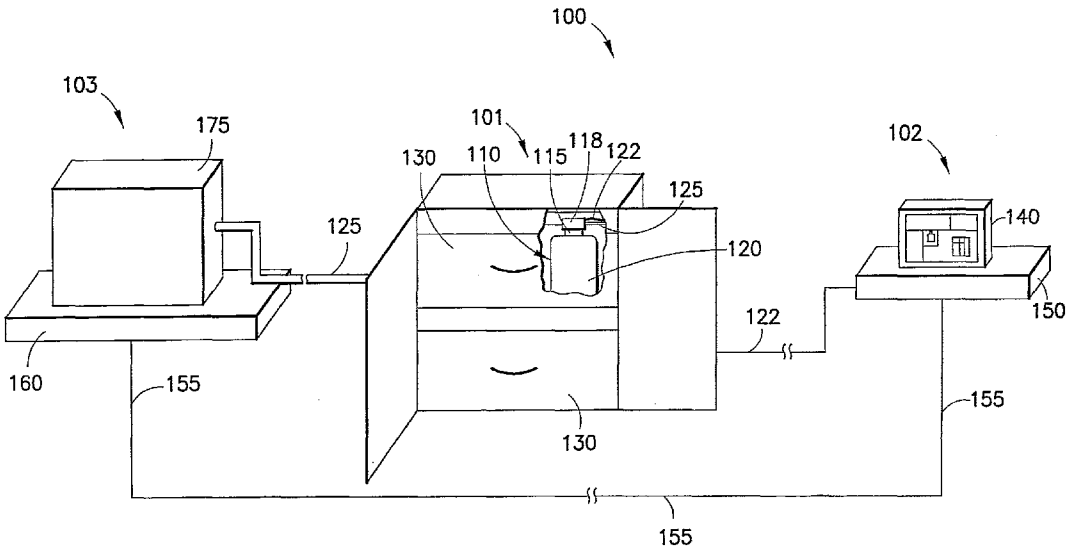


(57) Abstract: A secure reader system (SRS) for containers housing material to be employed in an application. A container is provided having an information storing mechanism. A connector of the SRS having a reader is provided to physically couple to the container for periodically reading information there from. The connector is configured to physically couple to the container and may draw material from the container simultaneous with the reading.

WO 2005/067516 A2