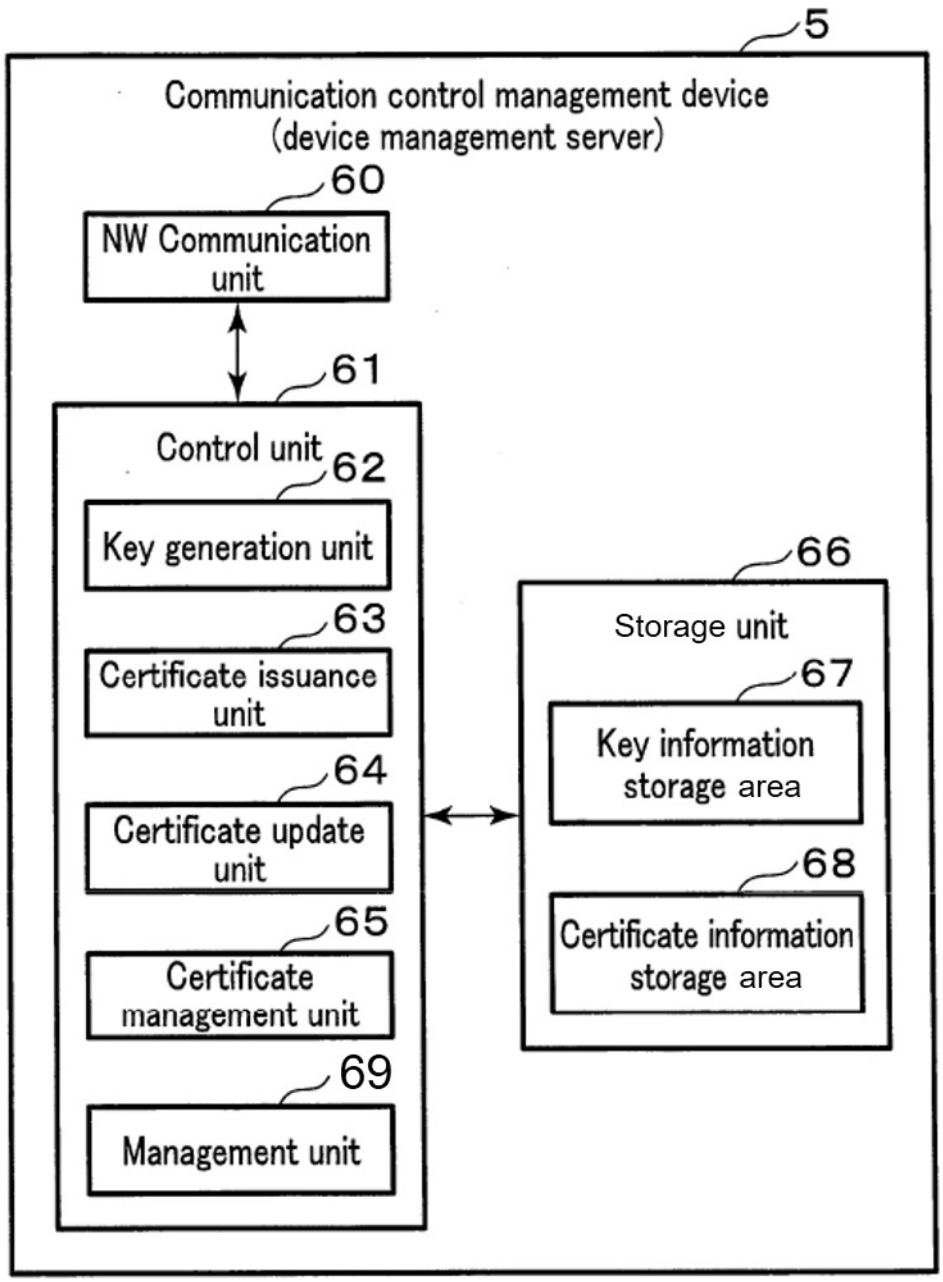
5
Communication control management device
(device management server)
60
NW Communication unit
61
Control unit
62
Key generation unit
63
Certificate issuance unit
64
Certificate update unit
65
Certificate management unit
69
Management unit
66
Storage unit
67
Key information storage area
68
Certificate information storage area

FIG. 6

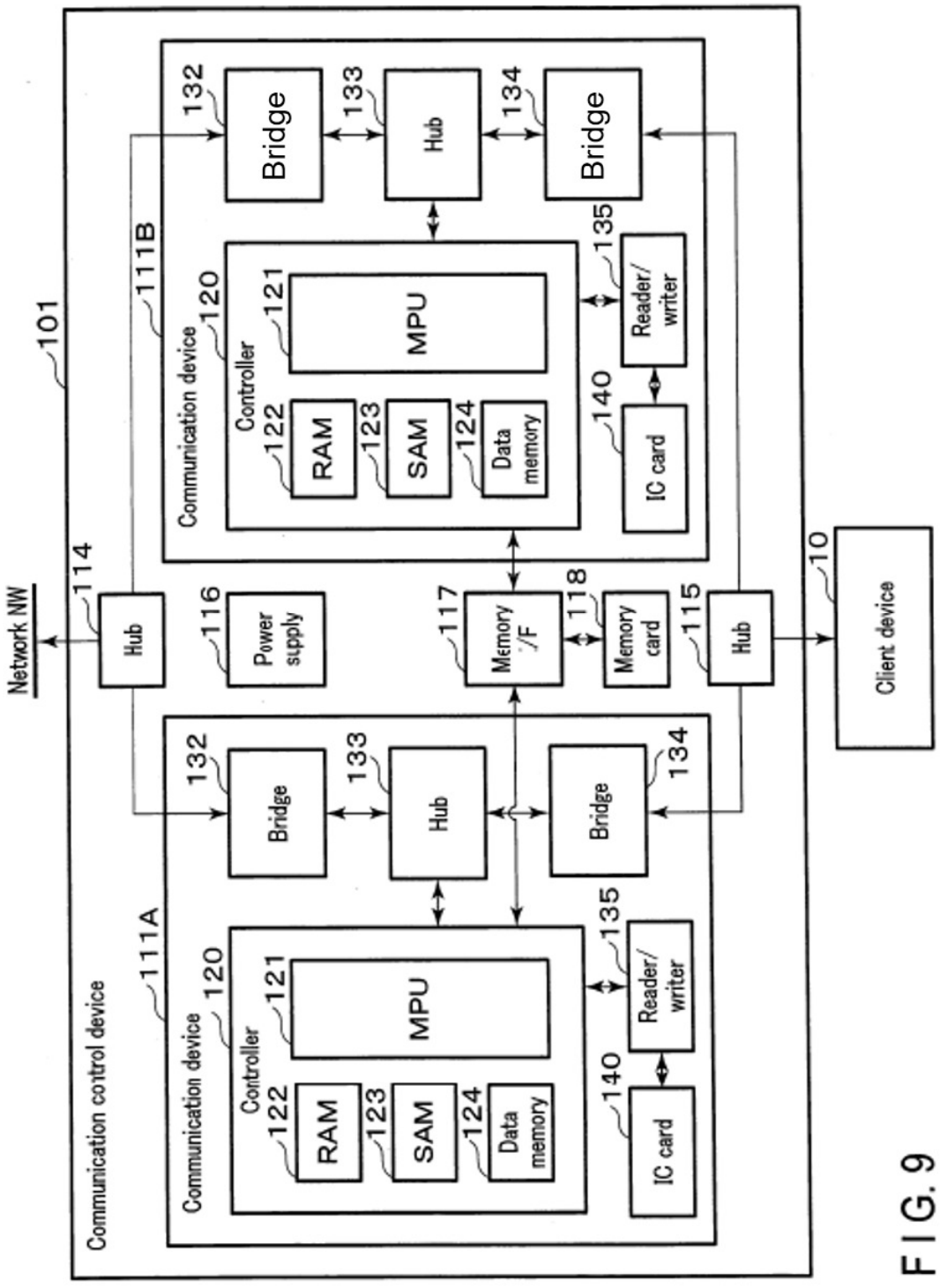
Network NW
114
Hub
101
Communication control device
111B
Communication device
120
Controller
121
MPU
122
RAM
123
SAM
124
Data memory
132
Bridge
133
Hub
134
Bridge
135
Reader/ writer
140
IC card
116
Power supply
117
Memory I/F
118
Memory card
115
Hub
10
Client device
111A
Communication device
120
Controller
121
MPU
122
RAM
123
SAM
124
Data memory
132
Bridge
133
Hub
134
Bridge
135
Reader/ writer
140
IC card

FIG. 9

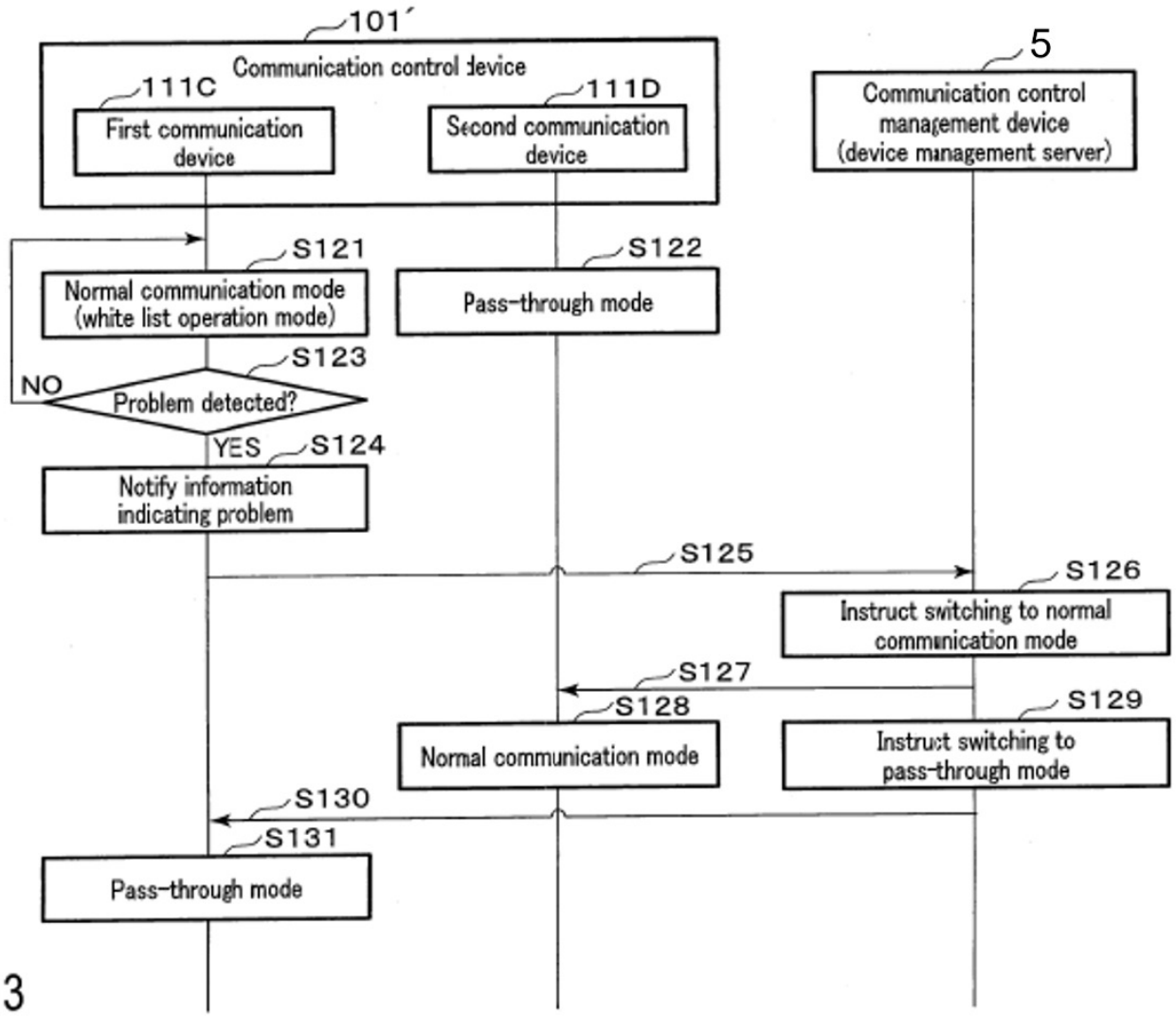
101´
Communication control device
111C
First communication device
111D
Second communication device
5
Communication control management device (device management server)
S121
Normal communication mode (white list operation mode)
S122
Pass-through mode
S123
NO
Problem detected?
YES
S124
Notify information indicating problem
S125
S126
Instruct switching to normal communication mode
S127
S128
Normal communication mode
S129
Instruct switching to pass-through mode
S130
S131
Pass-through mode

FIG. 13

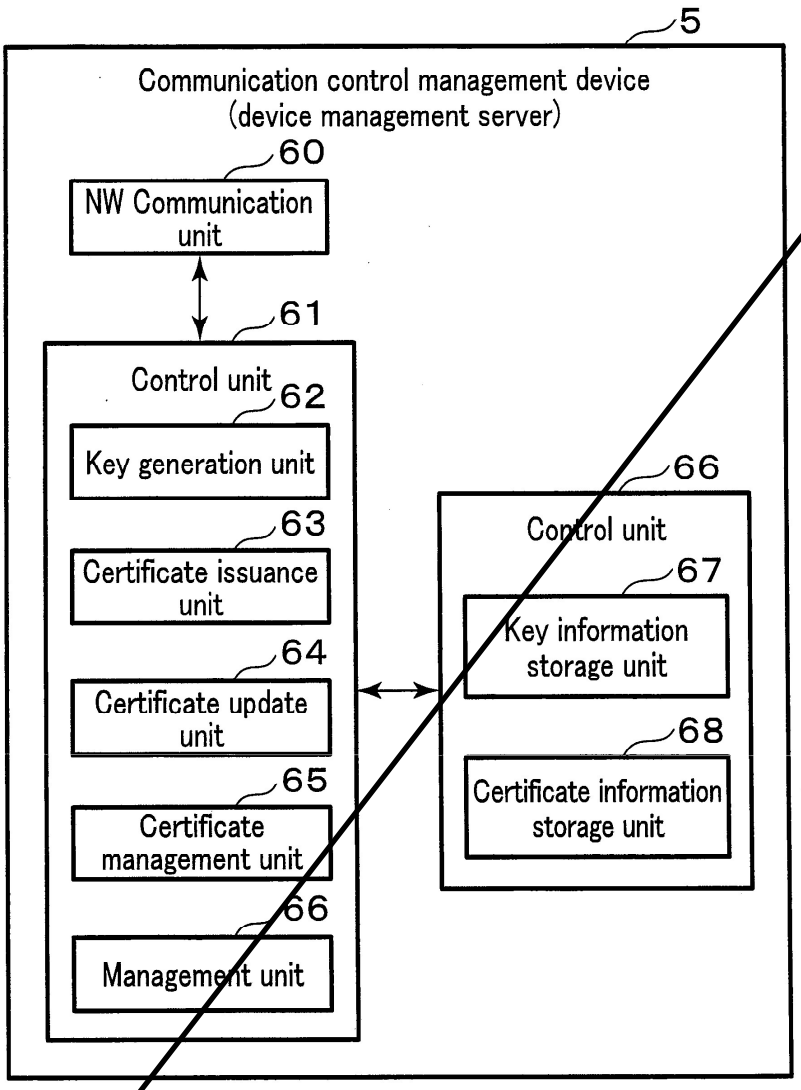
5
Communication control management device
(device management server)
60
NW Communication unit
61
Control unit
62
Key generation unit
63
Certificate issuance unit
64
Certificate update unit
65
Certificate management unit
66
Management unit
66
Control unit
67
Key information storage unit
68
Certificate information storage unit

FIG. 6

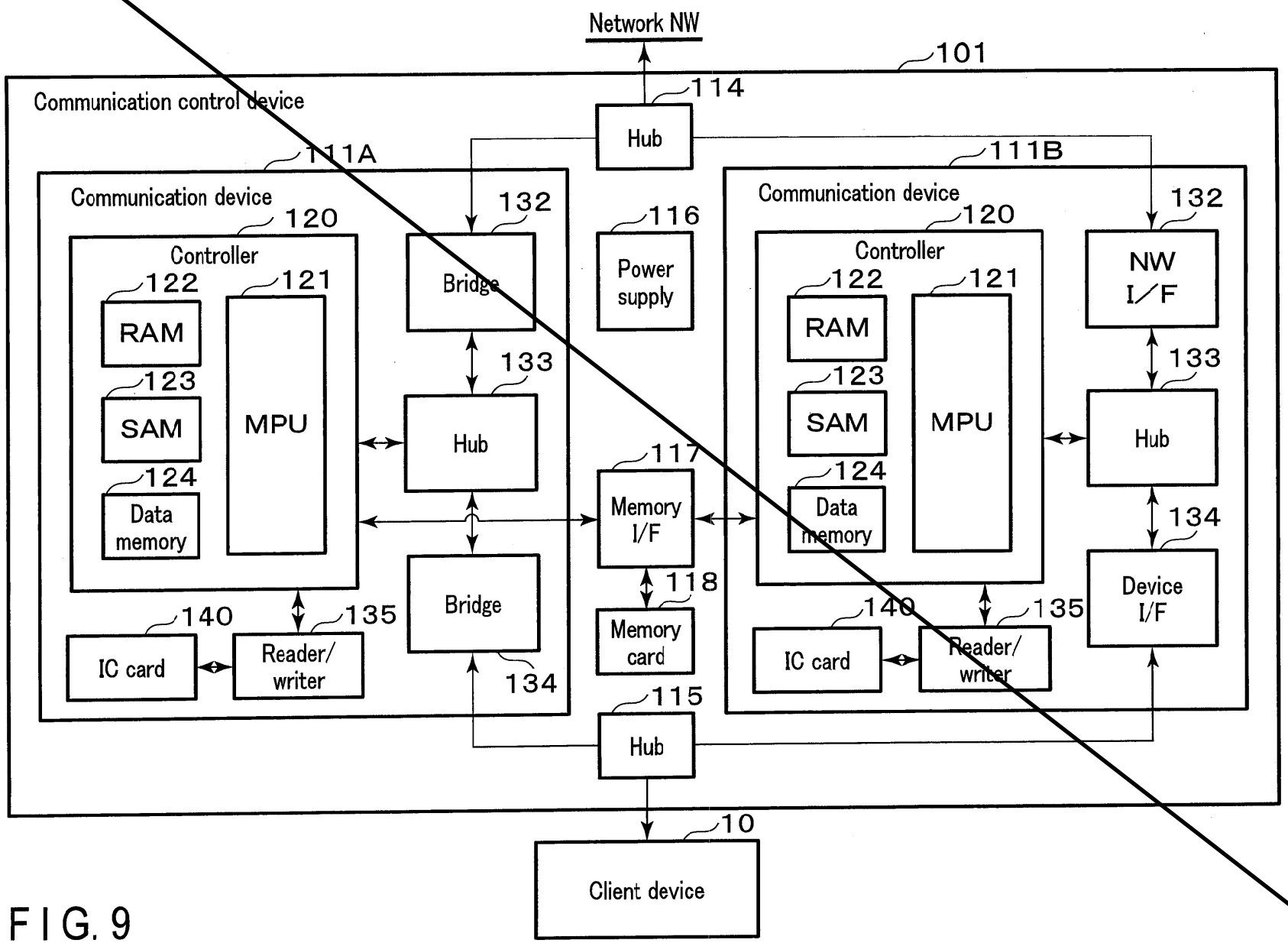
Network NW
101
Communication control device
114
Hub
111A
Communication device
120
Controller
122
RAM
123
SAM
124
Data memory
121
MPU
132
Bridge
133
Hub
Bridge
134
140
IC card
135
Reader/ writer
116
Power supply
117
Memory I/F
118
Memory card
115
Hub
111B
Communication device
120
Controller
122
RAM
123
SAM
124
Data memory
121
MPU
132
NW I/F
133
Hub
134
Device I/F
140
IC card
135
Reader/ writer
10
Client device

FIG. 9

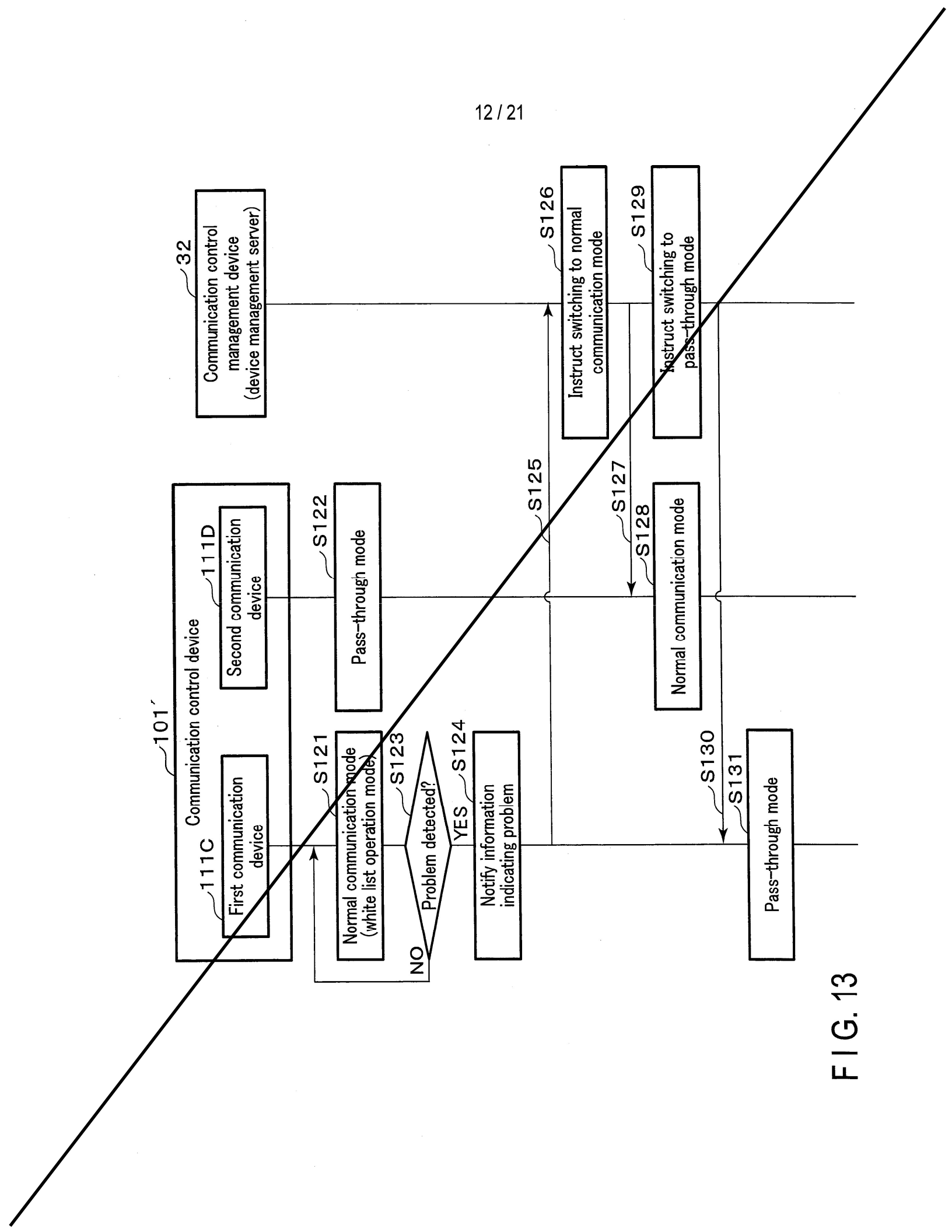
101'
Communication control device
111C
First communication device
111D
Second communication device
32
Communication control management device (device management server)
S121
Normal communication mode (white list operation mode)
S122
Pass-through mode
S123
Problem detected?
NO
YES
S124
Notify information indicating problem
S125
S126
Instruct switching to normal communication mode
S127
S128
Normal communication mode
S129
Instruct switching to pass-through mode
S130
S131
Pass-through mode

FIG. 13