(12) INTERNATIONAL APPLICATION PUBLISHED UNDER THE PATENT COOPERATION TREATY (PCT)

(19) World Intellectual Property Organization
International Bureau

(43) International Publication Date
19 January 2006 (19.01.2006)

PCT

(10) International Publication Number
WO 2006/005390 A1

(51) International Patent Classification[7]: G10L 19/00

(21) International Application Number:
PCT/EP2005/005199

(22) International Filing Date: 12 May 2005 (12.05.2005)

(25) Filing Language: English

(26) Publication Language: English

(30) Priority Data:
60/586,578 9 July 2004 (09.07.2004) US
10/935,061 7 September 2004 (07.09.2004) US

(71) Applicants *(for all designated States except US)*: **FRAUNHOFER-GESELLSCHAFT ZUR FÖRDERUNG DER ANGEWANDTEN FORSCHUNG E.V.** [DE/DE]; Hansastrasse 27c, 80686 München (DE). **AGERE SYSTEMS INC.** [US/US]; 1110 American Parkway NE, Allentown, Pennsylvania 18109 (US).

(72) Inventors; and

(75) Inventors/Applicants *(for US only)*: **HERRE, Jürgen** [DE/DE]; Hallerstr. 24, 91054 Buckhof (DE). **FALLER, Christof** [CH/CH]; Guetrain 1, CH-8274 Trägerwilen (CH). **DISCH, Sascha** [DE/DE]; Turnstr. 7, 90763 Fürth (DE). **HILPERT, Johannes** [DE/DE]; Herrnhüttestr. 46, 90411 Nürnberg (DE).

(74) Agents: **ZINKLER, Franz** et al.; Schoppe, Zimmermann, Stöckeler & Zinkler, Postfach 246, 82043 Pullach bei München (DE).

(81) Designated States *(unless otherwise indicated, for every kind of national protection available)*: AE, AG, AL, AM, AT, AU, AZ, BA, BB, BG, BR, BW, BY, BZ, CA, CH, CN, CO, CR, CU, CZ, DE, DK, DM, DZ, EC, EE, EG, ES, FI, GB, GD, GE, GH, GM, HR, HU, ID, IL, IN, IS, JP, KE, KG, KM, KP, KR, KZ, LC, LK, LR, LS, LT, LU, LV, MA, MD, MG, MK, MN, MW, MX, MZ, NA, NG, NI, NO, NZ, OM, PG, PH, PL, PT, RO, RU, SC, SD, SE, SG, SK, SL, SM, SY, TJ, TM, TN, TR, TT, TZ, UA, UG, US, UZ, VC, VN, YU, ZA, ZM, ZW.

(84) Designated States *(unless otherwise indicated, for every kind of regional protection available)*: ARIPO (BW, GH, GM, KE, LS, MW, MZ, NA, SD, SL, SZ, TZ, UG, ZM, ZW), Eurasian (AM, AZ, BY, KG, KZ, MD, RU, TJ, TM), European (AT, BE, BG, CH, CY, CZ, DE, DK, EE, ES, FI, FR, GB, GR, HU, IE, IS, IT, LT, LU, MC, NL, PL, PT, RO, SE, SI, SK, TR), OAPI (BF, BJ, CF, CG, CI, CM, GA, GN, GQ, GW, ML, MR, NE, SN, TD, TG).

Published:
— *with international search report*

For two-letter codes and other abbreviations, refer to the "Guidance Notes on Codes and Abbreviations" appearing at the beginning of each regular issue of the PCT Gazette.

(54) **Title:** APPARATUS AND METHOD FOR GENERATING A MULTI-CHANNEL OUTPUT SIGNAL

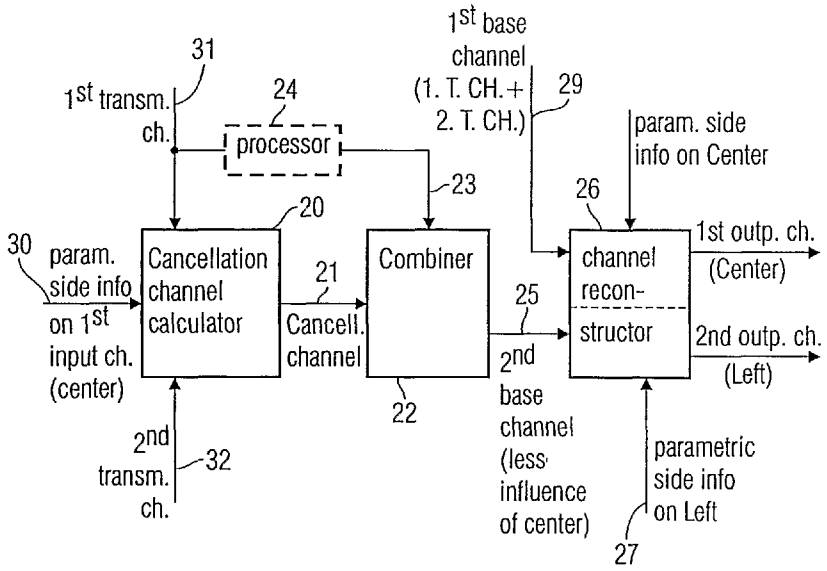

(57) **Abstract:** An apparatus for generating a multi-channel output signal performs a center channel cancellation to obtain improved base channels for reconstructing left-side output channels or right-side output channels. In particular, the apparatus includes a cancellation channel calculator (20) for calculating a cancellation channel using information related to the original center channel available at the decoder. The device furthermore includes a combiner (22) for combining a transmission channel with the cancellation channel. Finally, the apparatus includes a reconstructor (26) for generating the multi-channel output signal. Due to the center channel cancellation, the channel reconstructor (26) not only uses a different base channel for reconstructing the center channel but also uses base channels different from the transmission channels for reconstructing left and right output channels which have a reduced or even completely cancelled influence of the original center channel.

WO 2006/005390 A1