(12) INTERNATIONAL APPLICATION PUBLISHED UNDER THE PATENT COOPERATION TREATY (PCT)

(19) World Intellectual Property Organization
International Bureau

(43) International Publication Date
6 October 2005 (06.10.2005)

PCT

(10) International Publication Number
WO 2005/093315 A1

(51) International Patent Classification[7]: F17C 13/08

(21) International Application Number:
PCT/US2005/006749

(22) International Filing Date: 28 February 2005 (28.02.2005)

(25) Filing Language: English

(26) Publication Language: English

(30) Priority Data:
60/550,550 5 March 2004 (05.03.2004) US

(71) Applicant *(for all designated States except US)*: **NEW YORK BULK CARRIERS INC.** [US/US]; P.O. Box P, Milford, PA 18337 (US).

(72) Inventors; and
(75) Inventors/Applicants *(for US only)*: **GOLDBACH, Robert, D.** [US/US]; 320 Broad Street, Apartment 1, Milford, PA 18337 (US). **CUNEO, Joseph, J.** [US/US]; 213 Clinton Avenue, Dobbs-Ferry, NY 10522 (US).

(74) Agent: **HONE, William, J.**; Fish & Richardson P.C., Citigroup Center, 153 East 53rd Street, 52nd Floor, New York, NY 10022-4611 (US).

(81) Designated States *(unless otherwise indicated, for every kind of national protection available)*: AE, AG, AL, AM, AT, AU, AZ, BA, BB, BG, BR, BW, BY, BZ, CA, CH, CN, CO, CR, CU, CZ, DE, DK, DM, DZ, EC, EE, EG, ES, FI, GB, GD, GE, GH, GM, HR, HU, ID, IL, IN, IS, JP, KE, KG, KP, KR, KZ, LC, LK, LR, LS, LT, LU, LV, MA, MD, MG, MK, MN, MW, MX, MZ, NA, NI, NO, NZ, OM, PG, PH, PL, PT, RO, RU, SC, SD, SE, SG, SK, SL, SM, SY, TJ, TM, TN, TR, TT, TZ, UA, UG, US, UZ, VC, VN, YU, ZA, ZM, ZW.

(84) Designated States *(unless otherwise indicated, for every kind of regional protection available)*: ARIPO (BW, GH,

[Continued on next page]

(54) Title: SUPPORT ASSEMBLIES AND SYSTEMS FOR SEMI-MEMBRANE TANKS

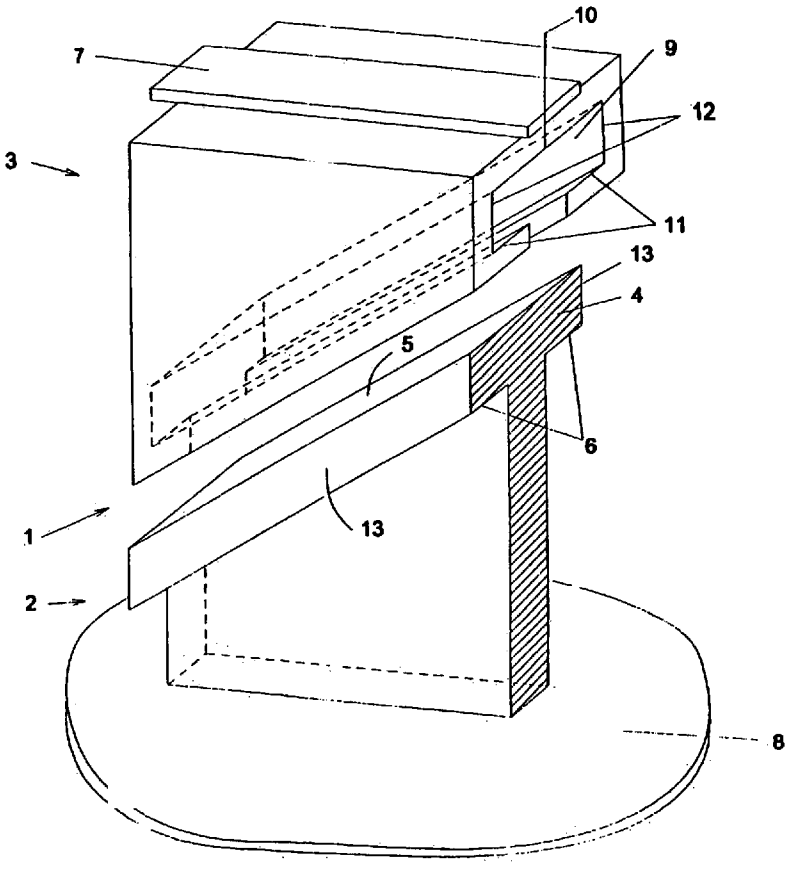

(57) Abstract: Support assemblies (1) for attaching the walls and top of a semi-membrane tank to surrounding support structure include interlocked angled sliding surfaces, where movement perpendicular to the walls and the top is permitted as well as movement along one line or two perpendicular lines parallel to the tank sides and top. Arrayed on the surfaces of the walls and tops, these support assemblies provide the necessary support for the tank walls and top while minimizing thermal stresses in the tank. Support systems comprising such arrays, surrounding support structure, and tank insulation can be assembled outside a ship and engagingly lowered into a compartment therein, facilitation construction.

WO 2005/093315 A1

GM, KE, LS, MW, MZ, NA, SD, SL, SZ, TZ, UG, ZM, ZW), Eurasian (AM, AZ, BY, KG, KZ, MD, RU, TJ, TM), European (AT, BE, BG, CH, CY, CZ, DE, DK, EE, ES, FI, FR, GB, GR, HU, IE, IS, IT, LT, LU, MC, NL, PL, PT, RO, SE, SI, SK, TR), OAPI (BF, BJ, CF, CG, CI, CM, GA, GN, GQ, GW, ML, MR, NE, SN, TD, TG).

Published:

— *with international search report*

— *before the expiration of the time limit for amending the claims and to be republished in the event of receipt of amendments*

For two-letter codes and other abbreviations, refer to the "Guidance Notes on Codes and Abbreviations" appearing at the beginning of each regular issue of the PCT Gazette.