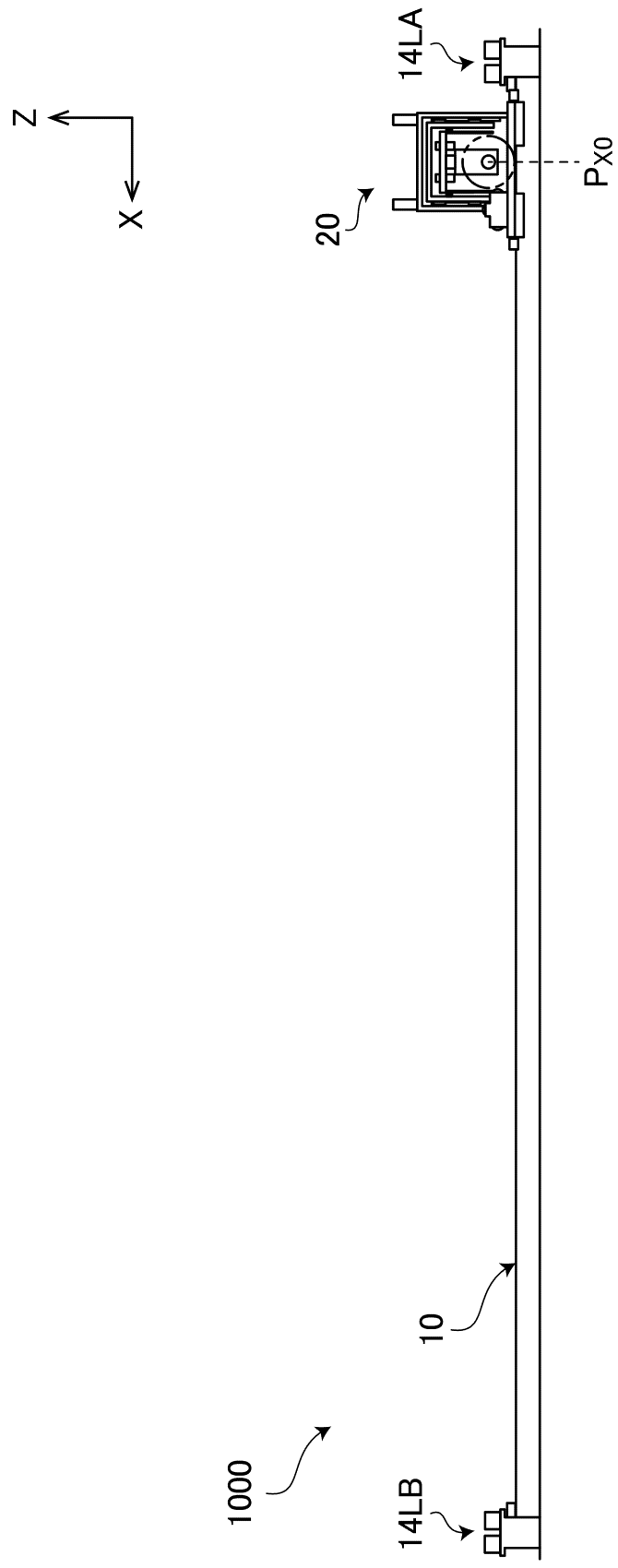

FIG. 1

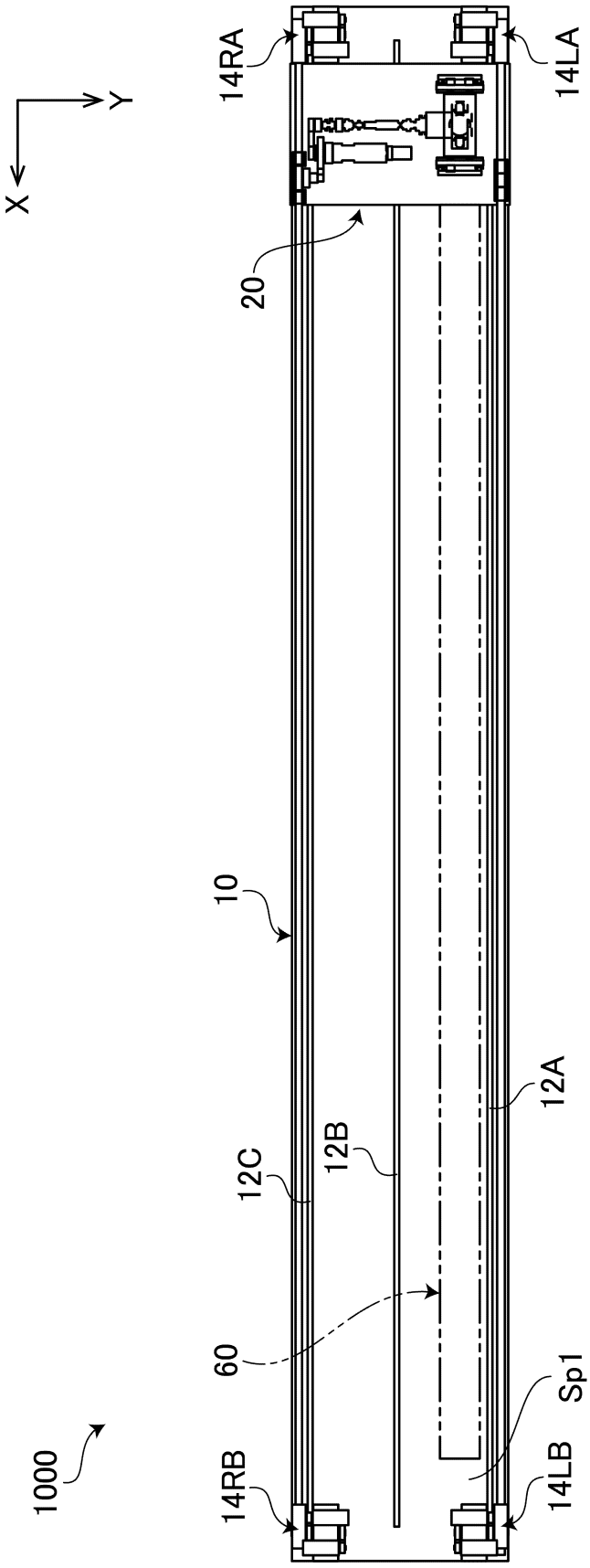

FIG. 2

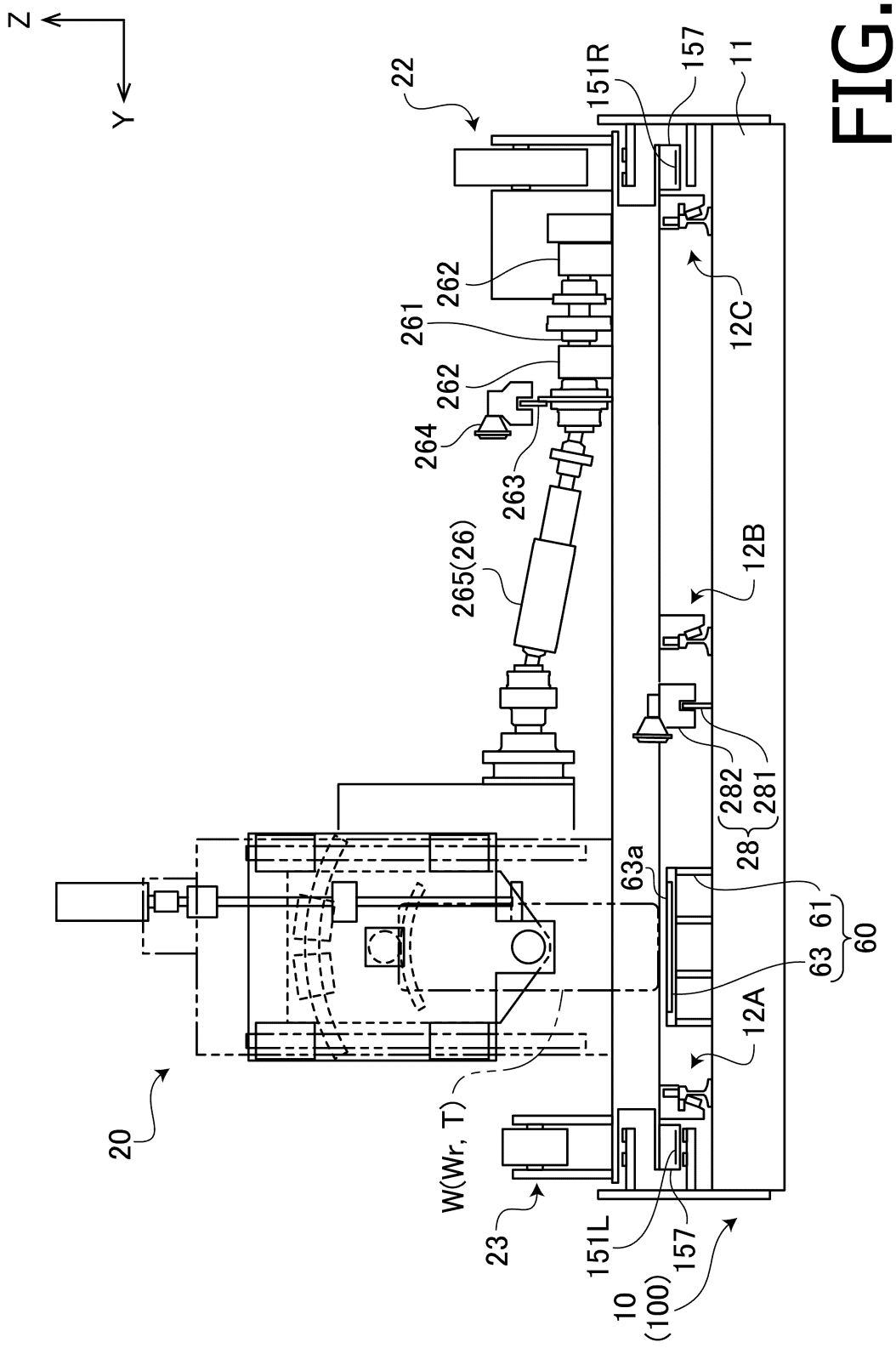
Z
Y
22
151R
157
11
262
261
262
264
263
265(26)
12C
12B
282
281
28
63a
61
60
63
12A
20
W(Wr, T)
23
151L
157
10
(100)

FIG. 3

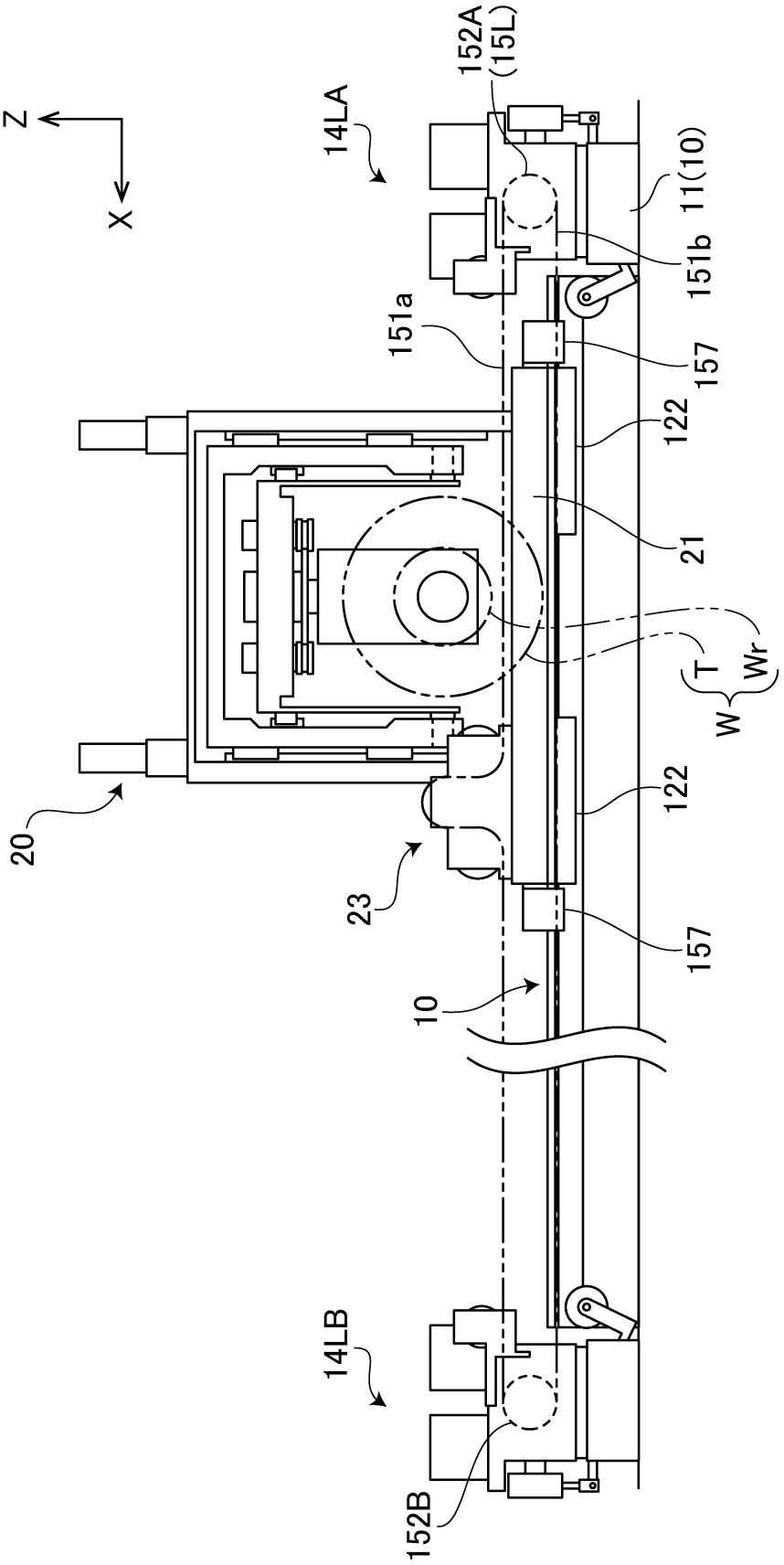
Z
X
14LA
152A
(15L)
11(10)
151b
151a
157
122
21
T
Wr
W
122
157
20
23
10
14LB
152B

FIG. 4

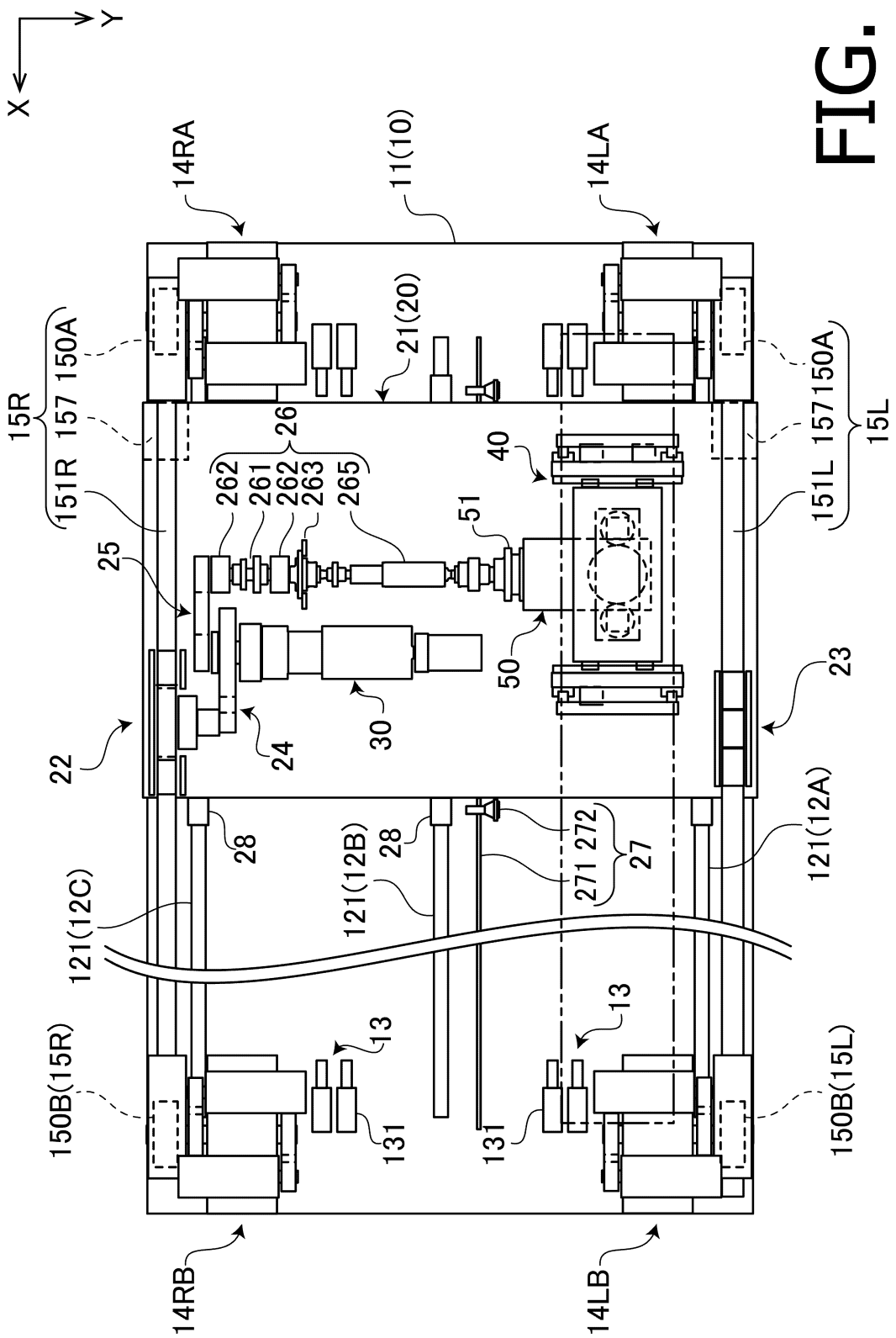
X
Y
14RA
11(10)
14LA
21(20)
15R
157
150A
151R
26
262
261
262
263
265
40
51
25
50
30
24
22
23
151L
157
150A
15L
28
28
121(12B)
271
272
27
121(12A)
121(12C)
13
13
131
131
150B(15R)
150B(15L)
14RB
14LB

FIG. 5

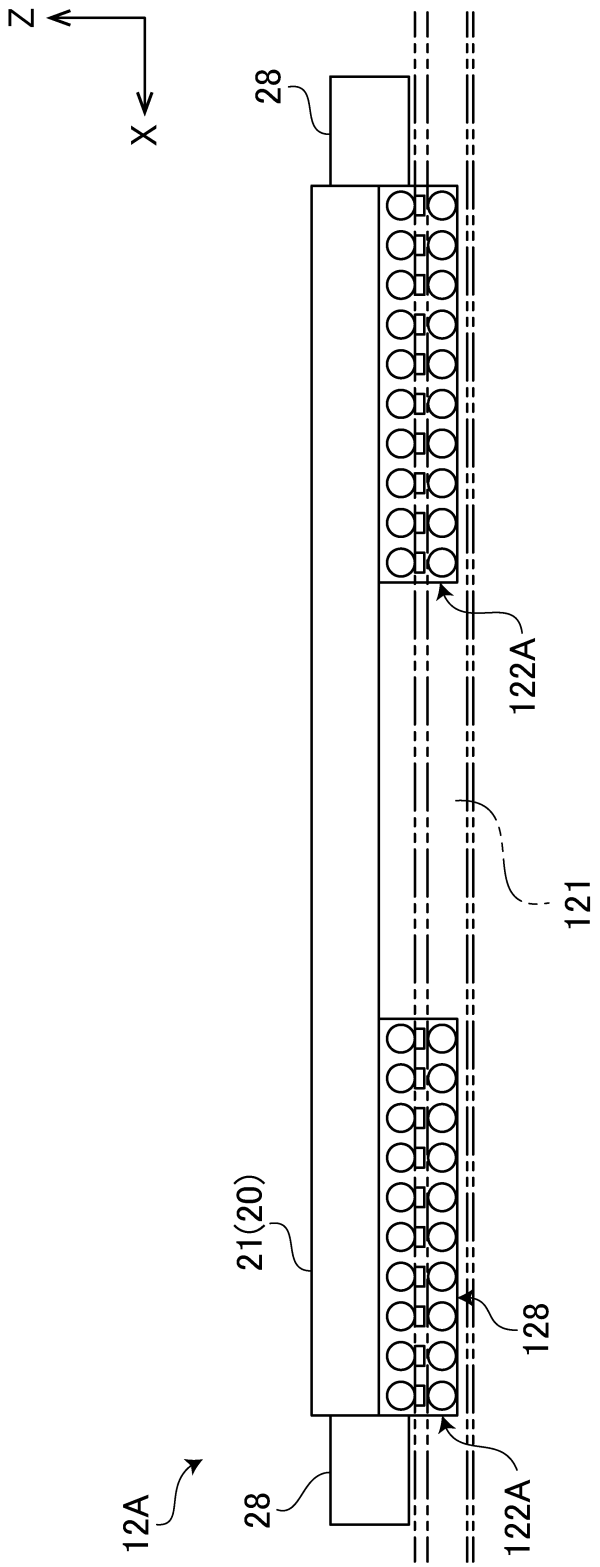

FIG. 6

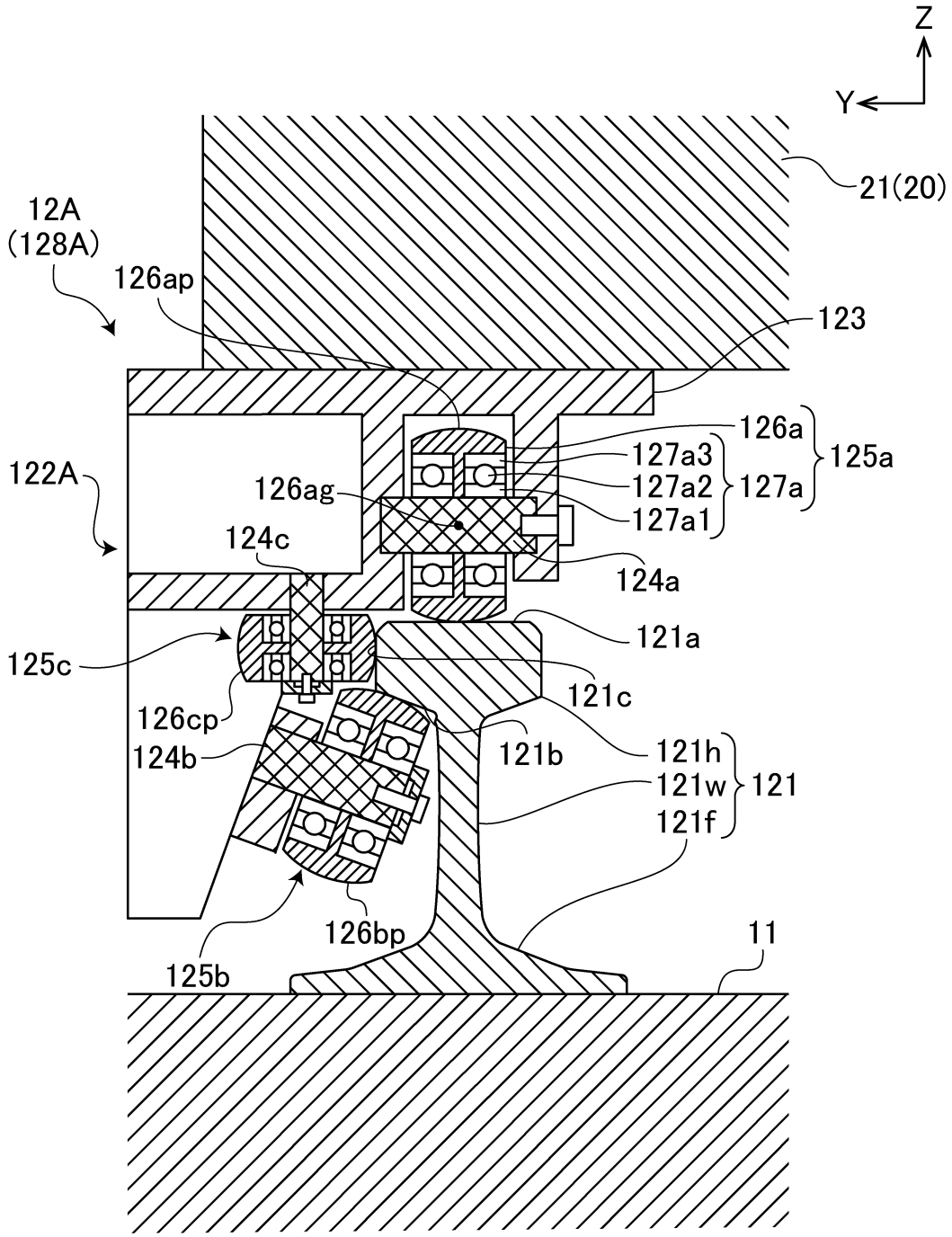
Z
Y
21(20)
12A
(128A)
126ap
123
126a
125a
127a3
127a2
127a
127a1
122A
126ag
124c
124a
121a
125c
121c
126cp
124b
121b
121h
121w
121
121f
126bp
11
125b

FIG. 7

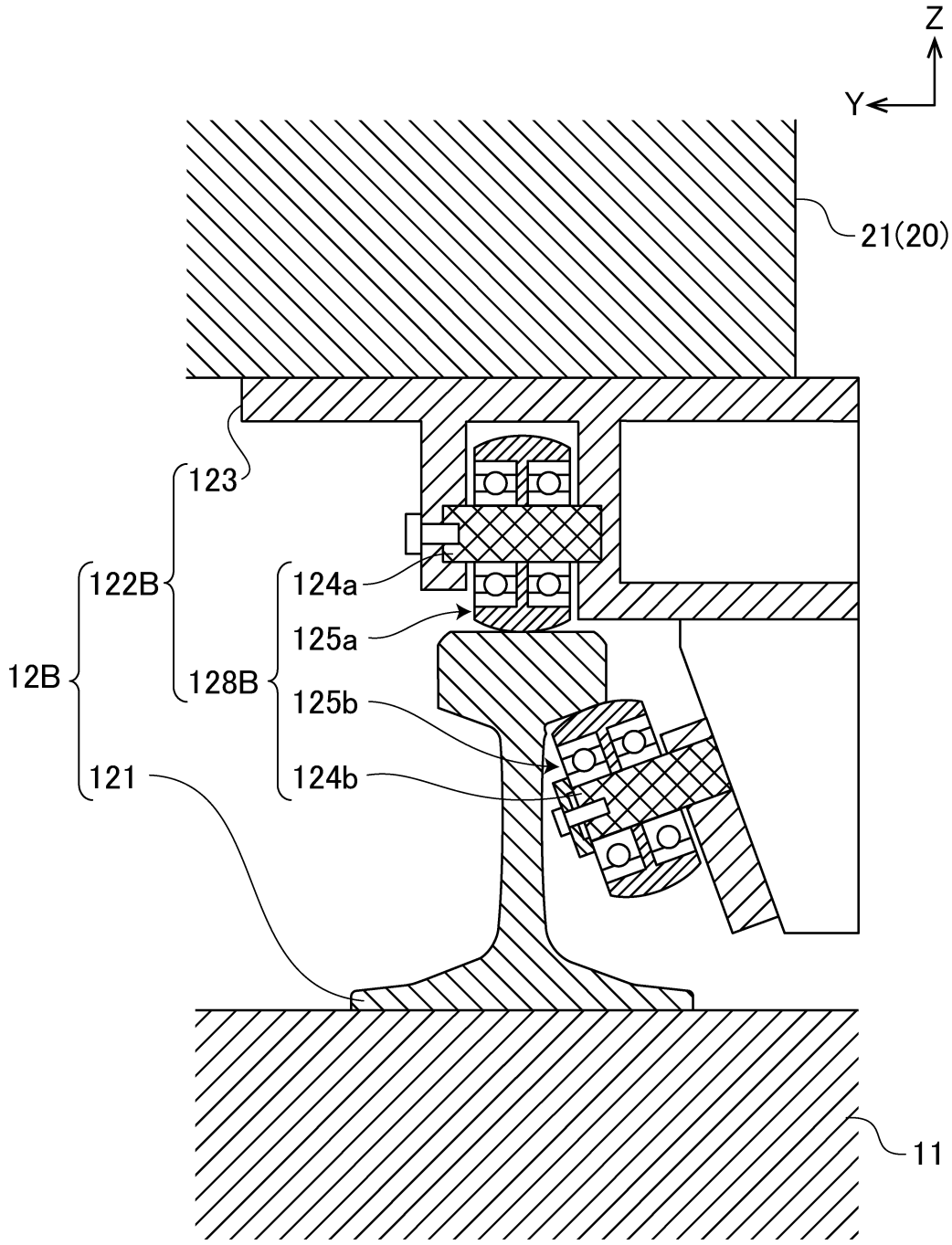

FIG. 8

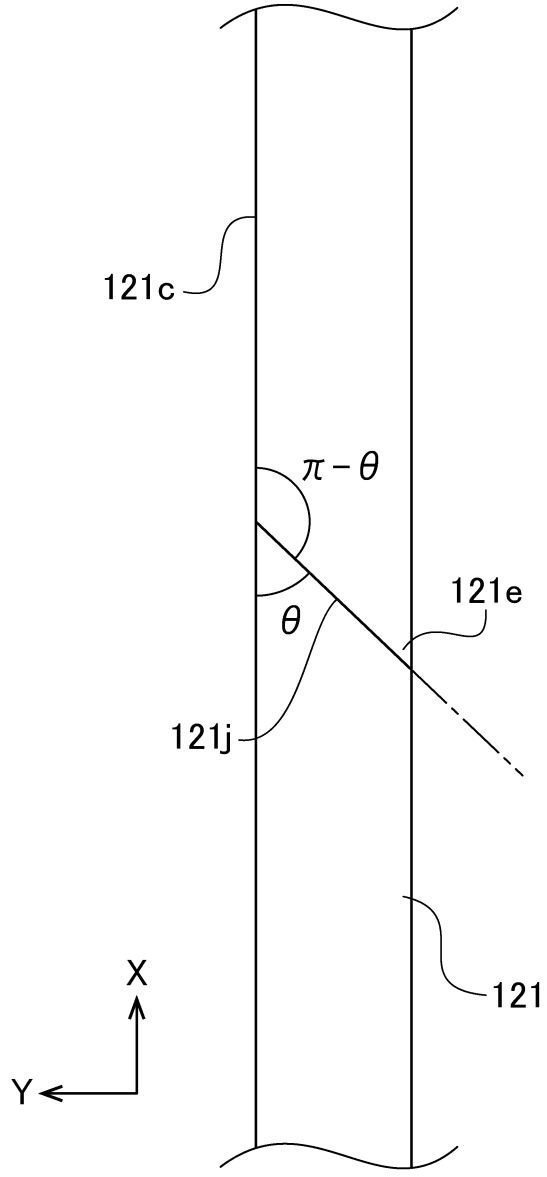

FIG. 9

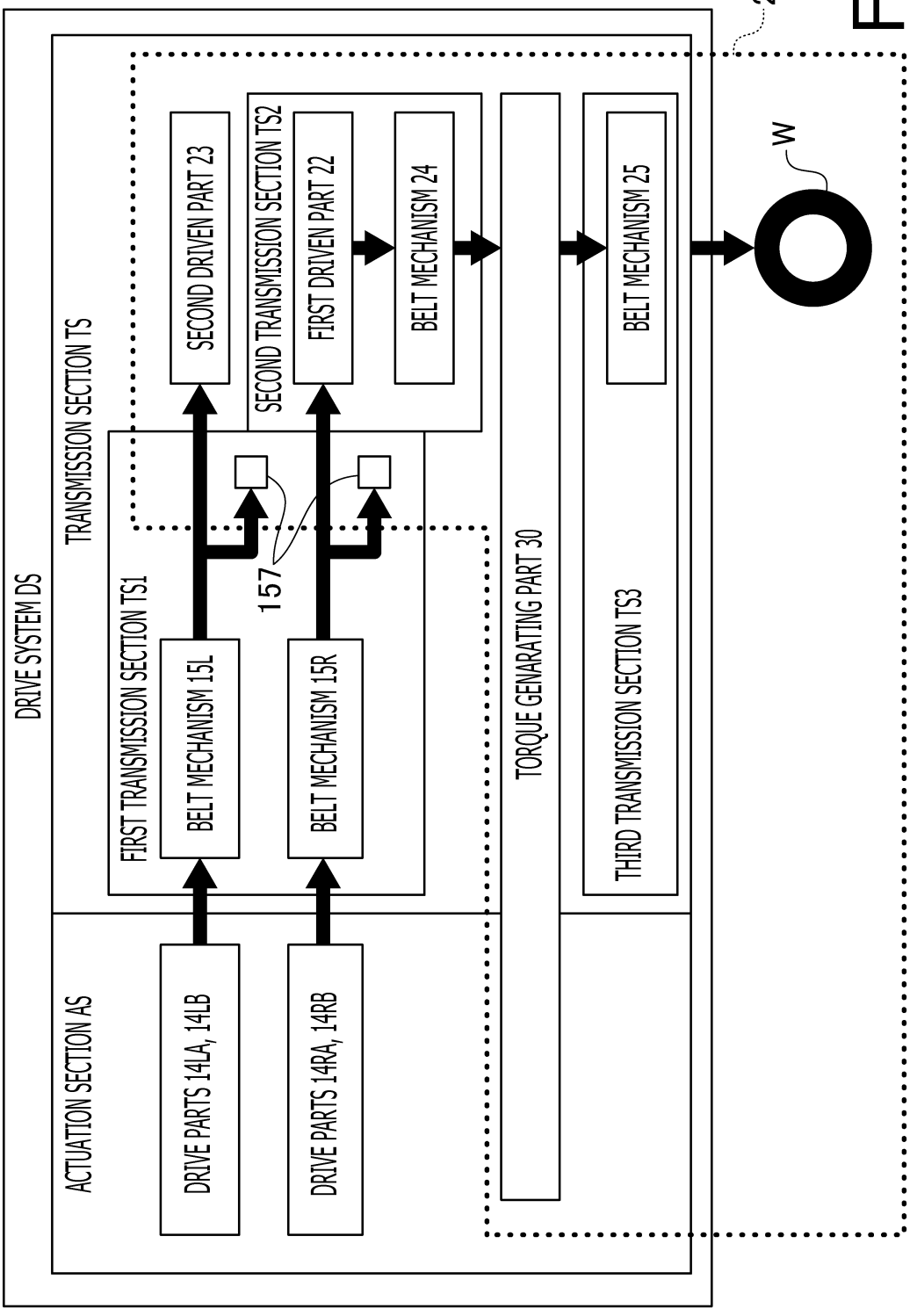
DRIVE SYSTEM DS
20
TRANSMISSION SECTION TS
ACTUATION SECTION AS
DRIVE PARTS 14LA, 14LB
DRIVE PARTS 14RA, 14RB
FIRST TRANSMISSION SECTION TS1
BELT MECHANISM 15L
BELT MECHANISM 15R
157
SECOND TRANSMISSION SECTION TS2
SECOND DRIVEN PART 23
FIRST DRIVEN PART 22
BELT MECHANISM 24
TORQUE GENARATING PART 30
THIRD TRANSMISSION SECTION TS3
BELT MECHANISM 25
W

FIG. 10

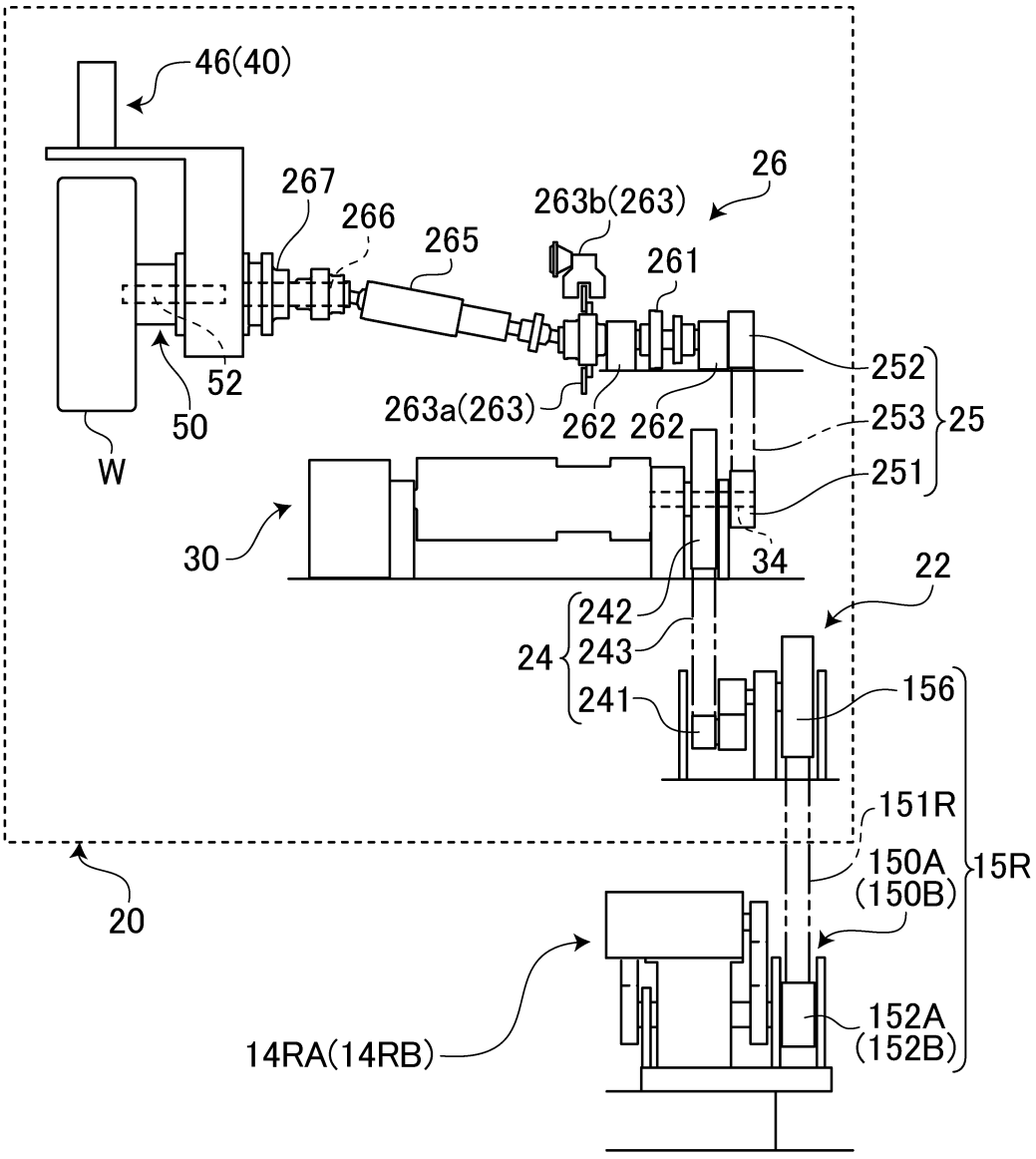
46(40)
267
266
265
263b(263)
26
261
252
253
25
251
263a(263)
262
262
52
50
W
30
34
22
242
24
243
241
156
151R
150A
(150B)
15R
20
14RA(14RB)
152A
(152B)

FIG. 11

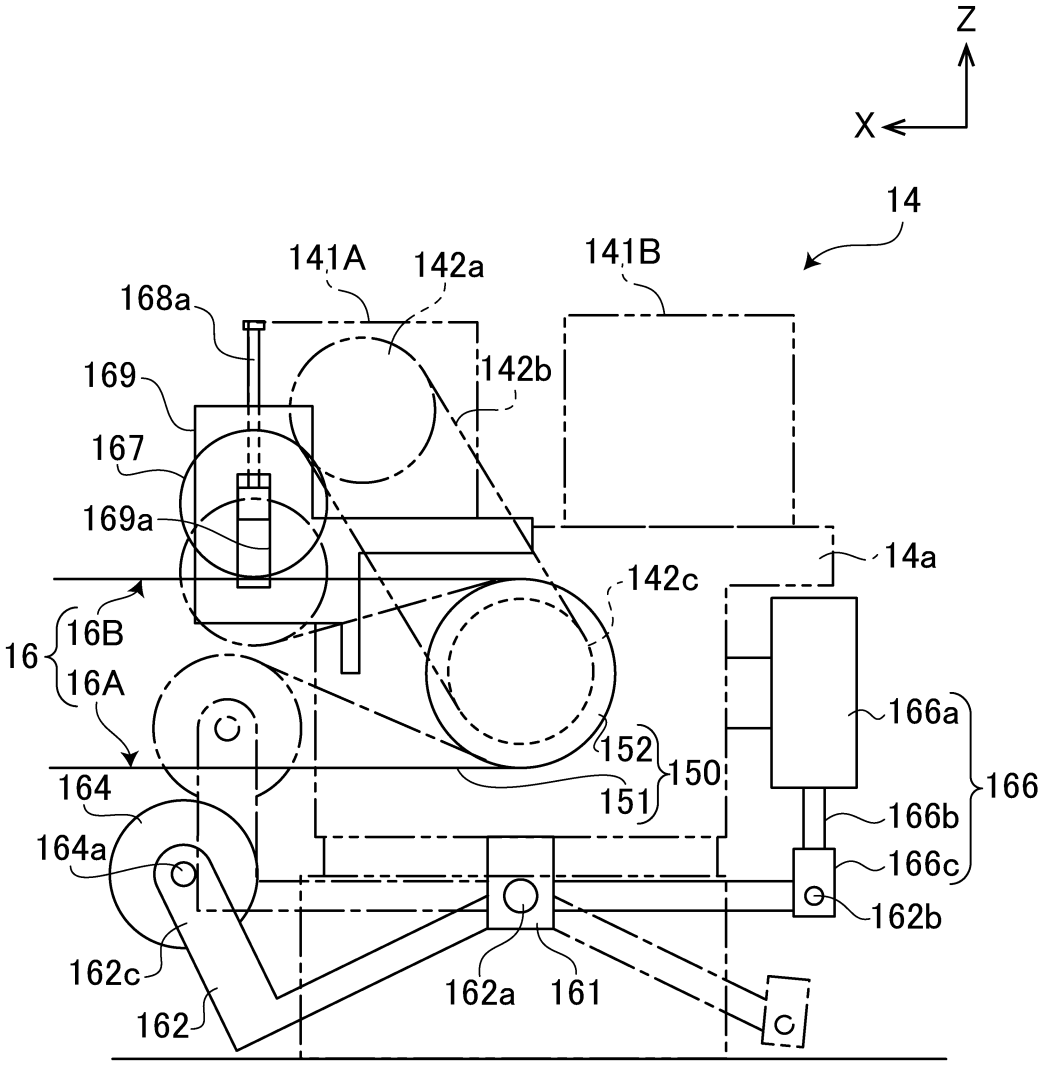
Z
X
14
141A
142a
141B
168a
142b
169
167
169a
14a
142c
16
16B
16A
166a
152
150
151
166
164
166b
164a
166c
162b
162c
162a
161
162

FIG. 12

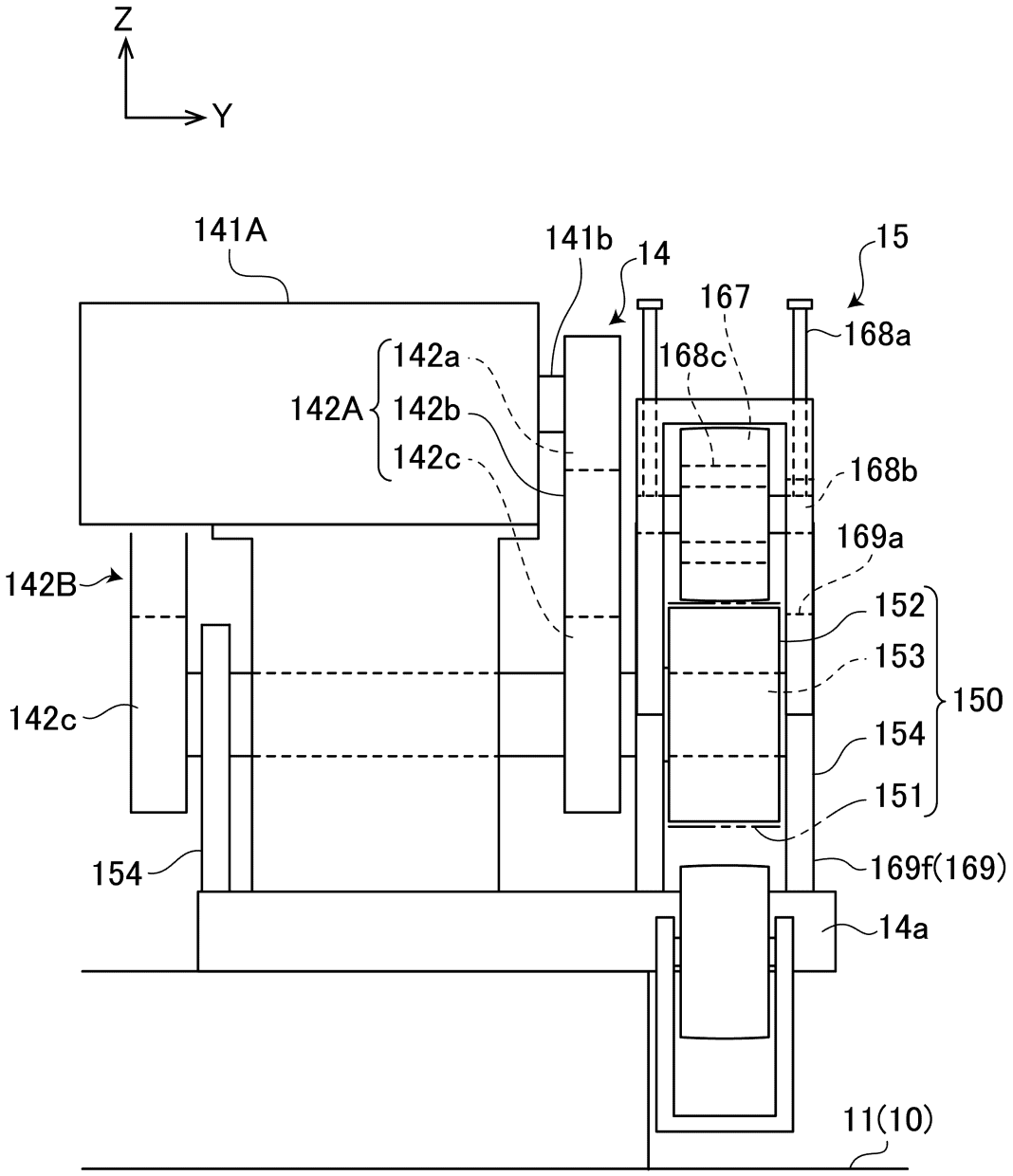
Z
Y
141A
141b
14
15
167
168a
168c
142a
142A
142b
142c
168b
169a
142B
152
153
150
142c
154
151
154
169f(169)
14a
11(10)

FIG. 13

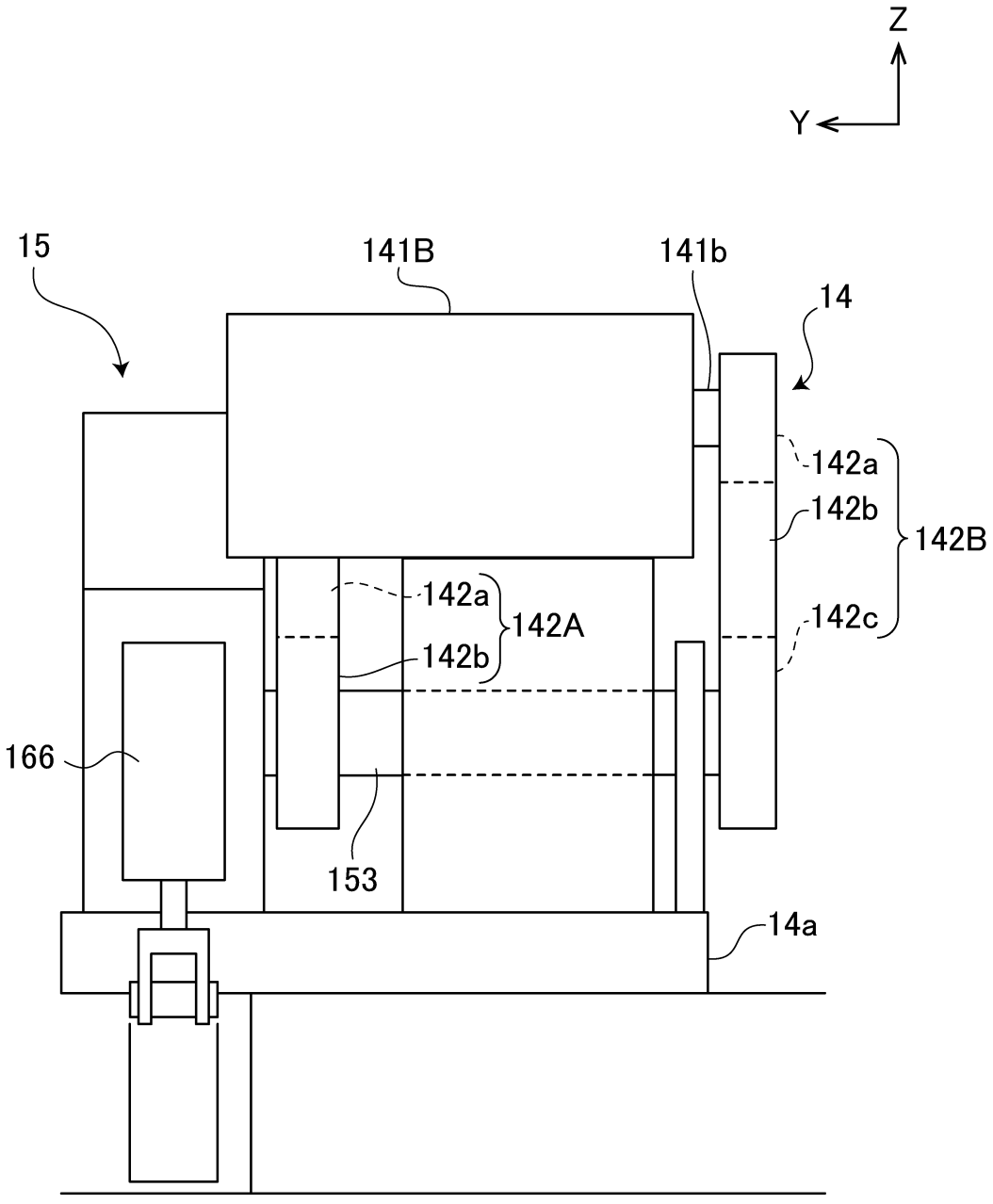
Z
Y
15
141B
141b
14
142a
142b
142B
142a
142A
142b
142c
166
153
14a

FIG. 14

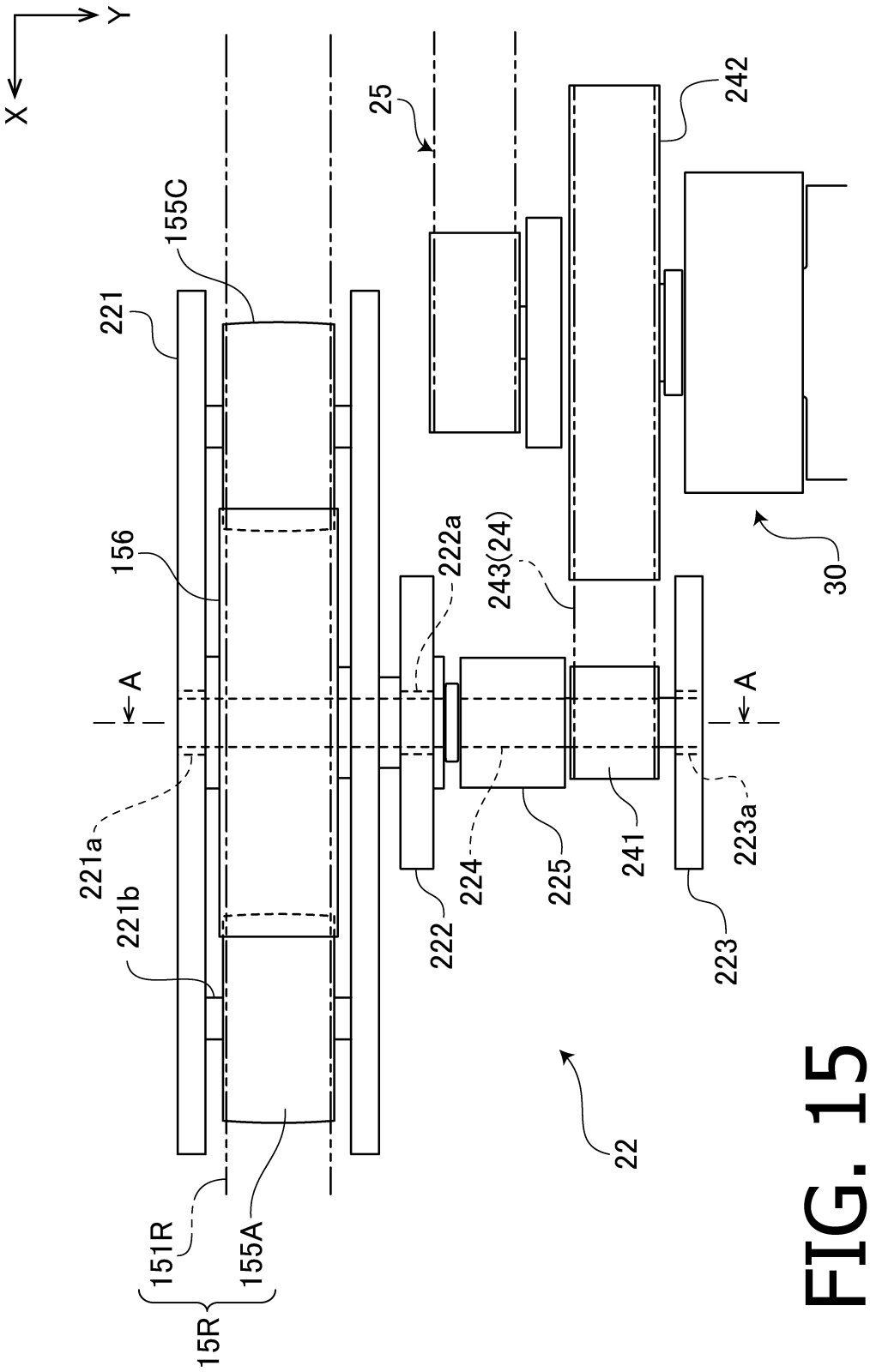
Y
X
25
242
155C
221
156
222a
243(24)
30
A
A
221a
221b
224
225
241
223a
222
223
22
151R
155A
15R

FIG. 15

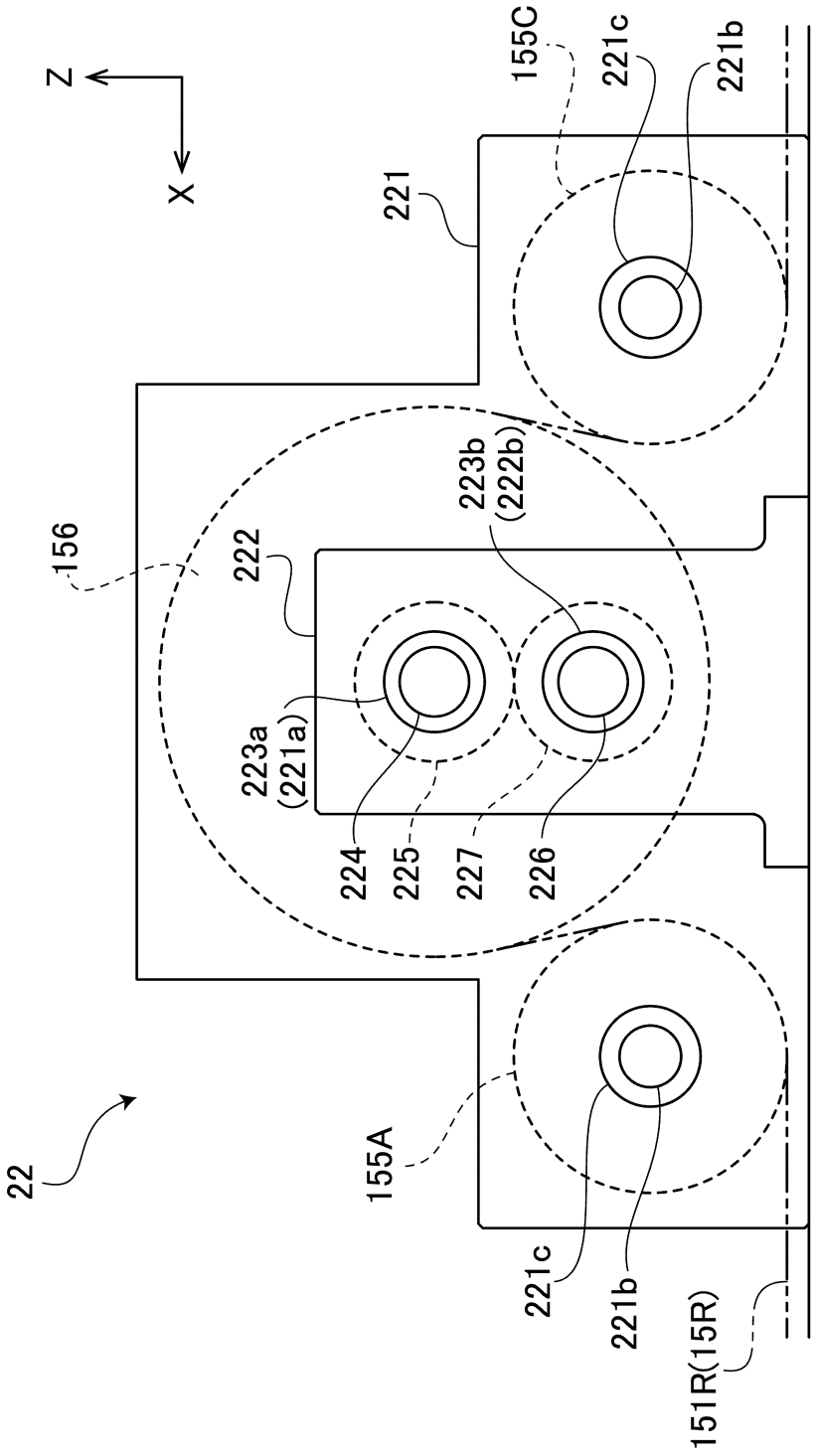
Z
X
22
155A
151R(15R)
221c
221b
221
155C
221c
221b
156
222
223b
(222b)
223a
(221a)
224
225
227
226

FIG. 16

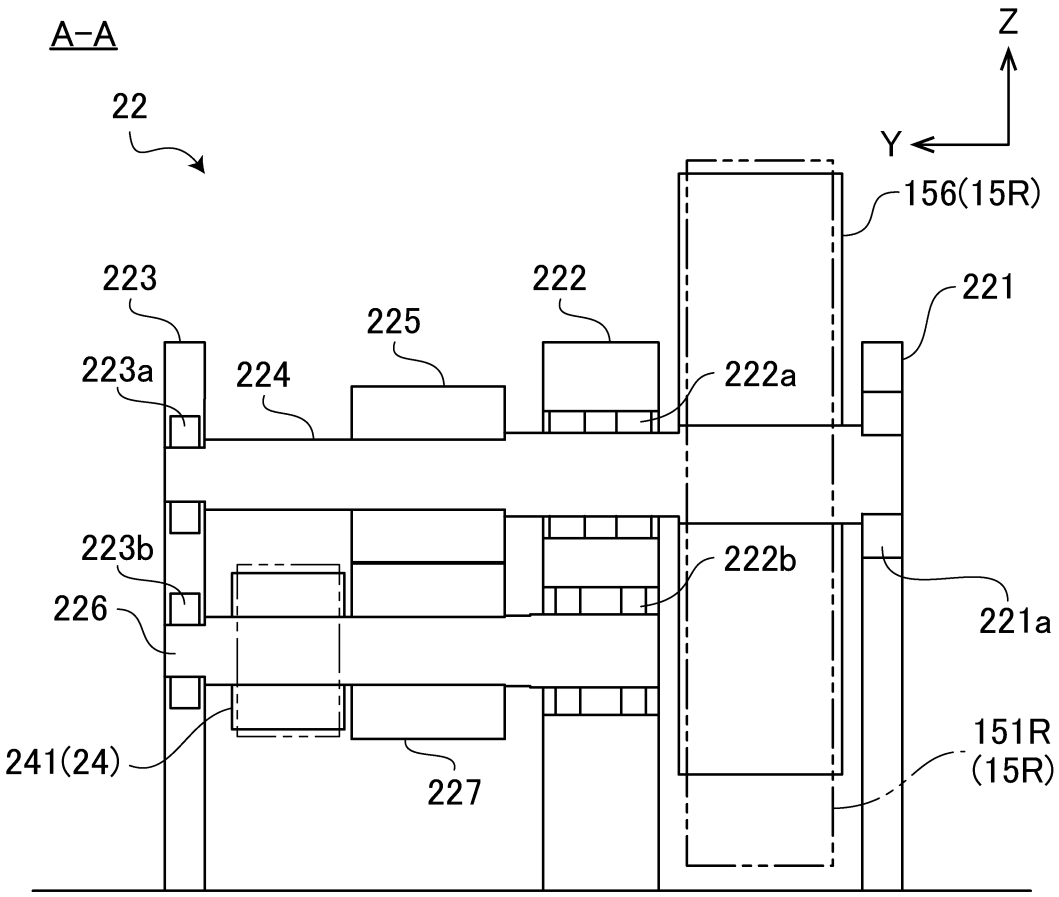
A-A
22
Z
Y
156(15R)
223
222
221
225
223a
224
222a
223b
222b
226
221a
151R
(15R)
241(24)
227

FIG. 17

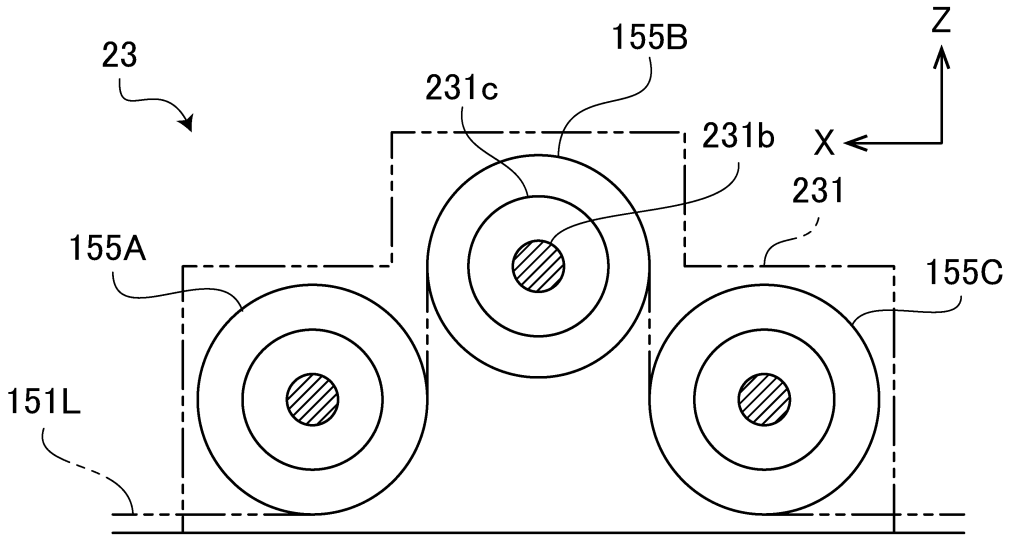
23
155B
Z
231c
231b
X
231
155A
155C
151L

FIG. 18

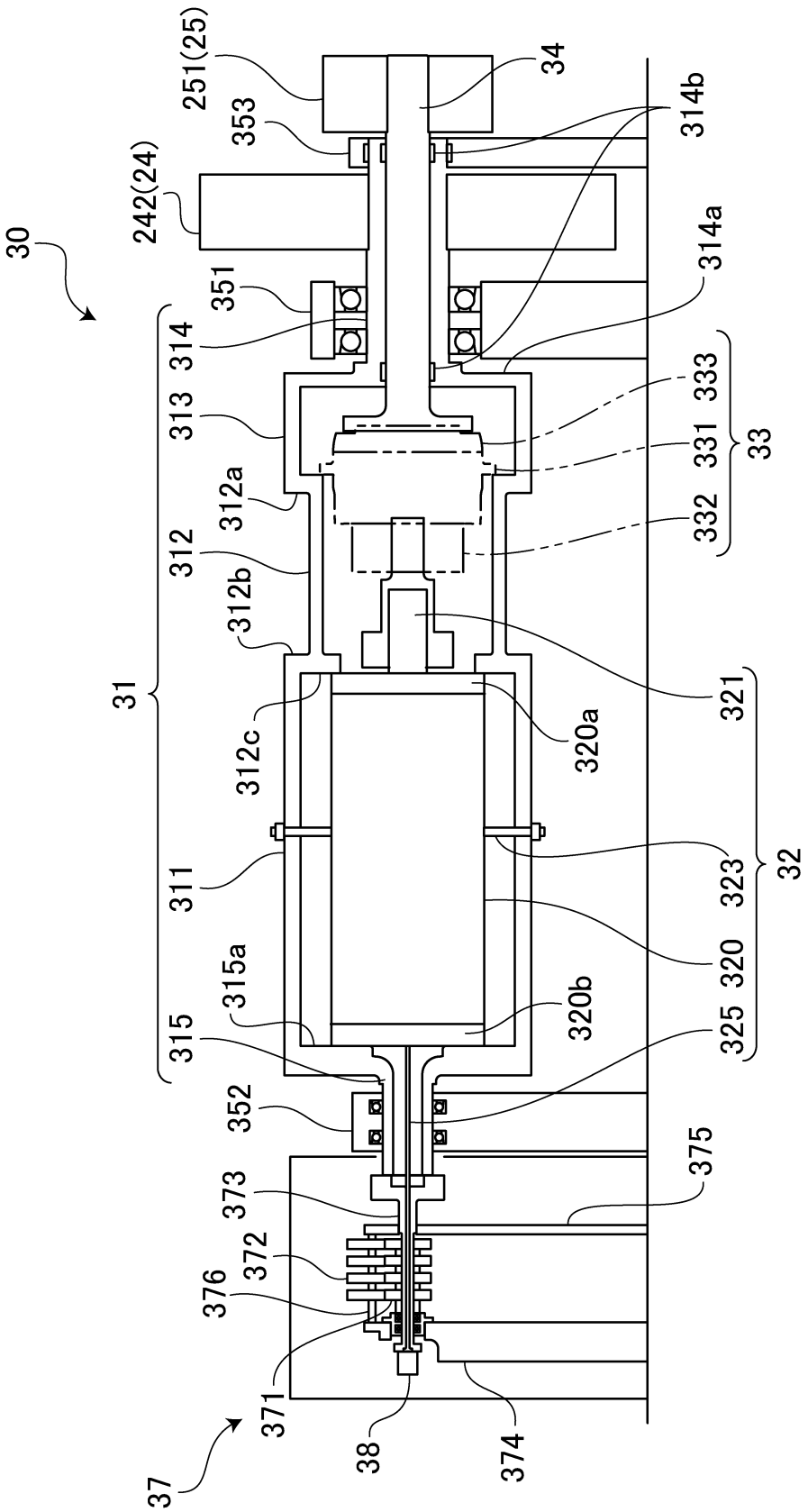
30
251(25)
353
242(24)
351
314
313
312a
312
312b
31
312c
311
315a
315
352
373
372
376
371
38
37
374
375
34
314b
314a
333
331
33
332
321
320a
323
32
320
320b
325

FIG. 19

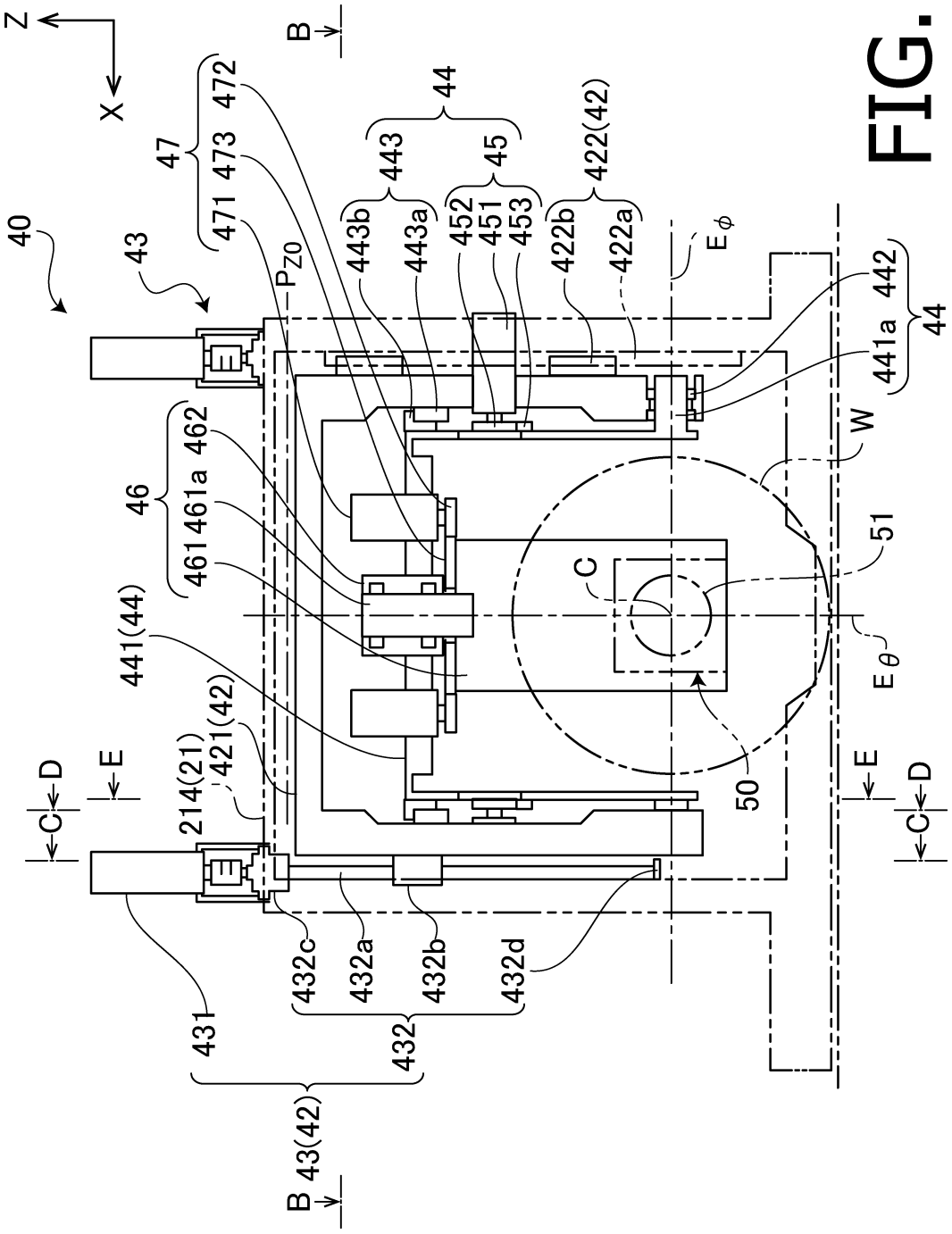
Z
X
B
40
43
47
472
473
471
44
443
443b
443a
45
452
451
453
422(42)
422b
422a
E_ϕ
P_{Z0}
442
441a
44
W
46
462
461a
461
441(44)
421(42)
214(21)
C
51
E_θ
50
C
D
E
E
C
D
431
432c
432a
432b
432d
432
B
43(42)

FIG. 20

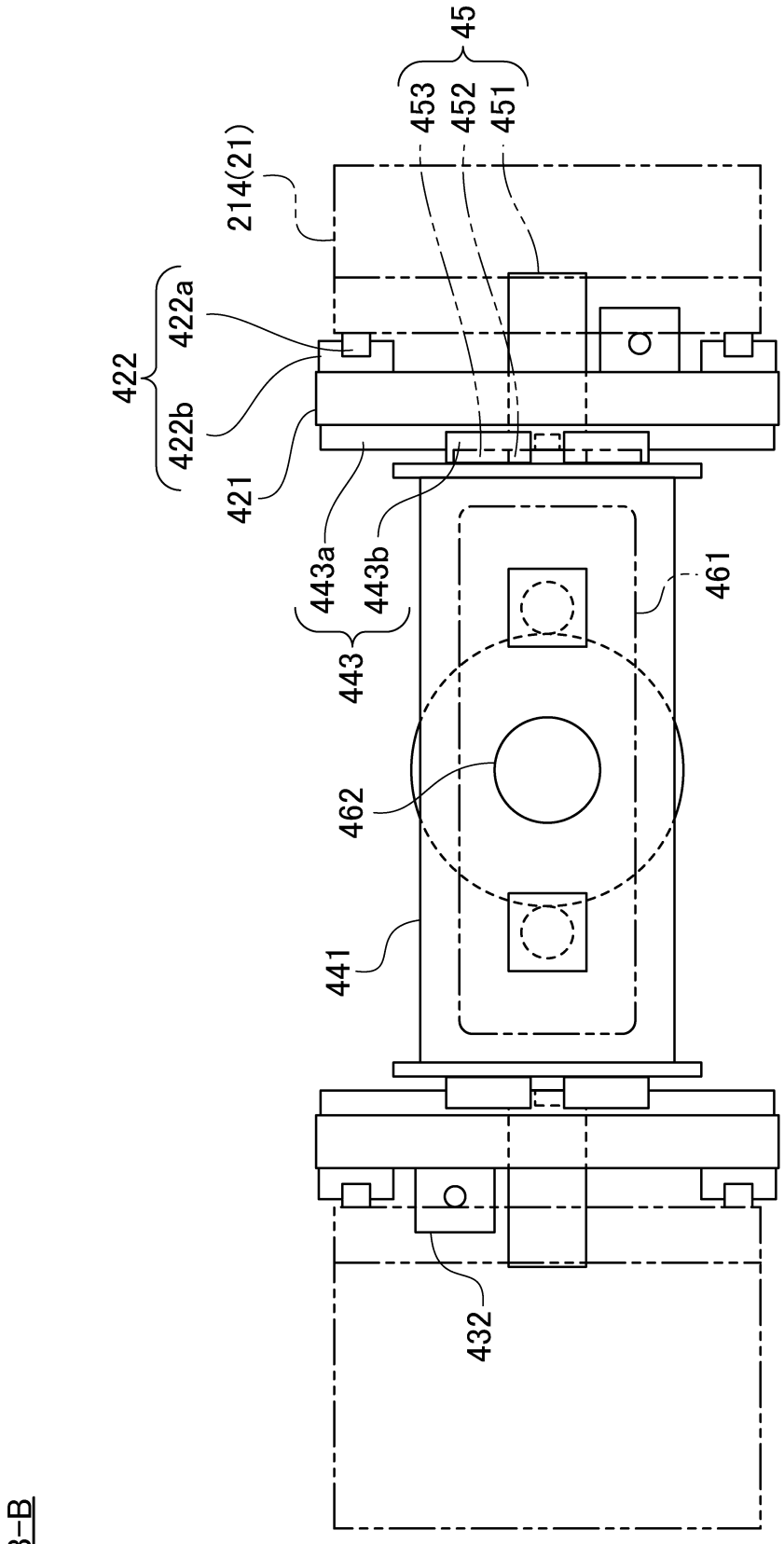
45
453
452
451
214(21)
422
422a
422b
421
443a
443b
443
461
462
441
432
B–B

FIG. 21

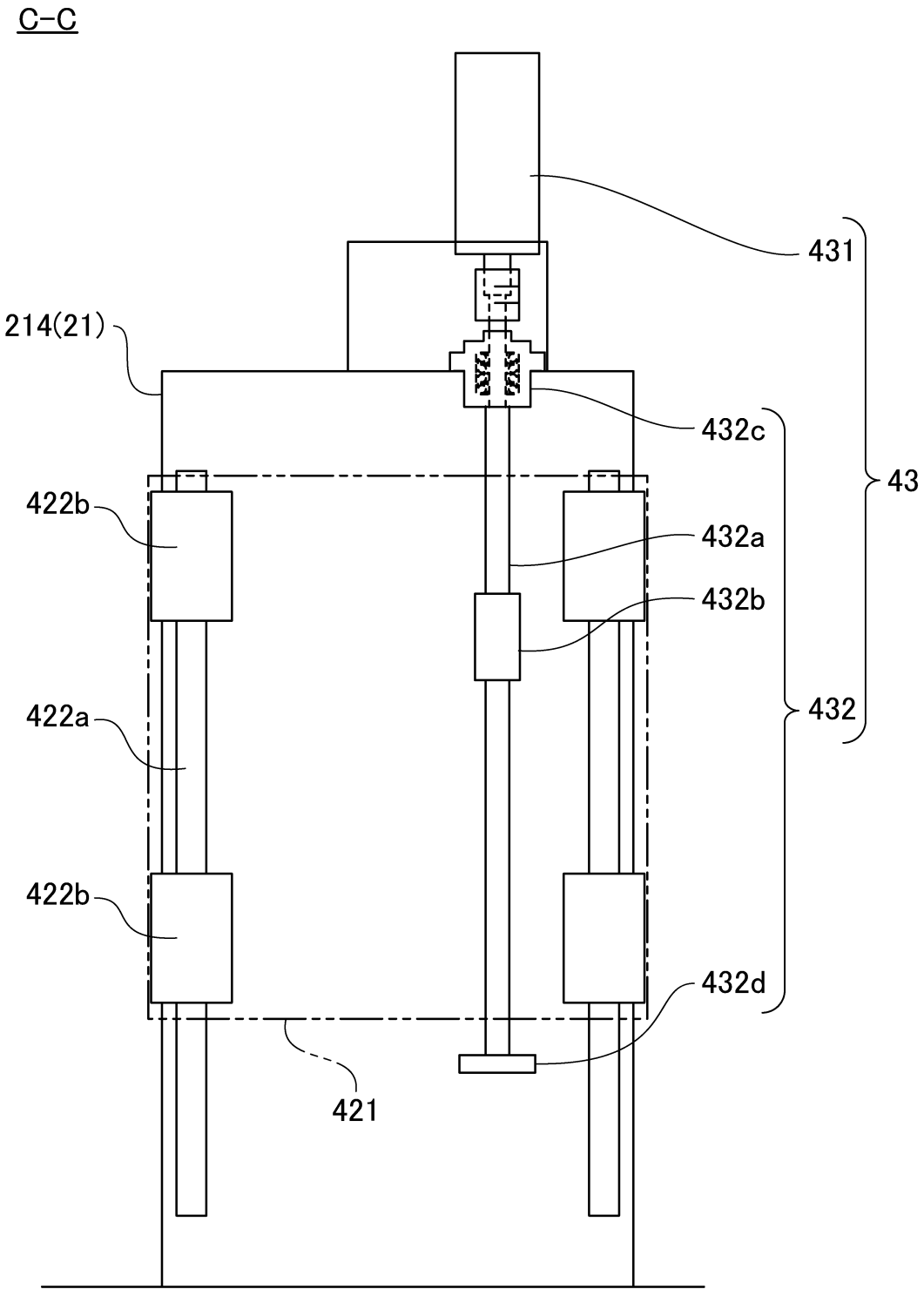

FIG. 22

D-D

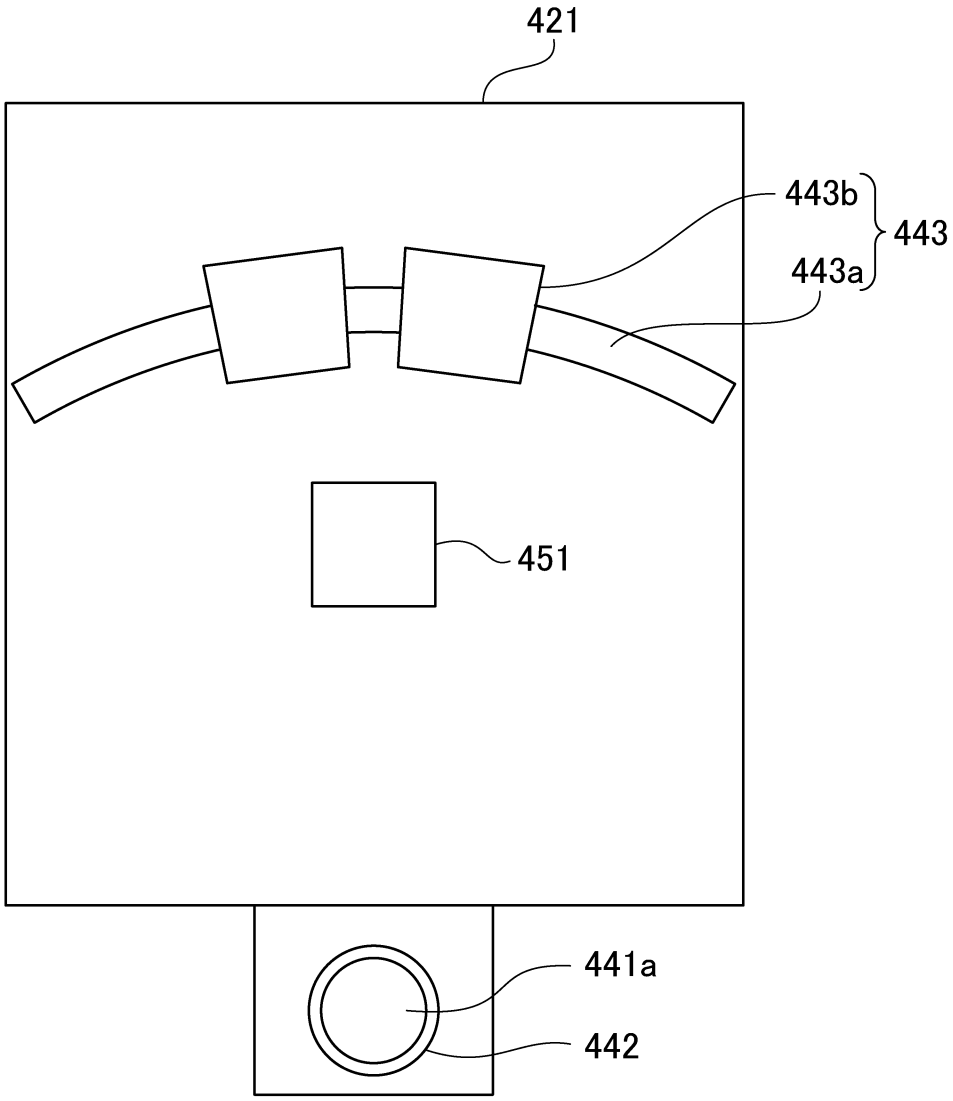

FIG. 23

E-E

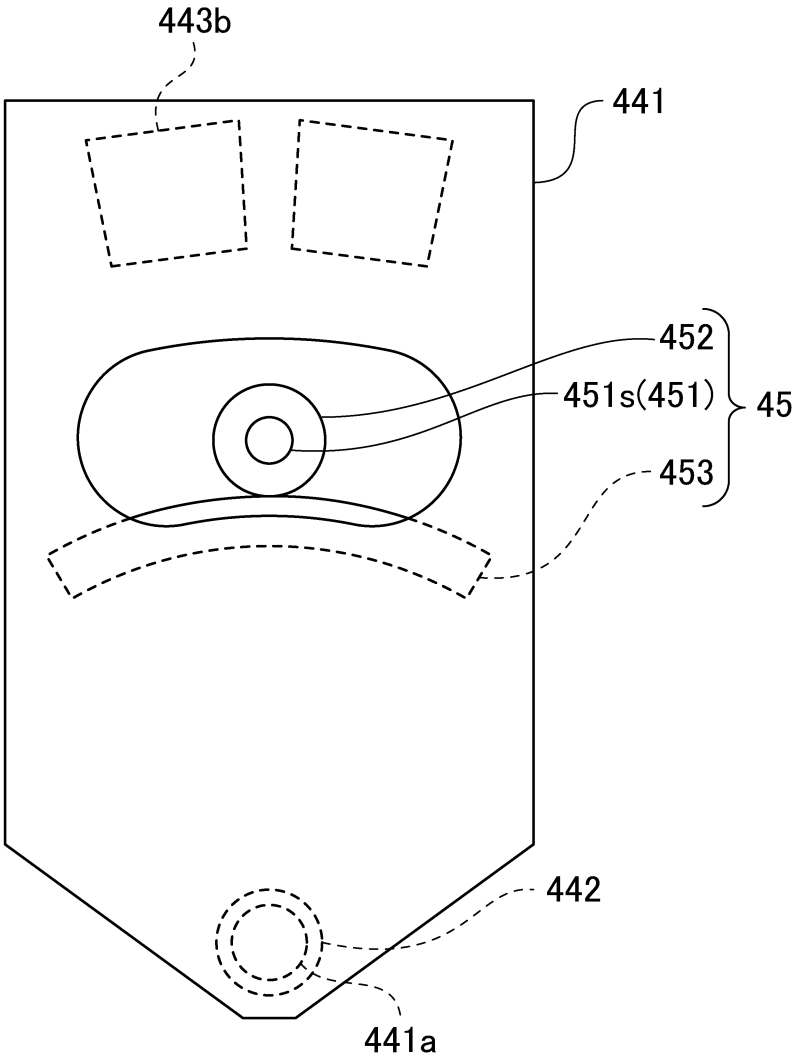

FIG. 24

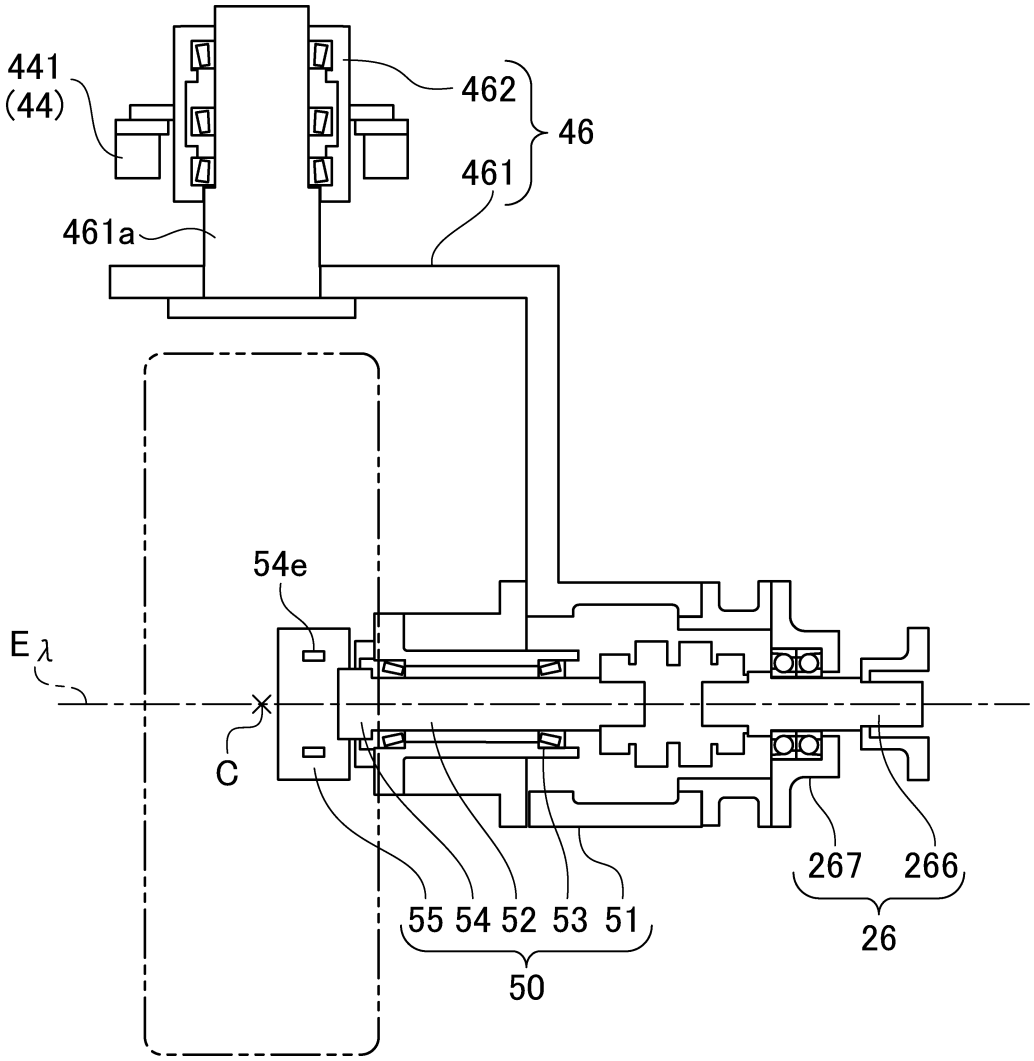

FIG. 25

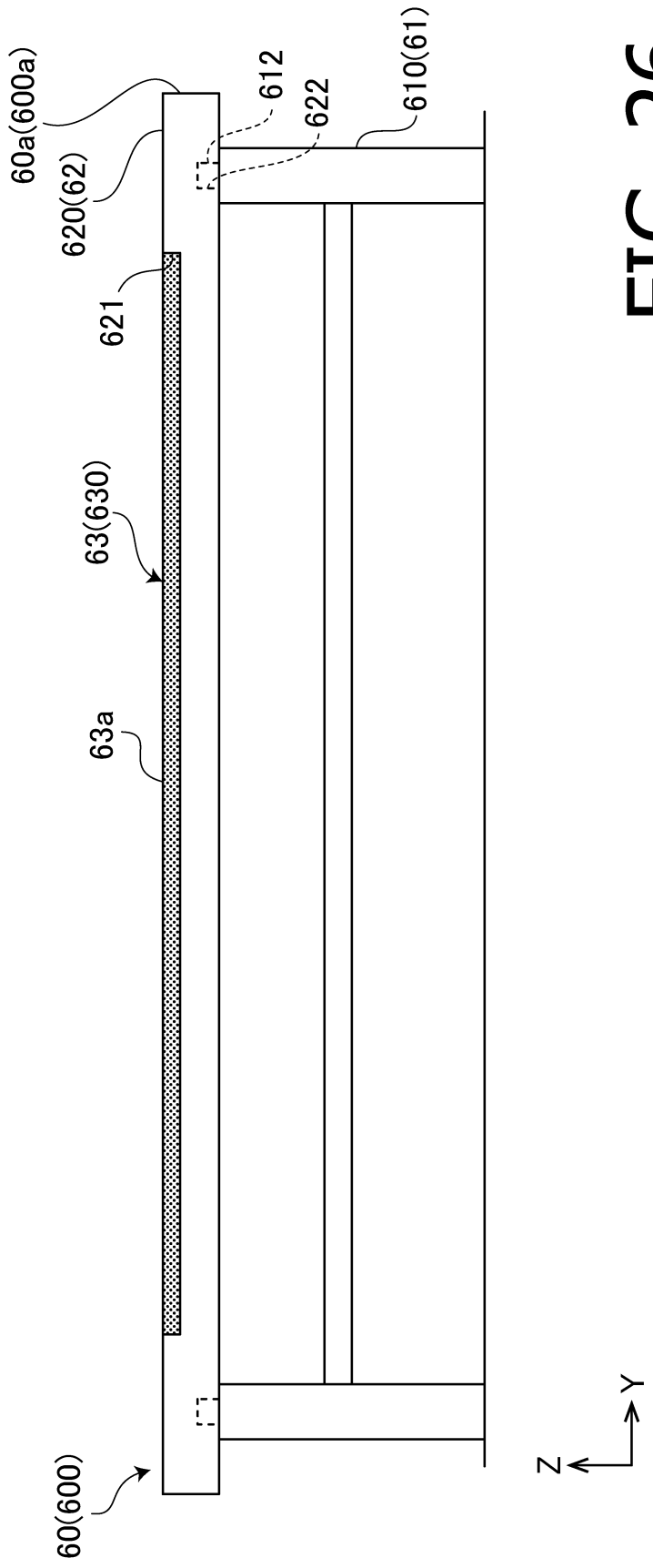

FIG. 26

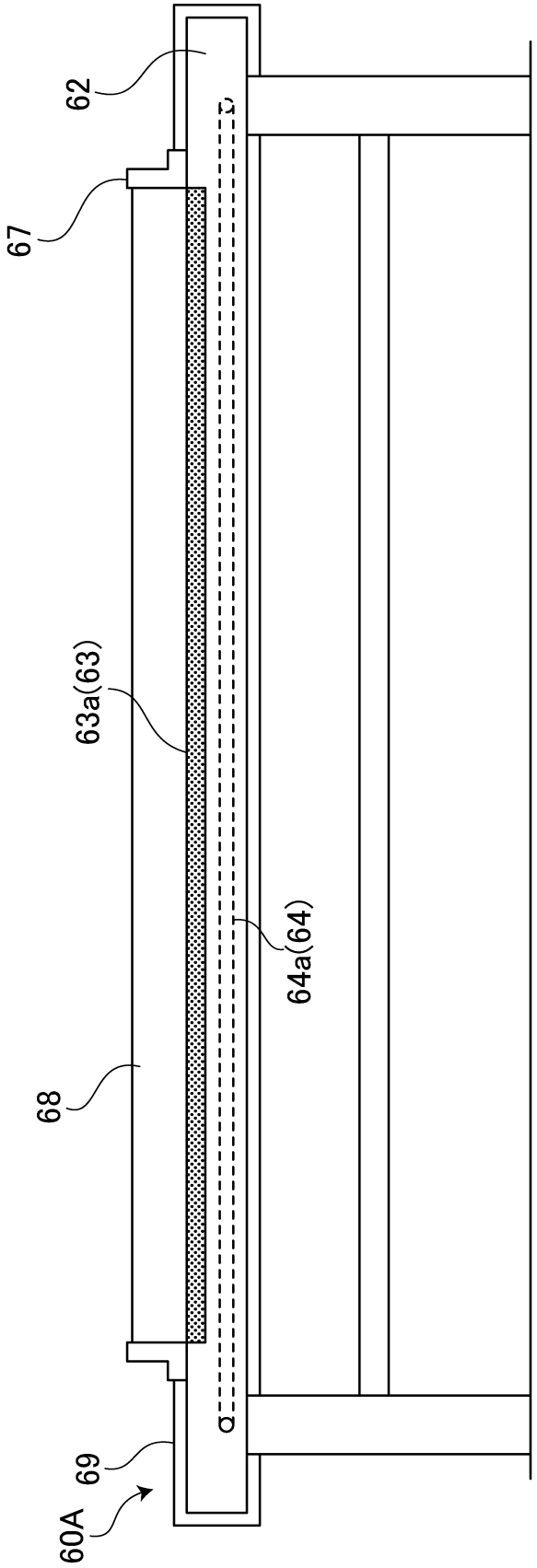

FIG. 27

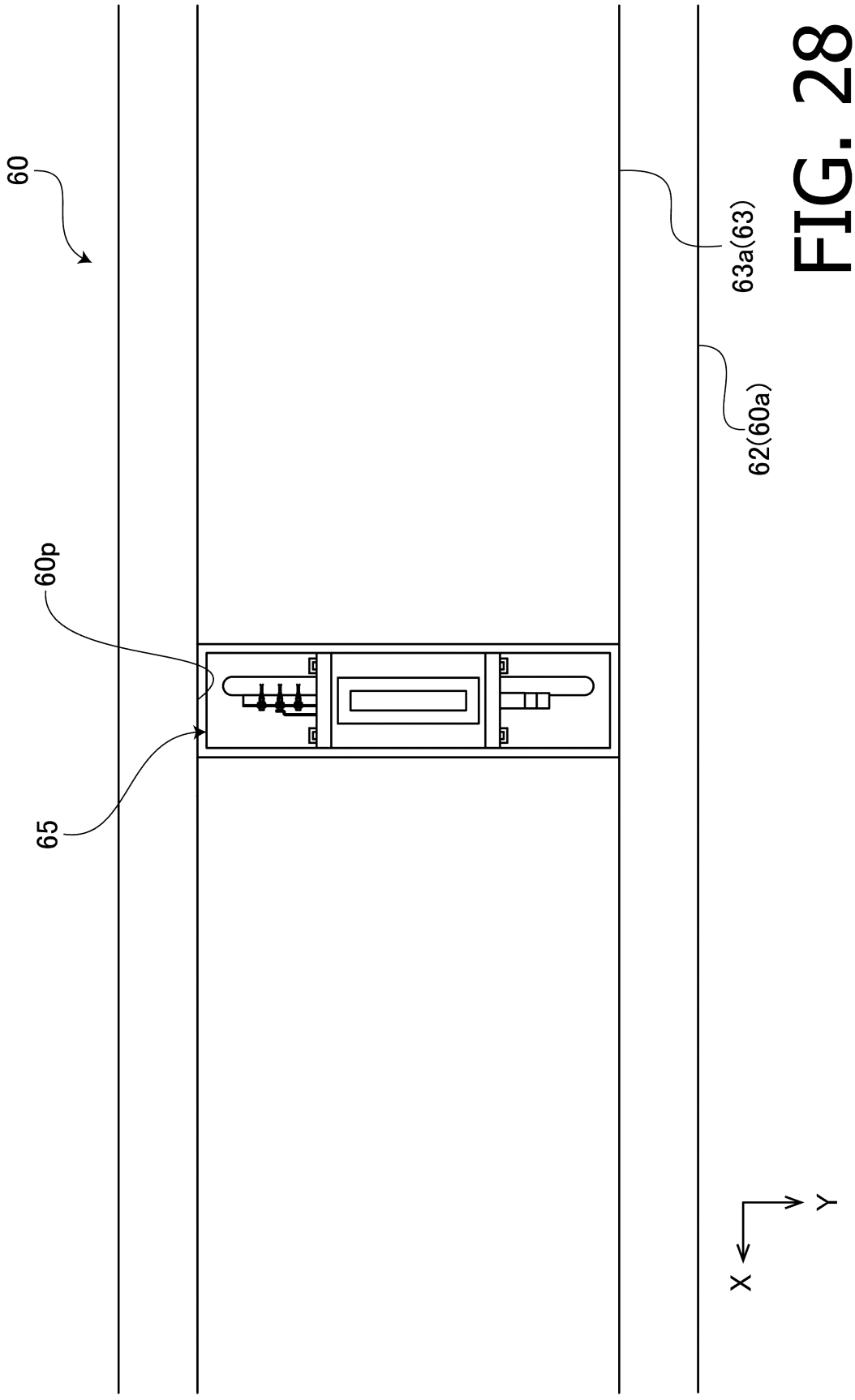

FIG. 28

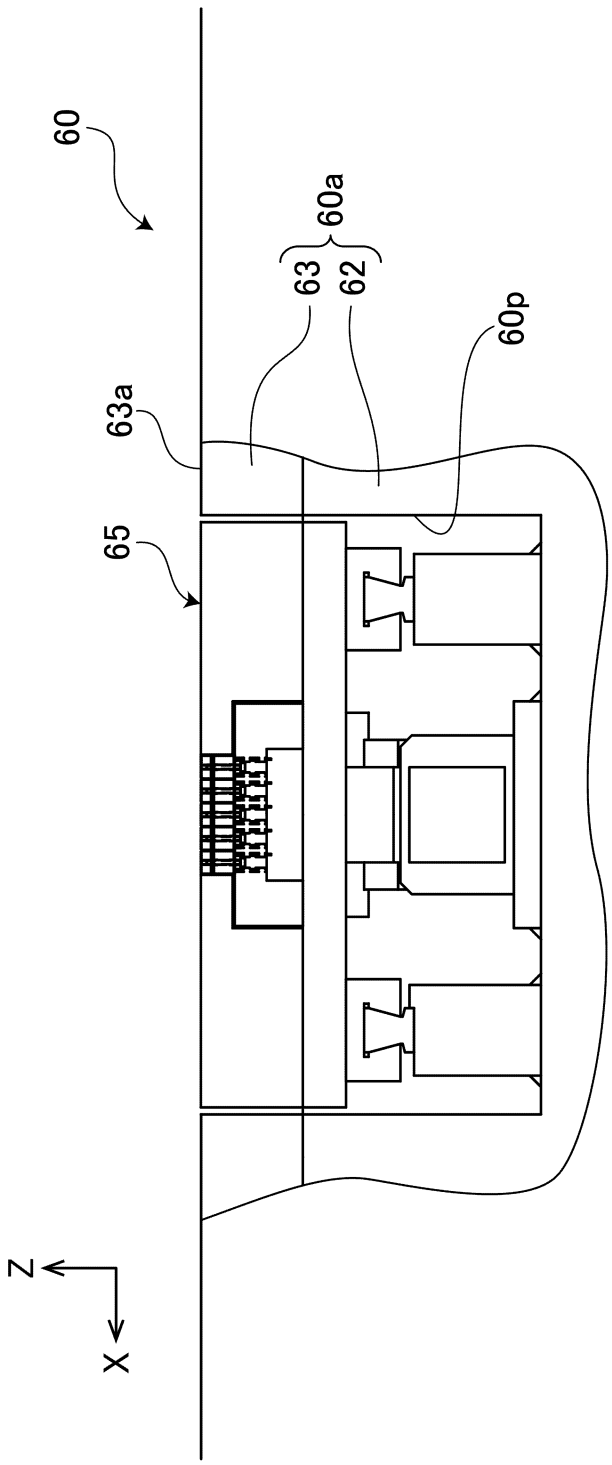

FIG. 29

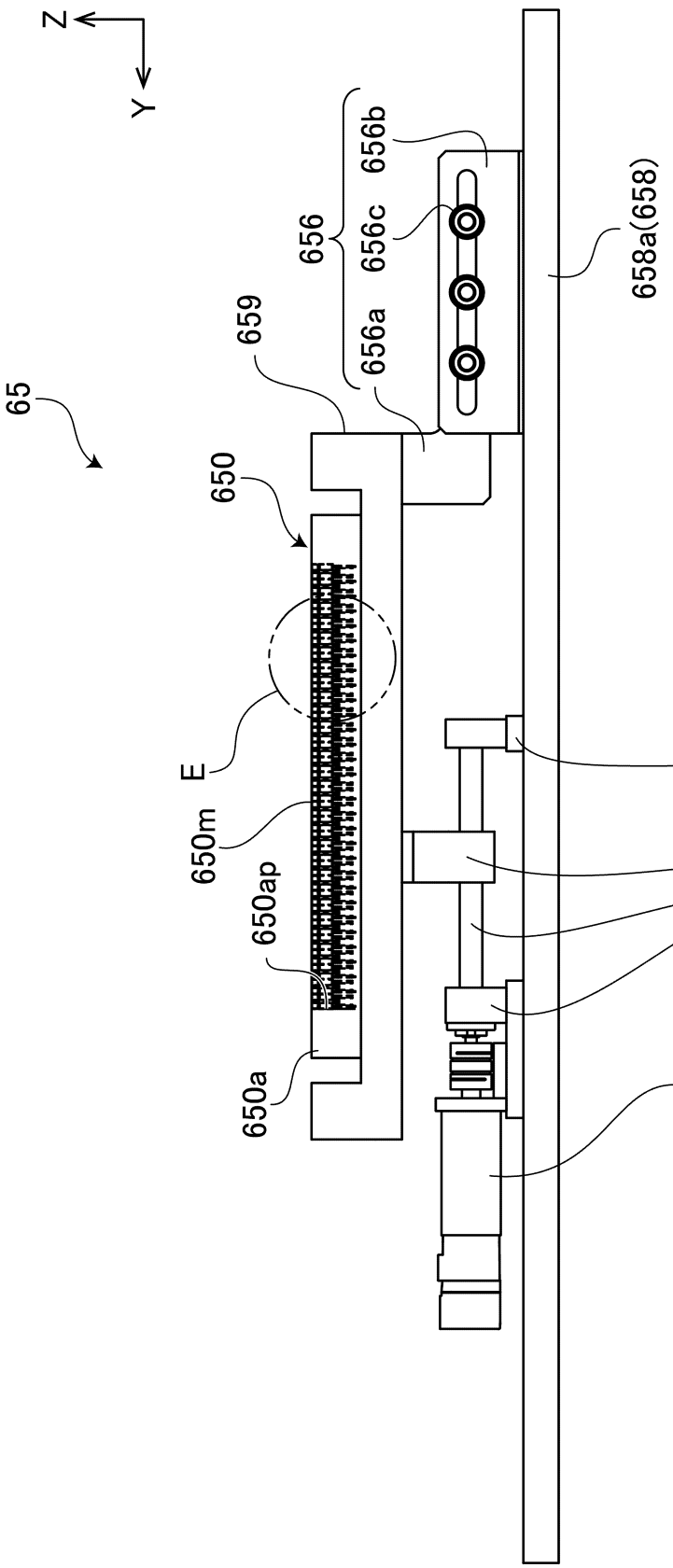
Z
Y
65
659
656
656b
656c
656a
658a(658)
650
E
650m
650ap
650a
655bc
655ba
655bb
655bd
655m
655b
655

FIG. 30

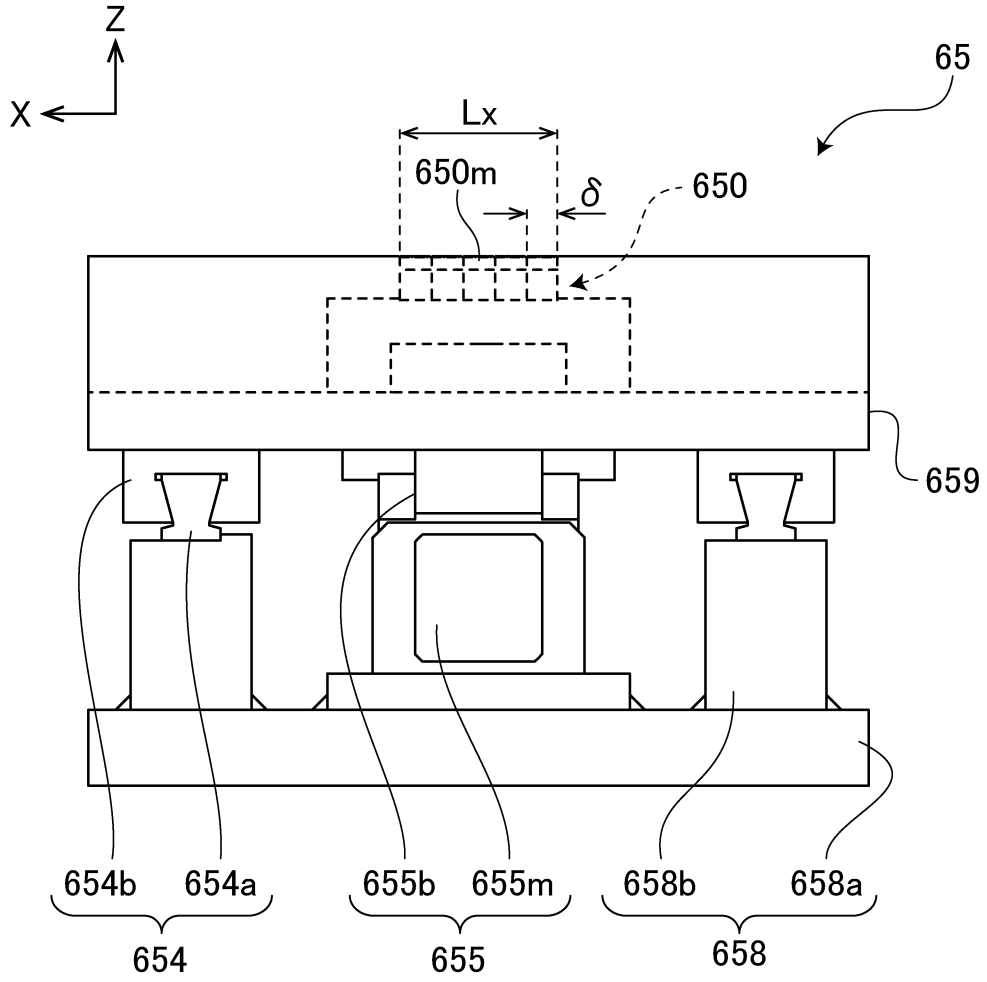
Z
X
65
Lx
650m
δ
650
659
654b
654a
655b
655m
658b
658a
654
655
658

FIG. 31

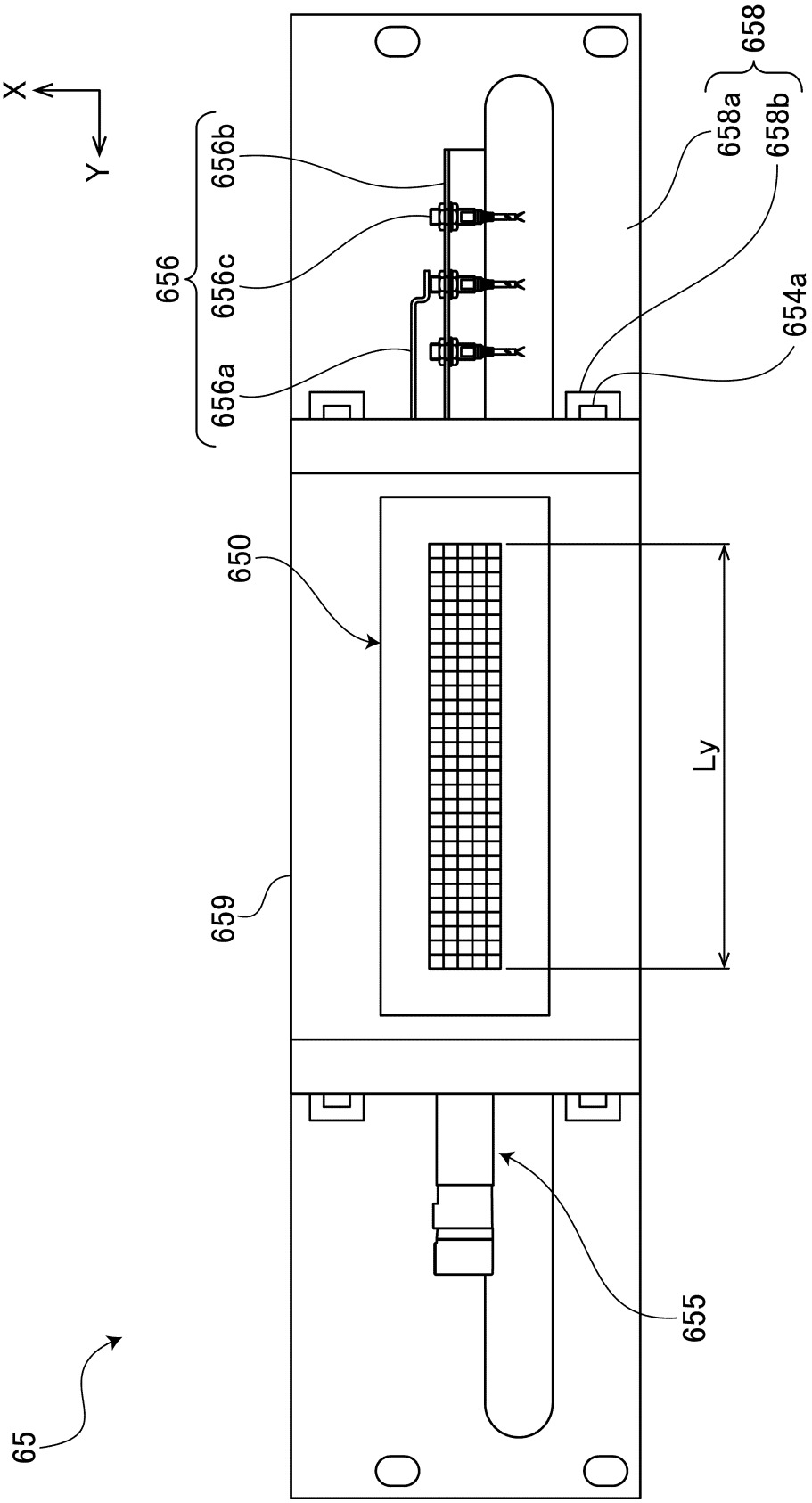

FIG. 32

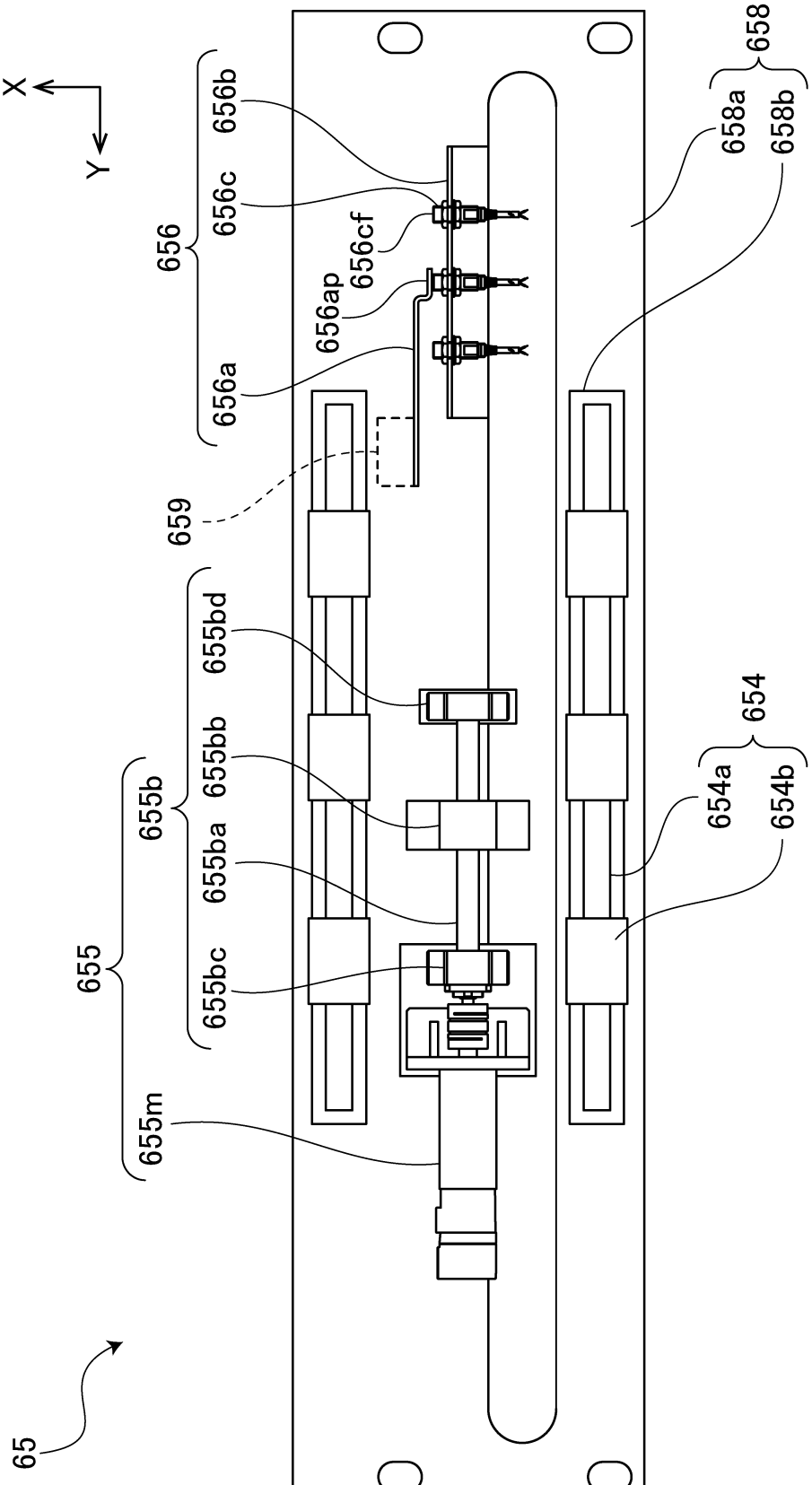
X
Y
65
655
655m
655b
655bc
655ba
655bb
655bd
656
656a
656ap
656cf
656c
656b
659
658
658a
658b
654
654a
654b

FIG. 33

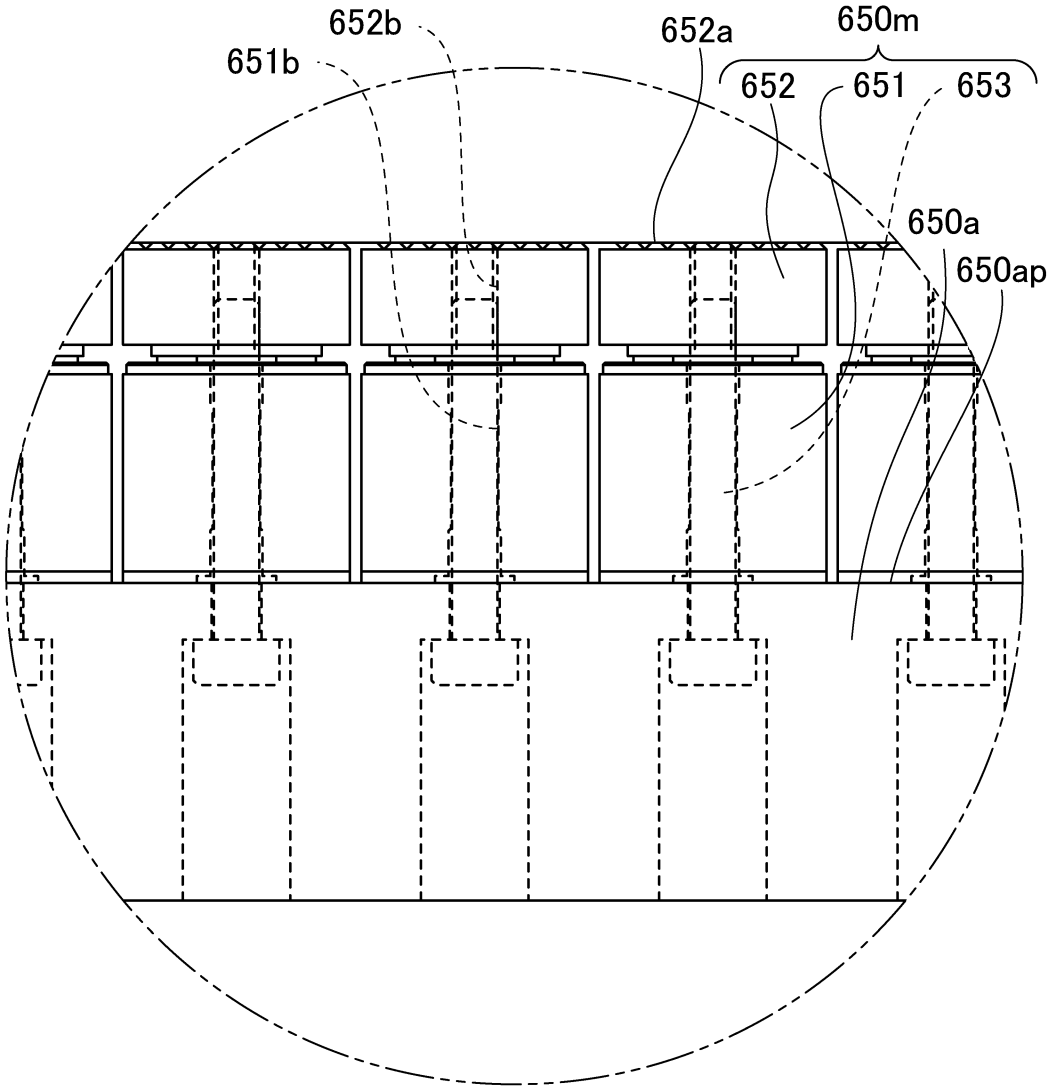

FIG. 34

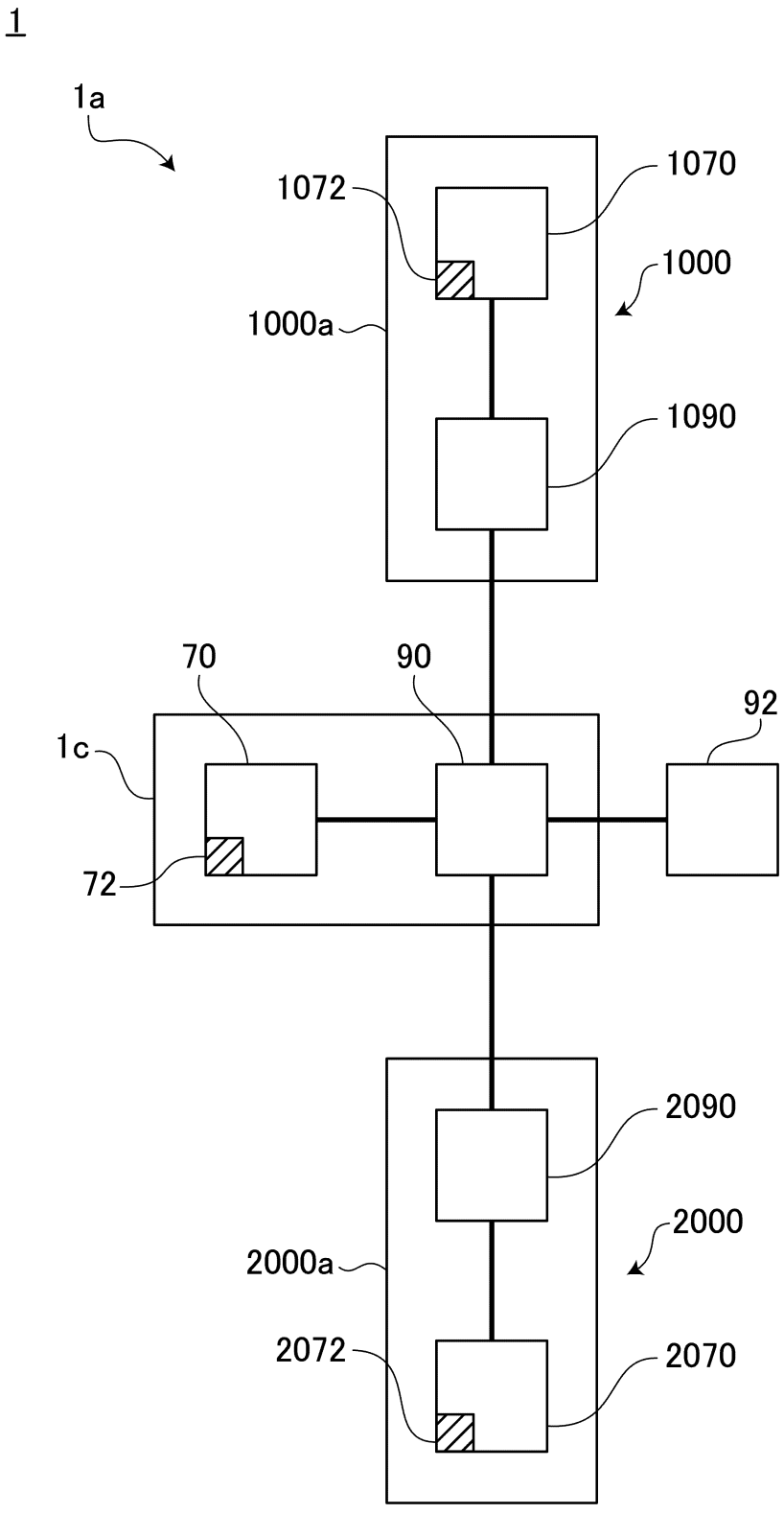
1
1a
1072
1070
1000
1000a
1090
70
90
92
1c
72
2090
2000
2000a
2072
2070

FIG. 35

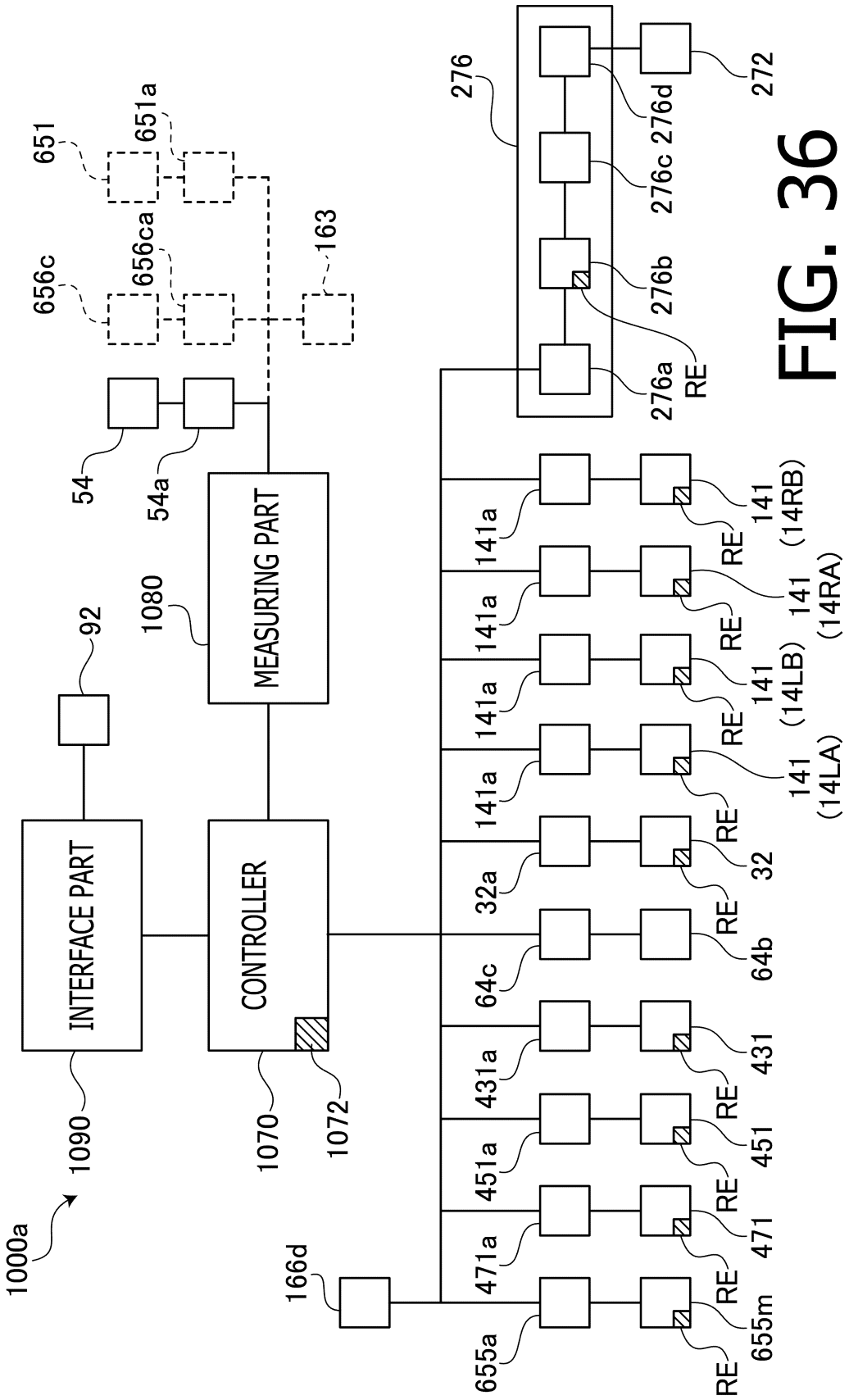
1000a
1090
INTERFACE PART
92
1070
CONTROLLER
1072
1080
MEASURING PART
54
54a
651
651a
656c
656ca
163
166d
655a
655m
471a
471
451a
451
431a
431
64c
64b
32a
32
141a
141
(14LA)
(14LB)
(14RA)
(14RB)
RE
276
276a
276b
276c
276d
272

FIG. 36

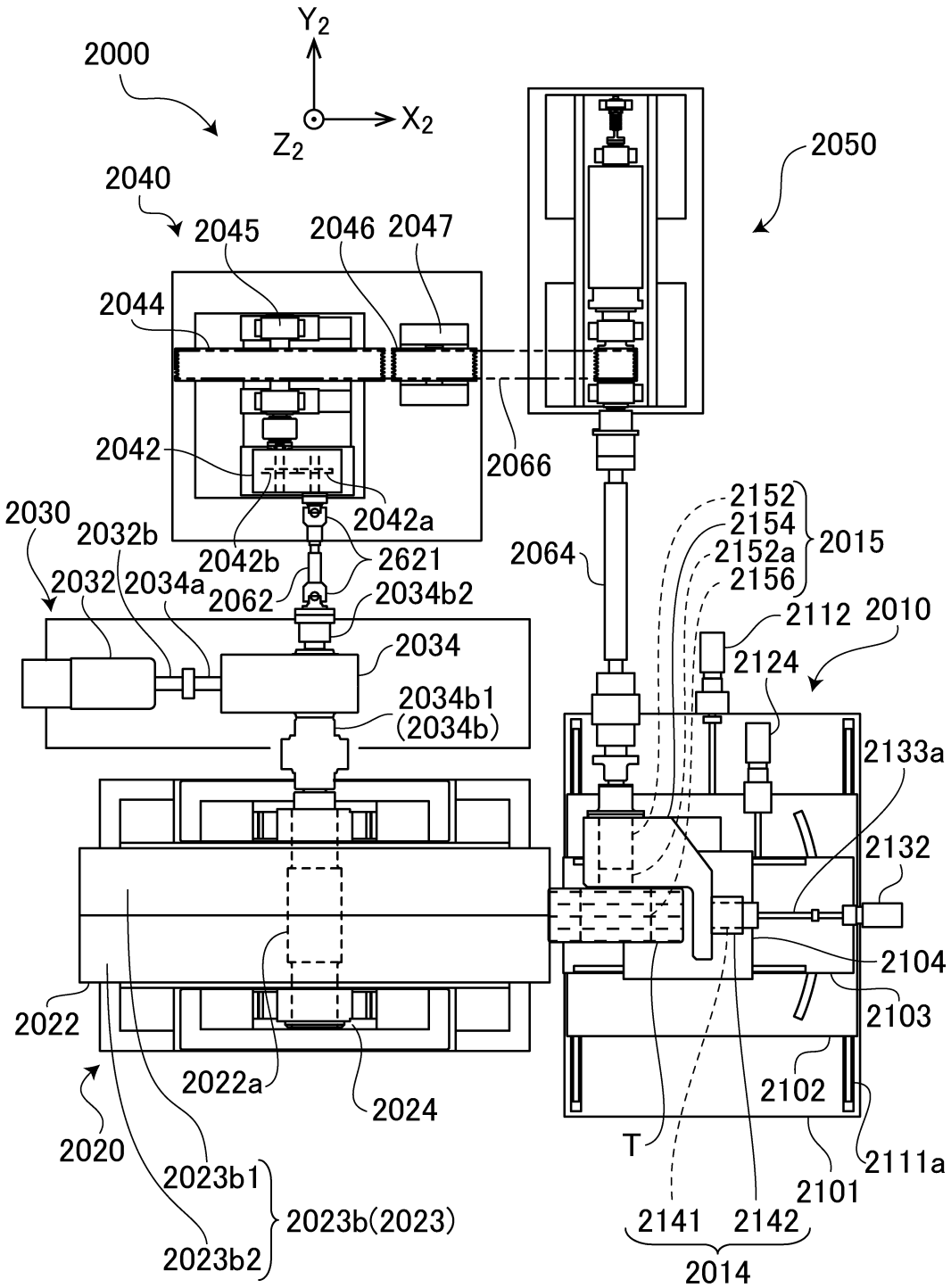
Y2
X2
Z2
2000
2050
2040
2045
2046
2047
2044
2042
2066
2042a
2042b
2621
2030
2032b
2032
2034a
2062
2034b2
2034
2034b1
(2034b)
2064
2152
2154
2152a
2156
2015
2112
2010
2124
2133a
2132
2104
2103
2102
2111a
2101
2141
2142
2014
T
2022
2022a
2024
2020
2023b1
2023b2
2023b(2023)

FIG. 37

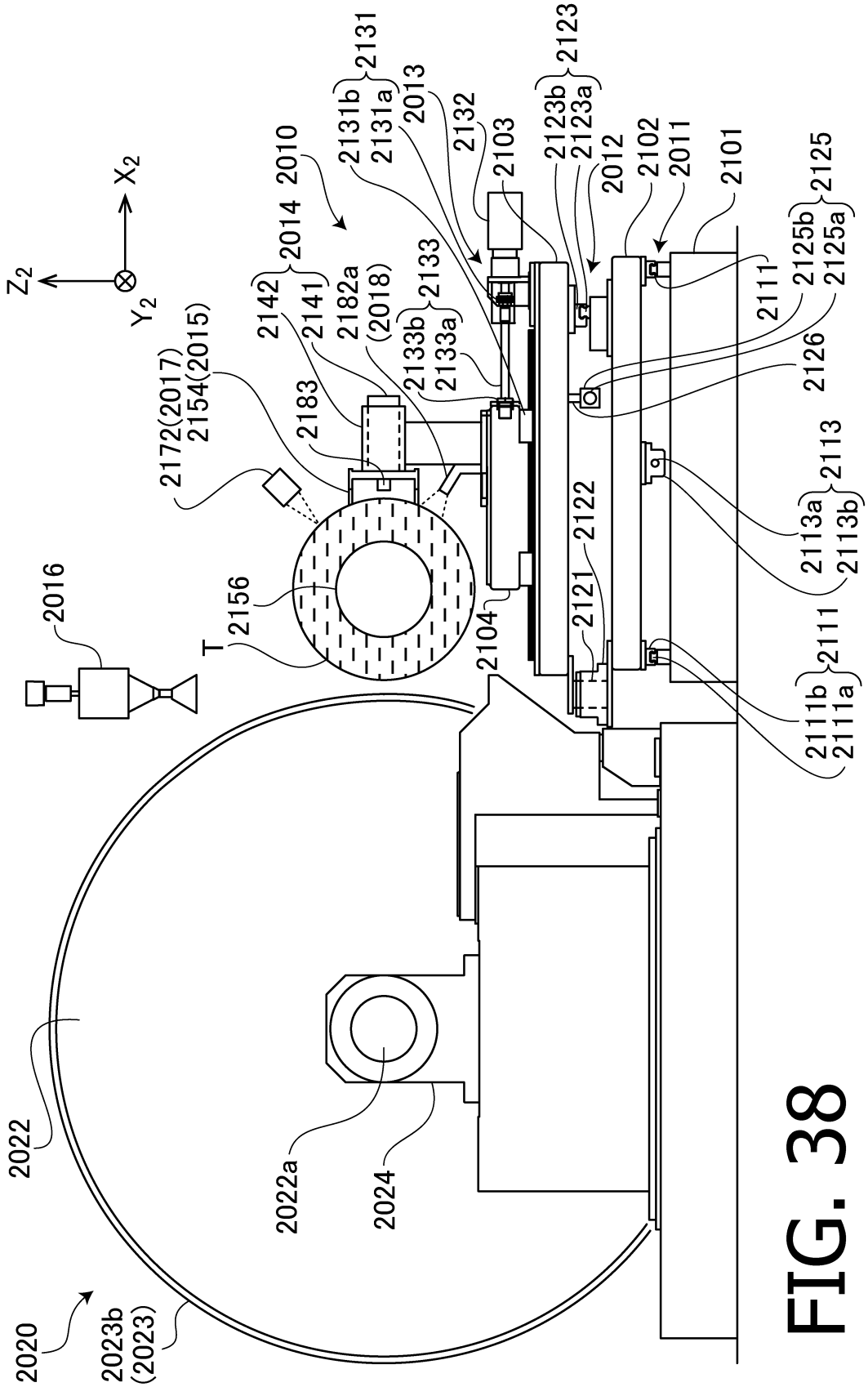
Z_2
X_2
Y_2
2020
2023b
(2023)
2022
2022a
2024
2016
T
2156
2172(2017)
2154(2015)
2183
2142
2141
2014
2010
2182a
(2018)
2133b
2133a
2133
2131b
2131a
2131
2013
2132
2103
2104
2123b
2123a
2123
2012
2102
2011
2101
2125b
2125a
2125
2111
2126
2122
2121
2113a
2113b
2113
2111b
2111a
2111

FIG. 38

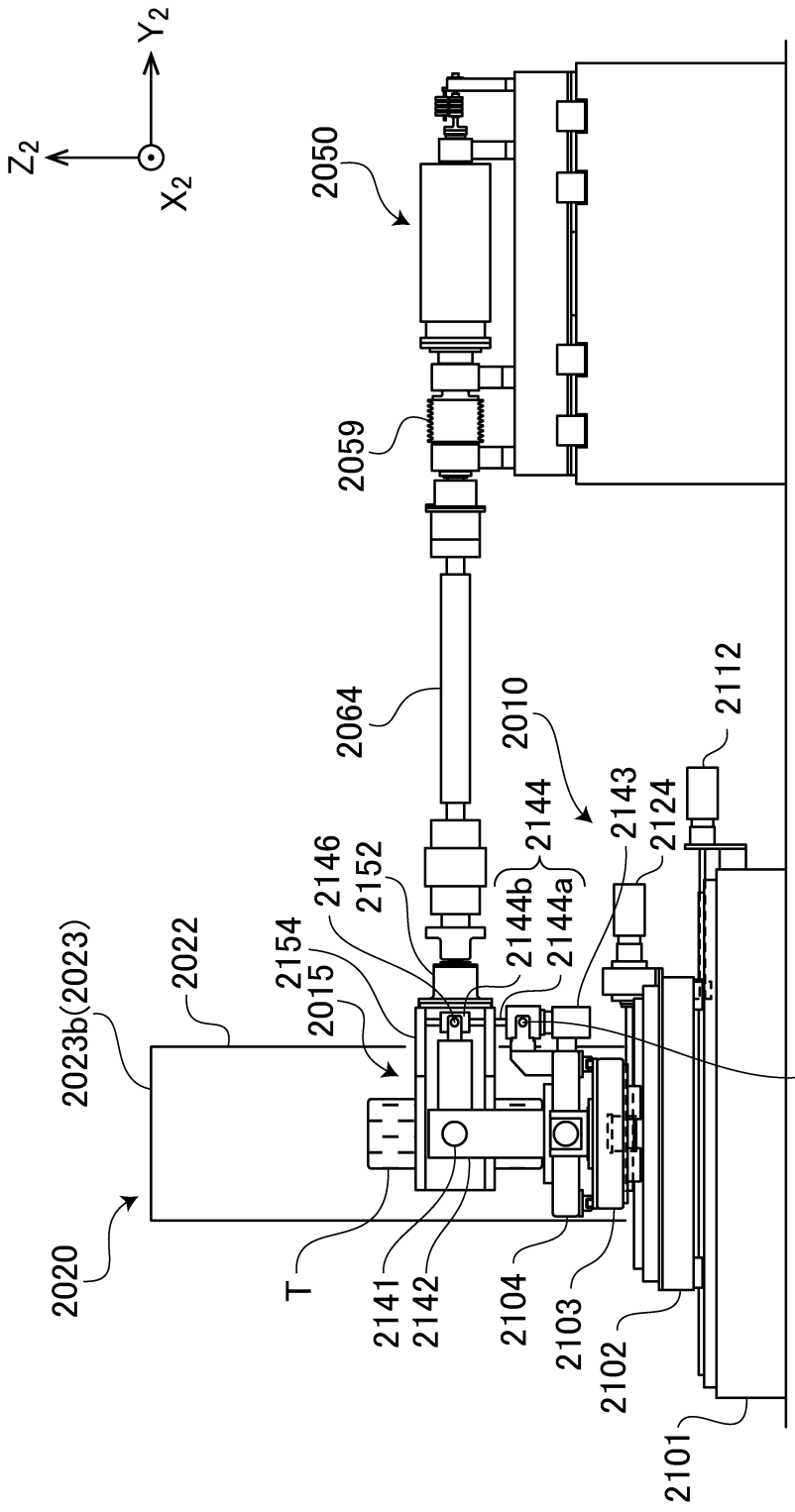
Y2
Z2
X2
2050
2059
2064
2010
2112
2144
2143
2124
2146
2152
2144b
2144a
2154
2015
2022
2023b(2023)
2143b
2020
T
2141
2142
2104
2103
2102
2101

FIG. 39

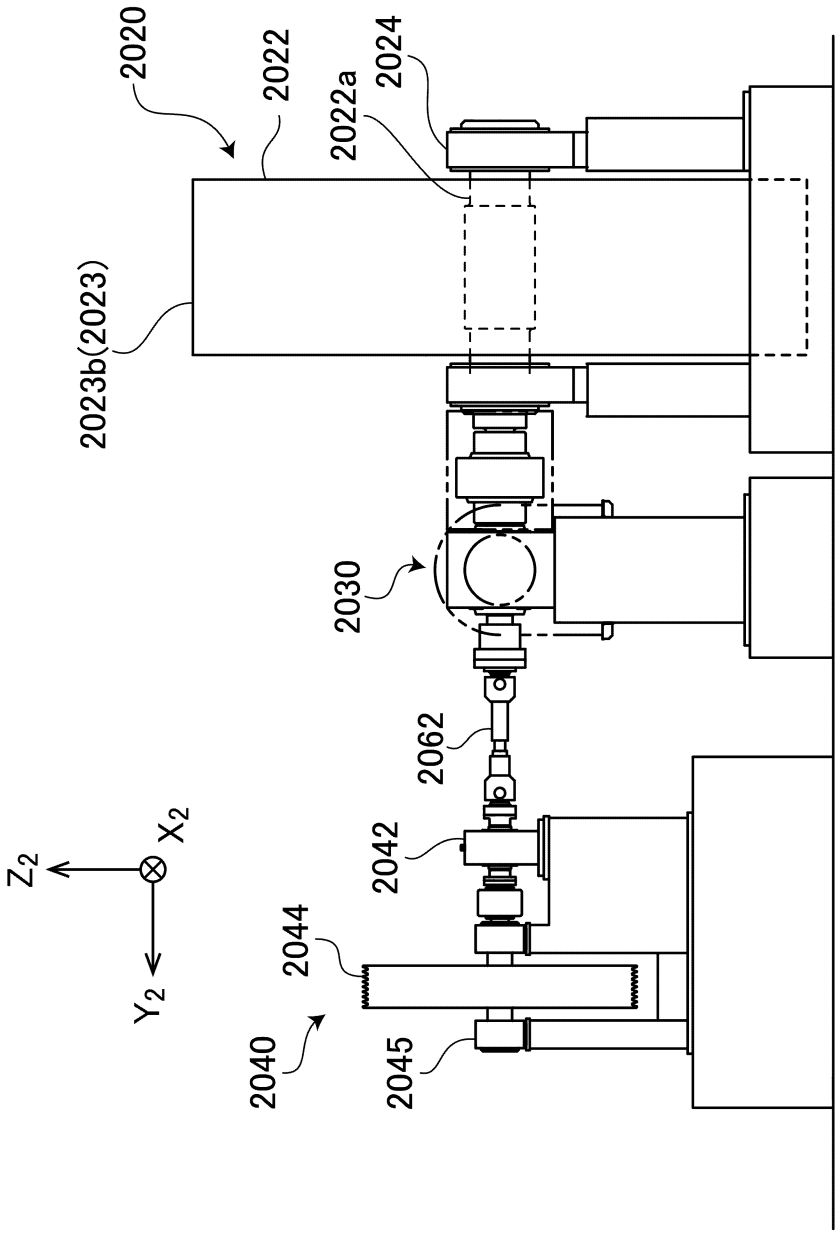
2020
2022
2022a
2024
2023b(2023)
2030
2062
2042
2044
2040
2045
Z2
X2
Y2

FIG. 40

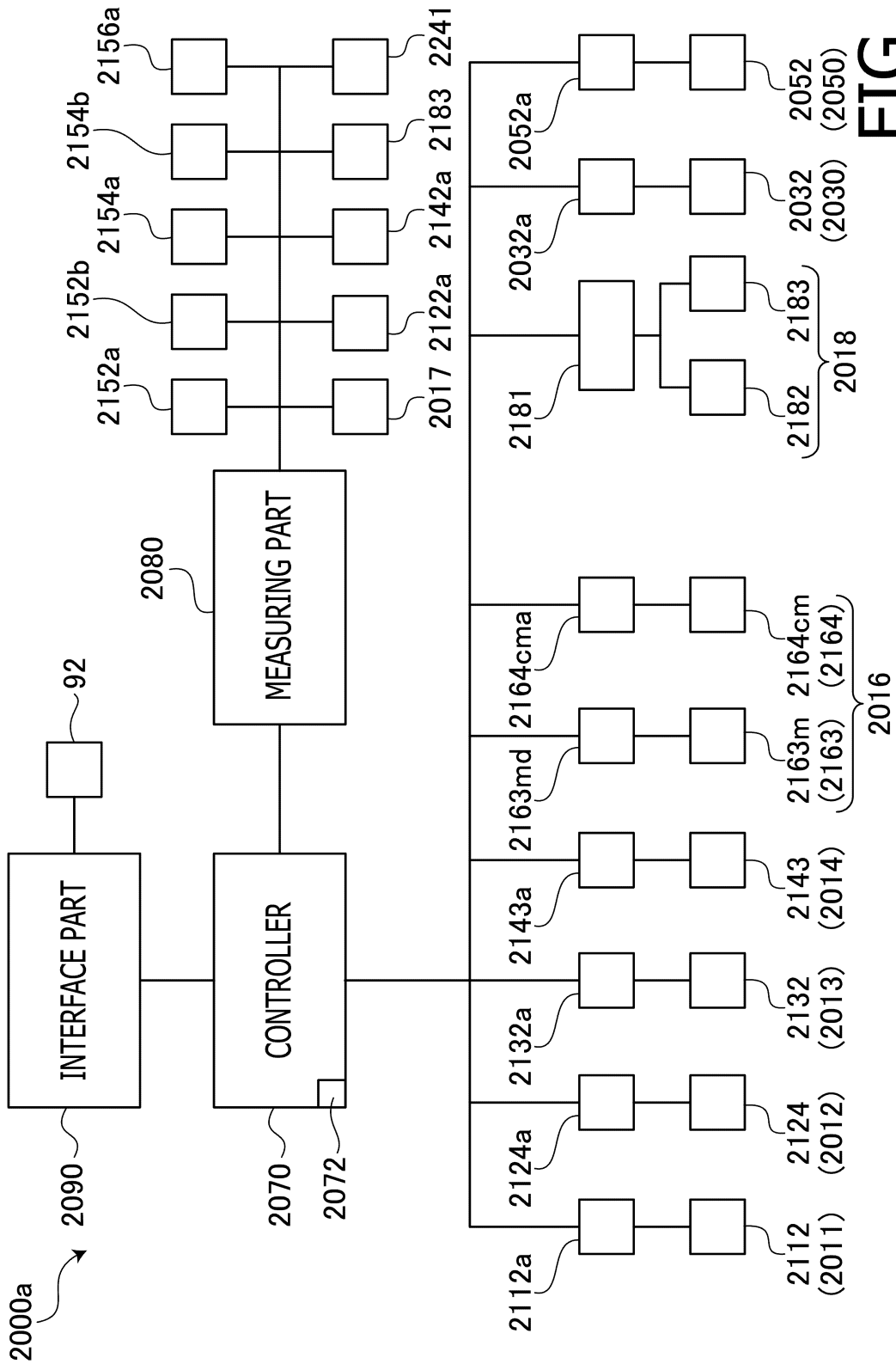
2000a
2090
INTERFACE PART
92
2070
CONTROLLER
2072
2080
MEASURING PART
2152a
2152b
2154a
2154b
2156a
2017
2122a
2142a
2183
2241
2112a
2112
(2011)
2124a
2124
(2012)
2132a
2132
(2013)
2143a
2143
(2014)
2163md
2163m
(2163)
2164cma
2164cm
(2164)
2016
2181
2182
2183
2018
2032a
2032
(2030)
2052a
2052
(2050)

FIG. 41

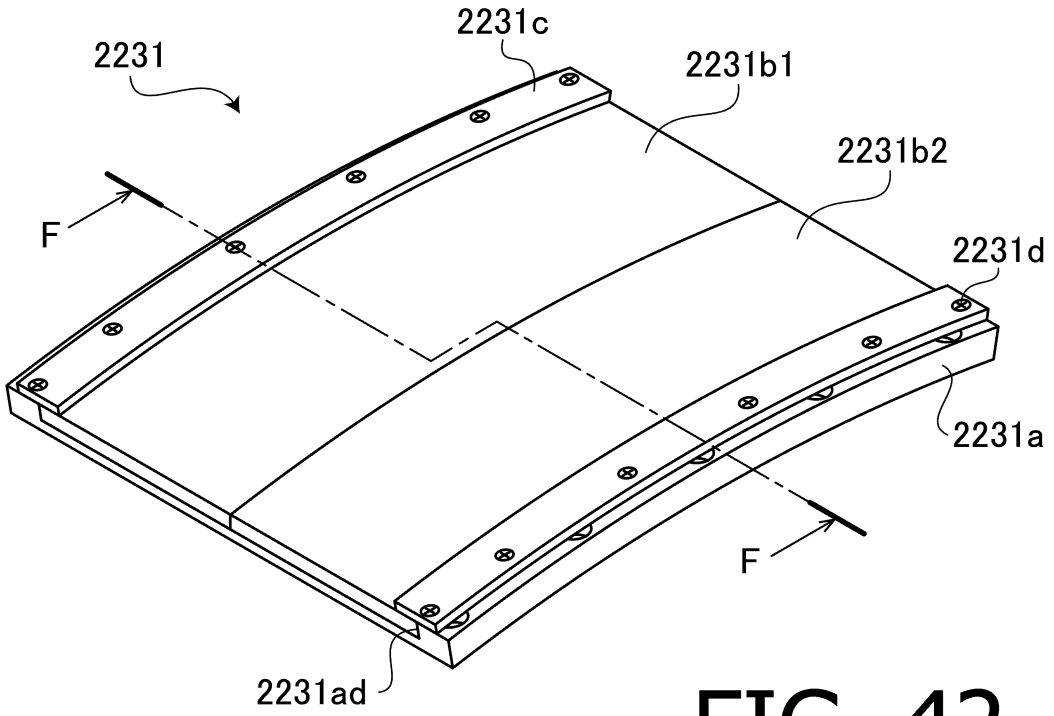

FIG. 42

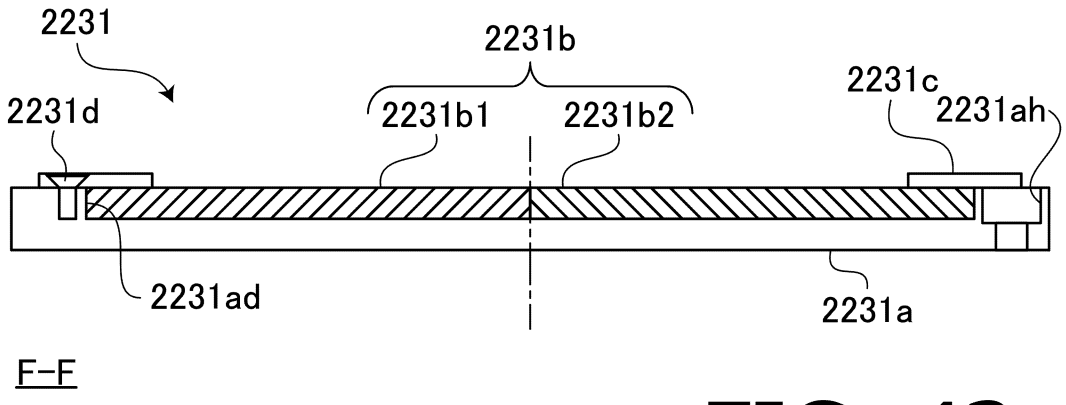

F–F

FIG. 43

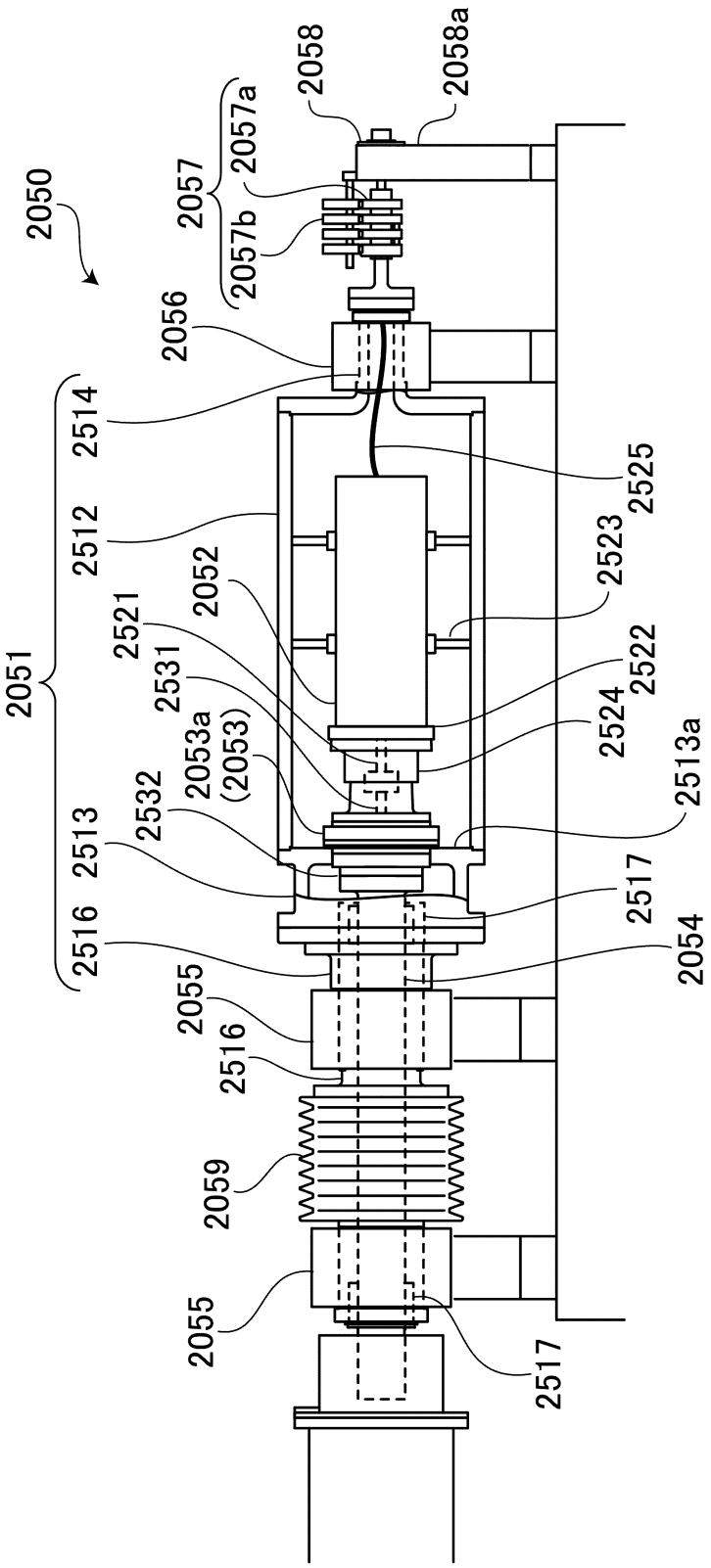
2050
2051
2057
2057a
2057b
2058
2058a
2056
2514
2512
2525
2523
2052
2521
2531
2522
2524
2053a
(2053)
2513a
2532
2513
2517
2516
2054
2055
2516
2059
2055
2517

FIG. 44

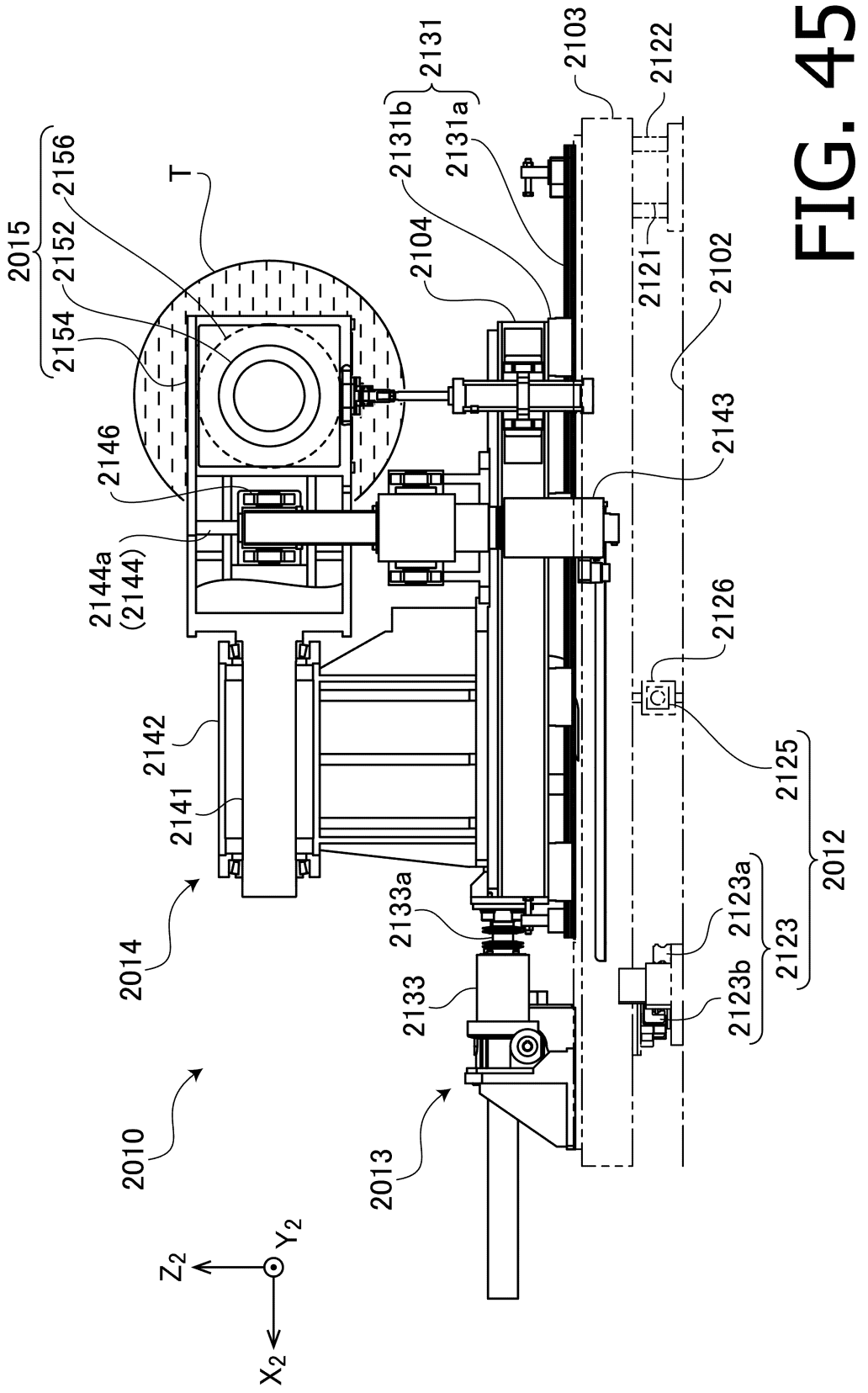
2015
2152
2156
2154
T
2146
2144a
(2144)
2142
2141
2014
2010
2013
2133a
2133
2131b
2131a
2131
2104
2103
2122
2121
2102
2143
2126
2125
2012
2123a
2123
2123b
Z_2
Y_2
X_2

FIG. 45

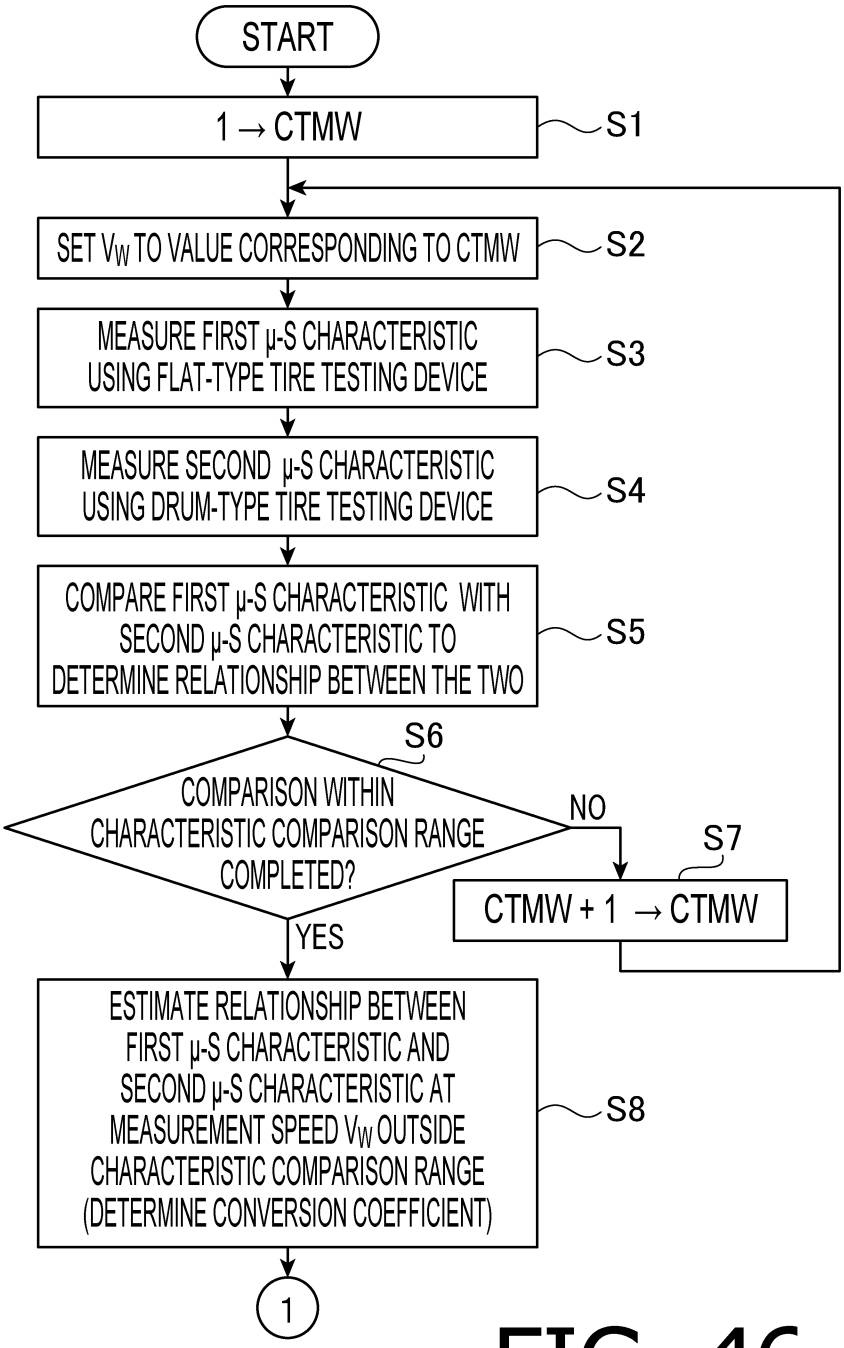
START
1 → CTMW
S1
SET V_W TO VALUE CORRESPONDING TO CTMW
S2
MEASURE FIRST μ-S CHARACTERISTIC USING FLAT-TYPE TIRE TESTING DEVICE
S3
MEASURE SECOND μ-S CHARACTERISTIC USING DRUM-TYPE TIRE TESTING DEVICE
S4
COMPARE FIRST μ-S CHARACTERISTIC WITH SECOND μ-S CHARACTERISTIC TO DETERMINE RELATIONSHIP BETWEEN THE TWO
S5
S6
COMPARISON WITHIN CHARACTERISTIC COMPARISON RANGE COMPLETED?
NO
S7
CTMW + 1 → CTMW
YES
ESTIMATE RELATIONSHIP BETWEEN FIRST μ-S CHARACTERISTIC AND SECOND μ-S CHARACTERISTIC AT MEASUREMENT SPEED V_W OUTSIDE CHARACTERISTIC COMPARISON RANGE (DETERMINE CONVERSION COEFFICIENT)
S8
1

FIG. 46

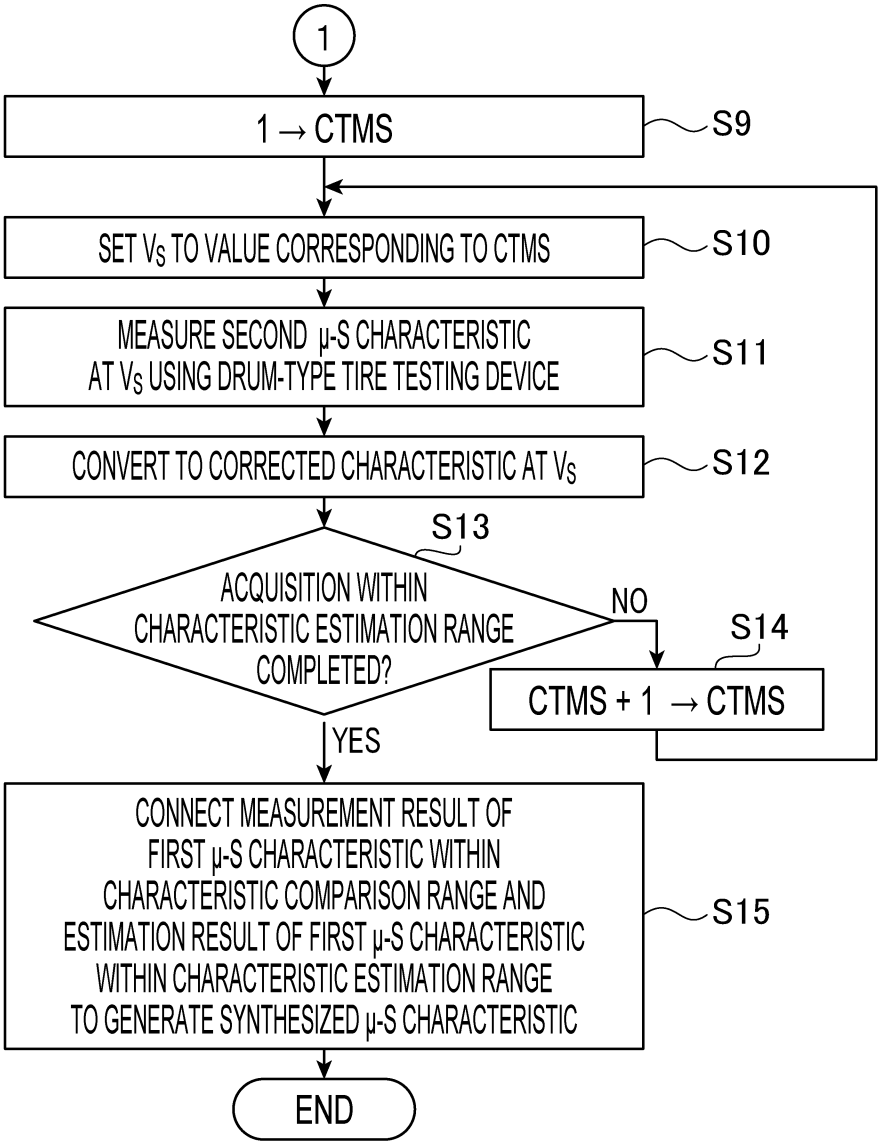
1
1 → CTMS
S9
SET V_S TO VALUE CORRESPONDING TO CTMS
S10
MEASURE SECOND μ-S CHARACTERISTIC AT V_S USING DRUM-TYPE TIRE TESTING DEVICE
S11
CONVERT TO CORRECTED CHARACTERISTIC AT V_S
S12
S13
ACQUISITION WITHIN CHARACTERISTIC ESTIMATION RANGE COMPLETED?
NO
S14
CTMS + 1 → CTMS
YES
CONNECT MEASUREMENT RESULT OF FIRST μ-S CHARACTERISTIC WITHIN CHARACTERISTIC COMPARISON RANGE AND ESTIMATION RESULT OF FIRST μ-S CHARACTERISTIC WITHIN CHARACTERISTIC ESTIMATION RANGE TO GENERATE SYNTHESIZED μ-S CHARACTERISTIC
S15
END

FIG. 47