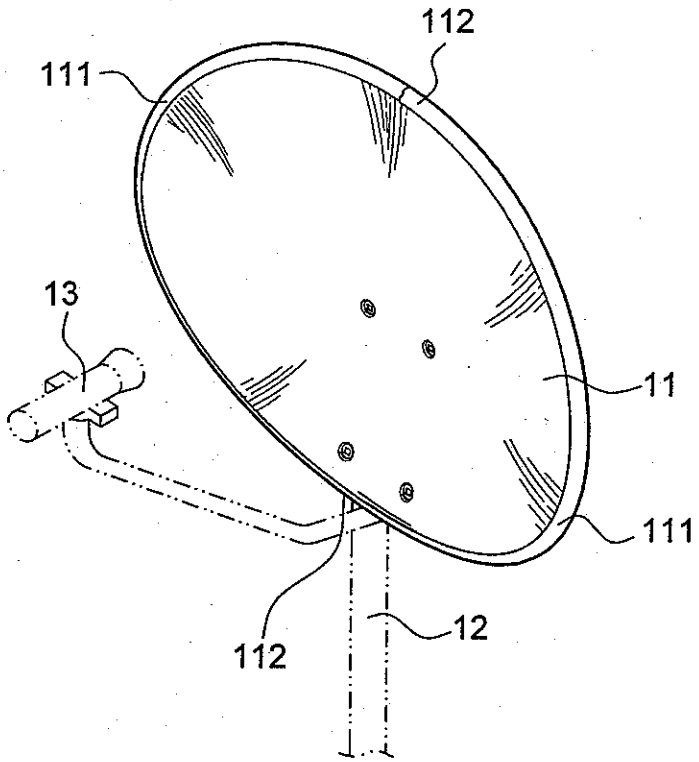

FIG.1(A)
PRIOR ART

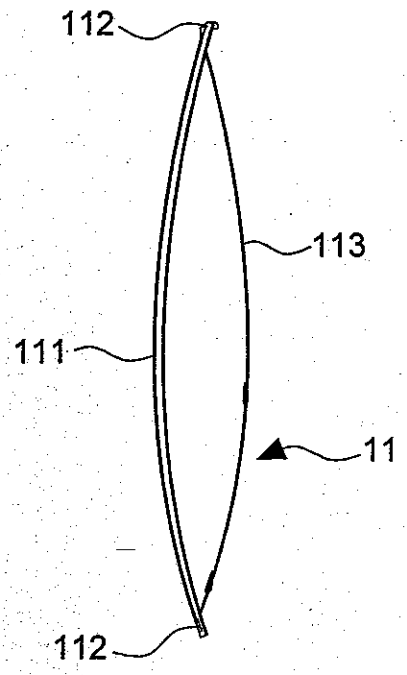

FIG.1(B)
PRIOR ART

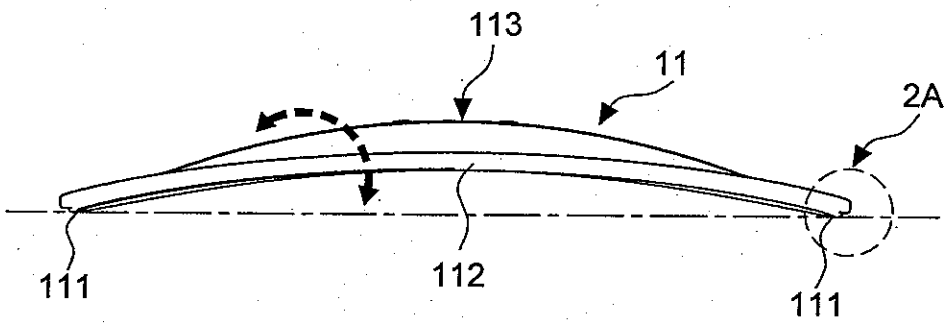

FIG.1(C)
PRIOR ART

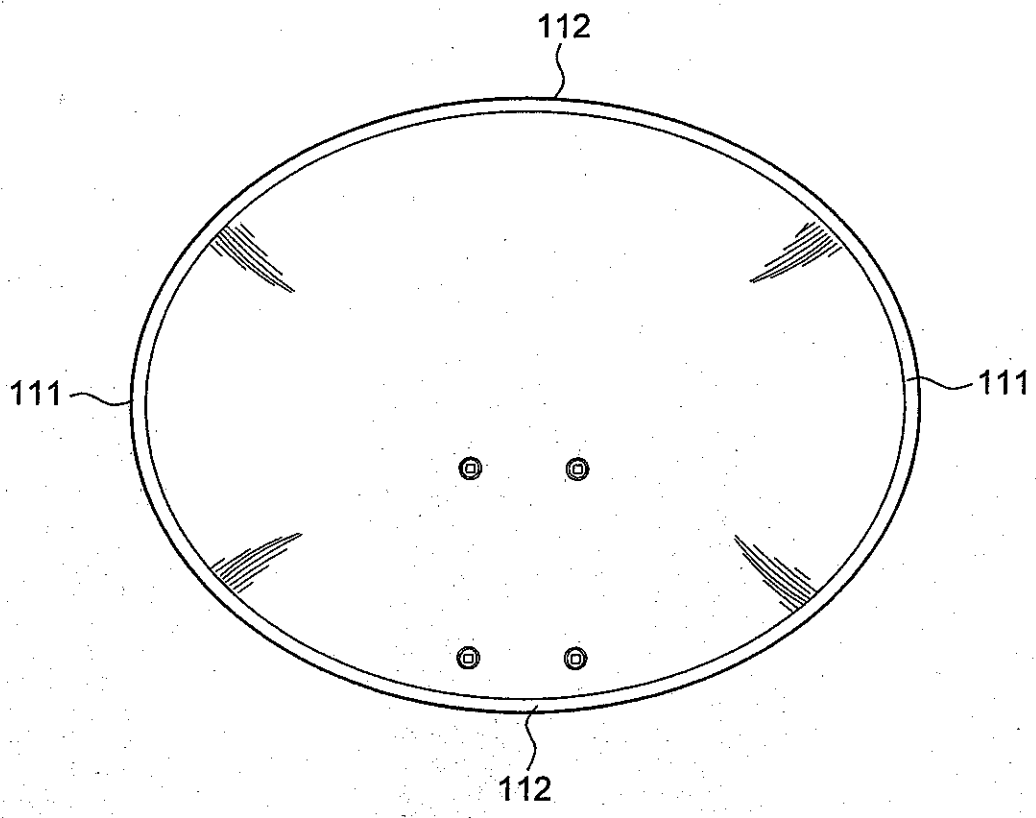

FIG.1(D)
PRIOR ART

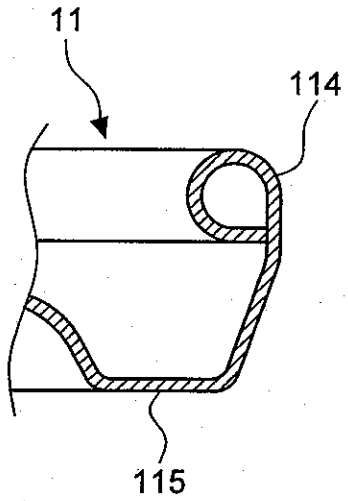

FIG.2(A)
PRIOR ART

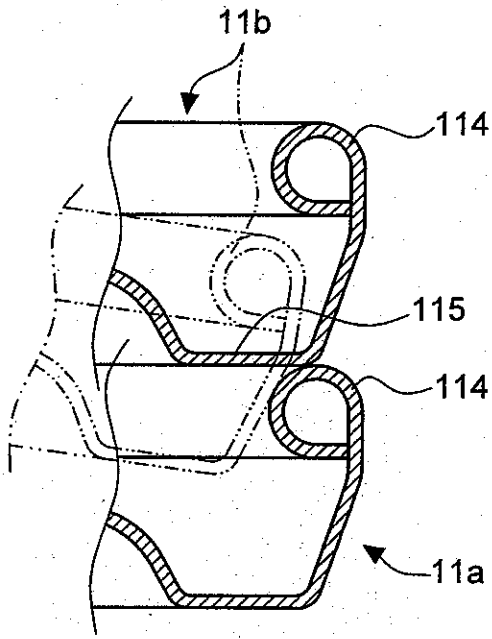

FIG.2(B)
PRIOR ART

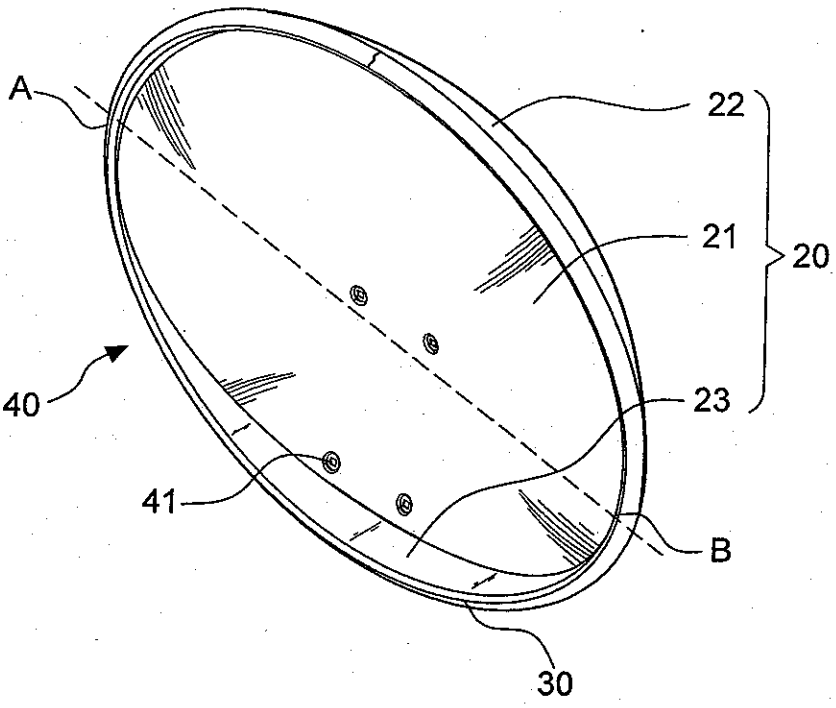

FIG.3(A)

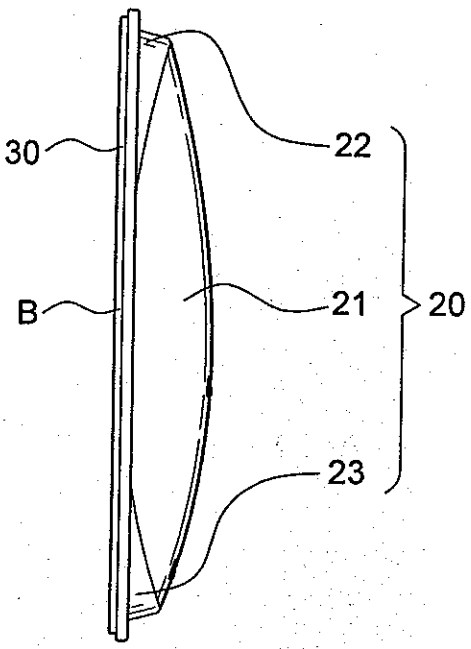

FIG.3(B)

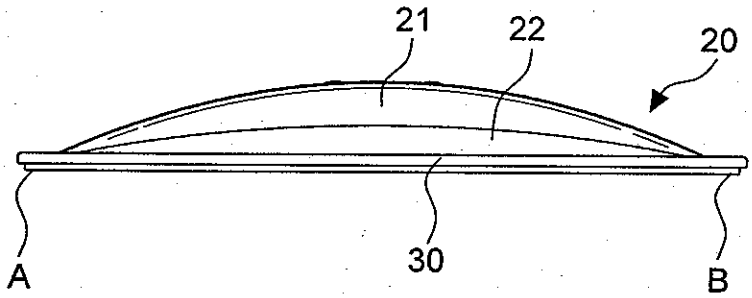

FIG.3(C)

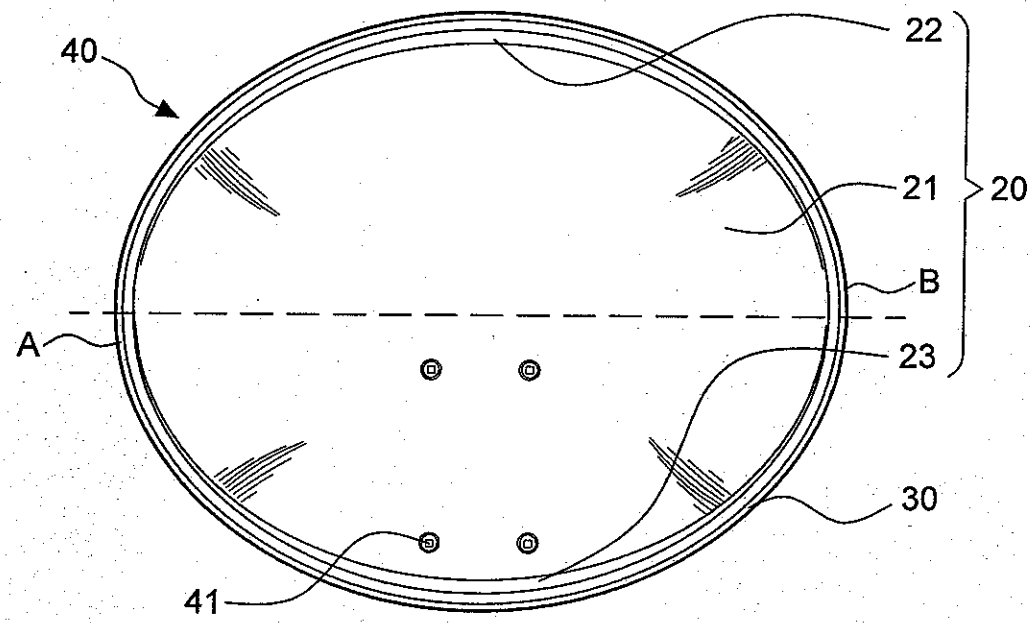

FIG.3(D)

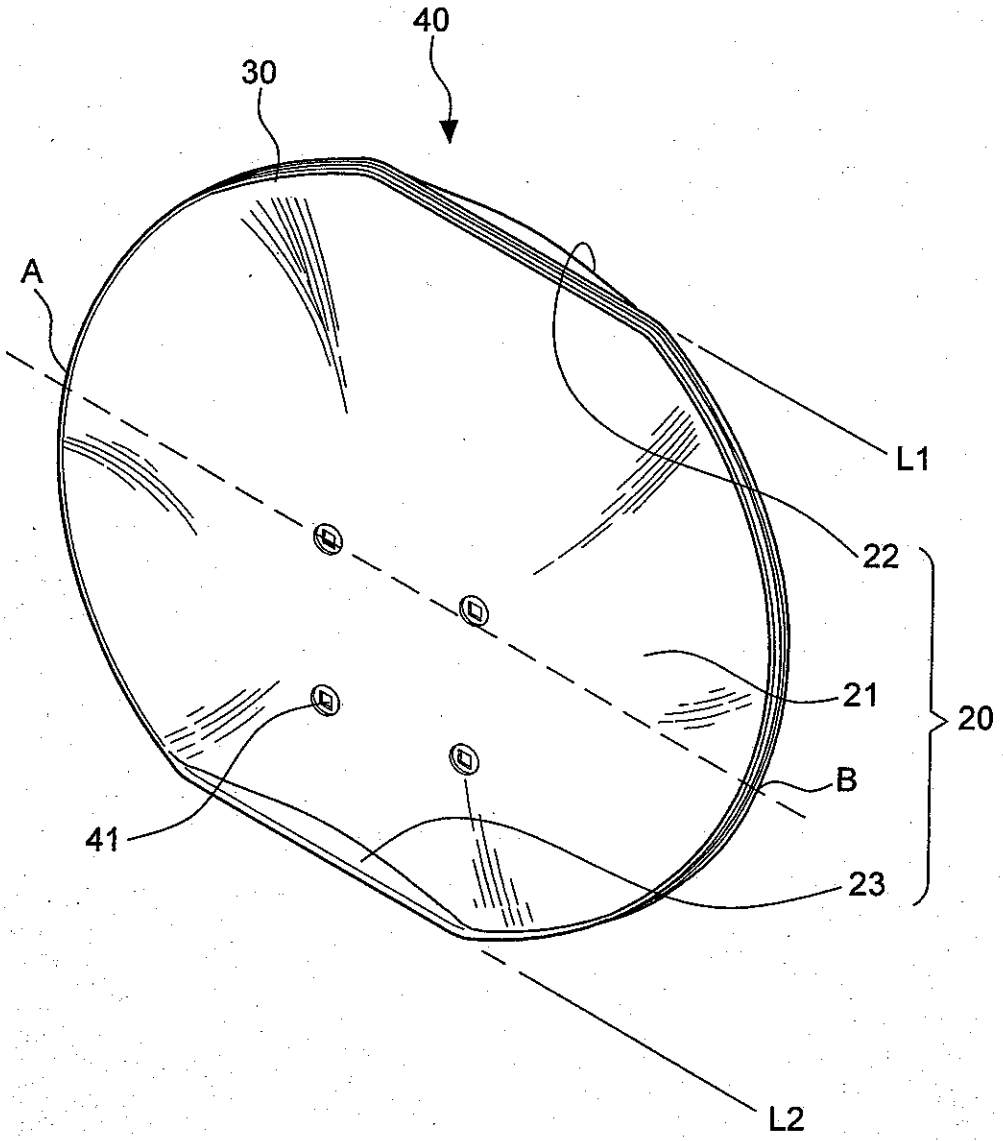

FIG.4

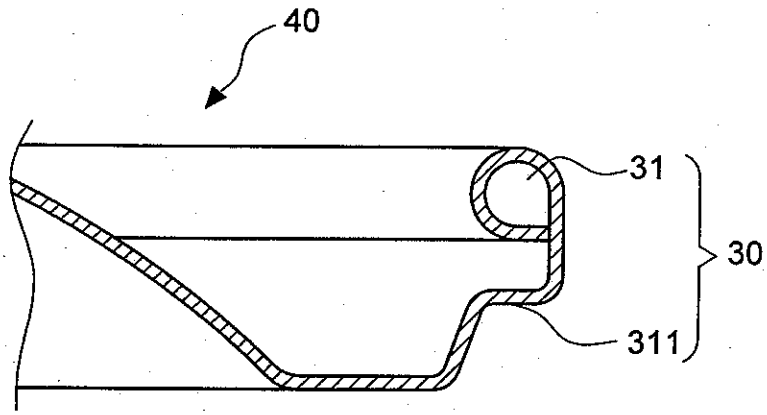

FIG.5

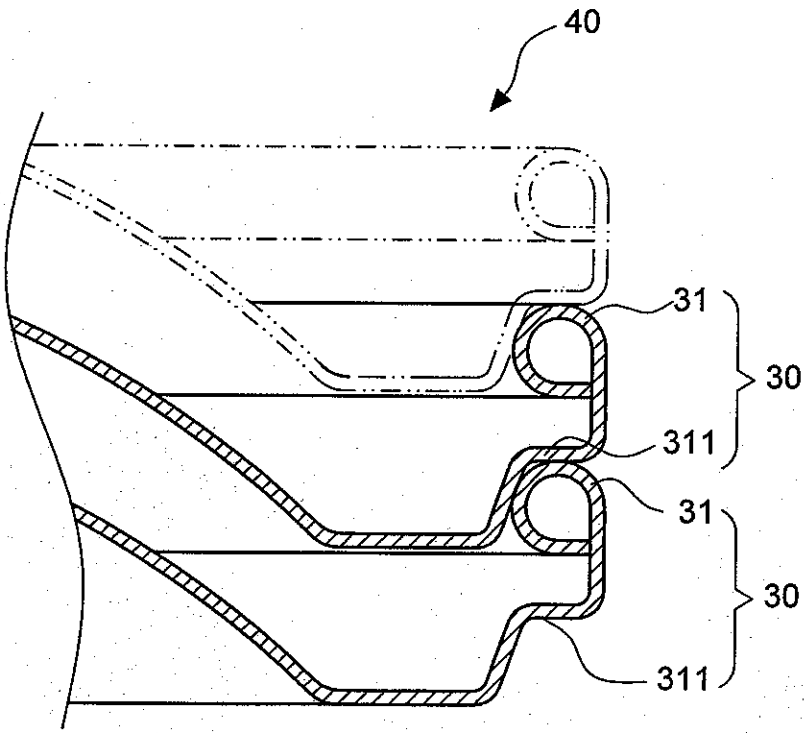

FIG.6

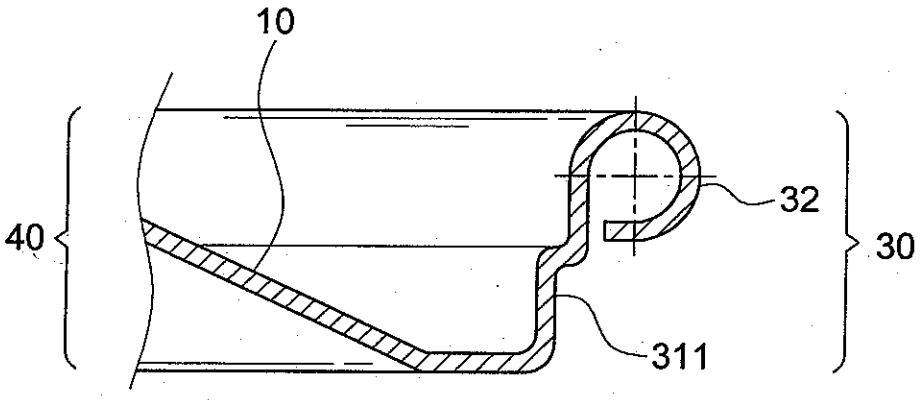

FIG.7

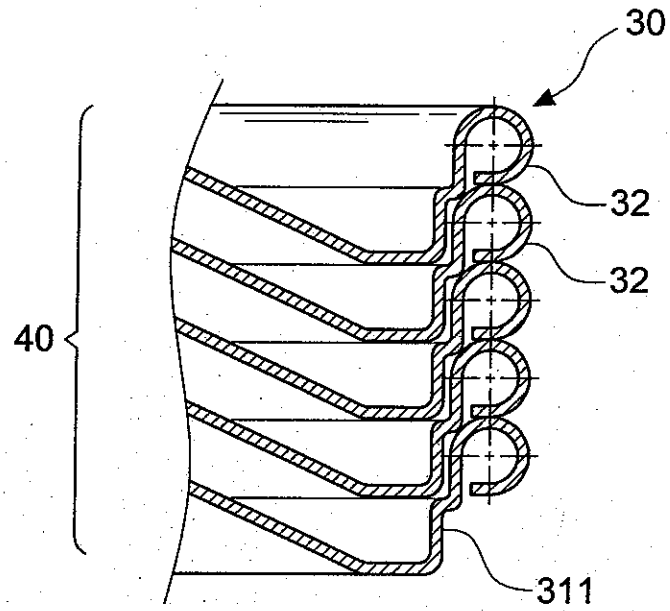

FIG.8