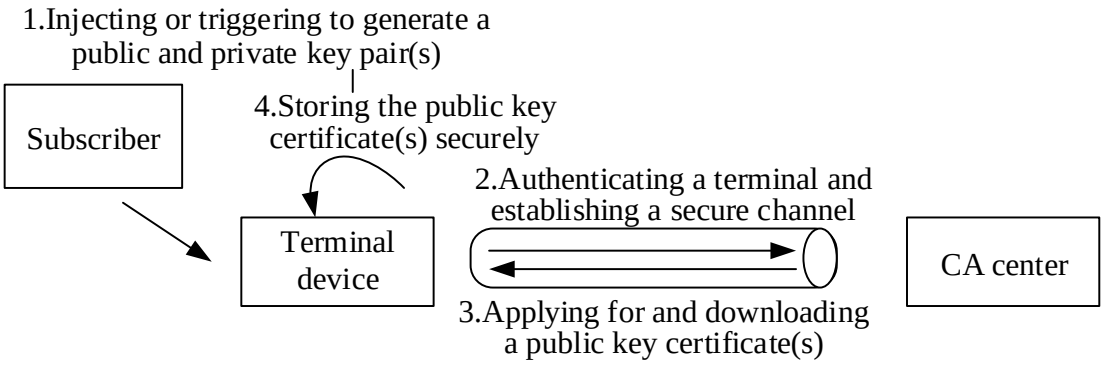
1.Injecting or triggering to generate a public and private key pair(s)
Subscriber
4.Storing the public key certificate(s) securely
Terminal device
2.Authenticating a terminal and establishing a secure channel
CA center
3.Applying for and downloading a public key certificate(s)

FIG. 1

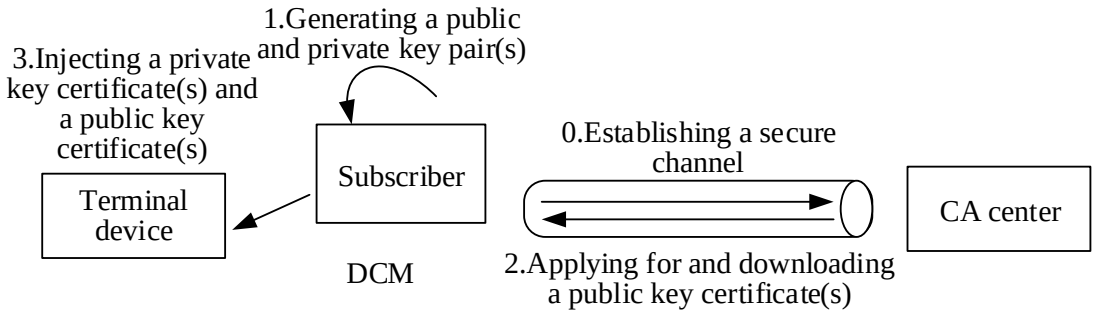
1.Generating a public and private key pair(s)
3.Injecting a private key certificate(s) and a public key certificate(s)
Subscriber
Terminal device
DCM
0.Establishing a secure channel
CA center
2.Applying for and downloading a public key certificate(s)

FIG. 2

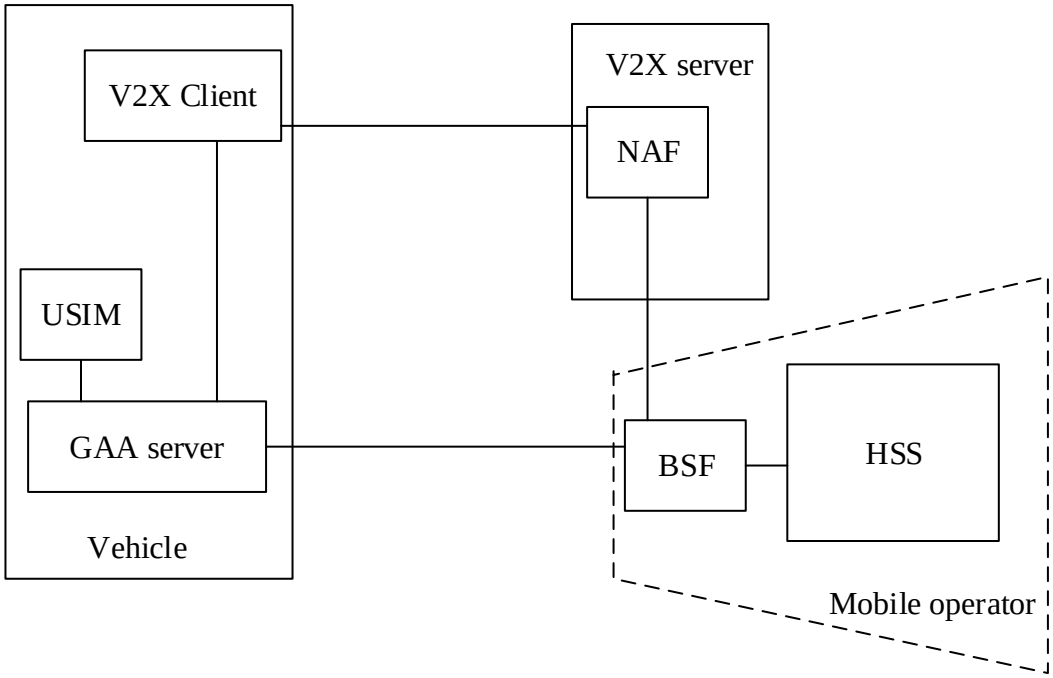
V2X Client
V2X server
NAF
USIM
GAA server
BSF
HSS
Vehicle
Mobile operator

FIG. 3

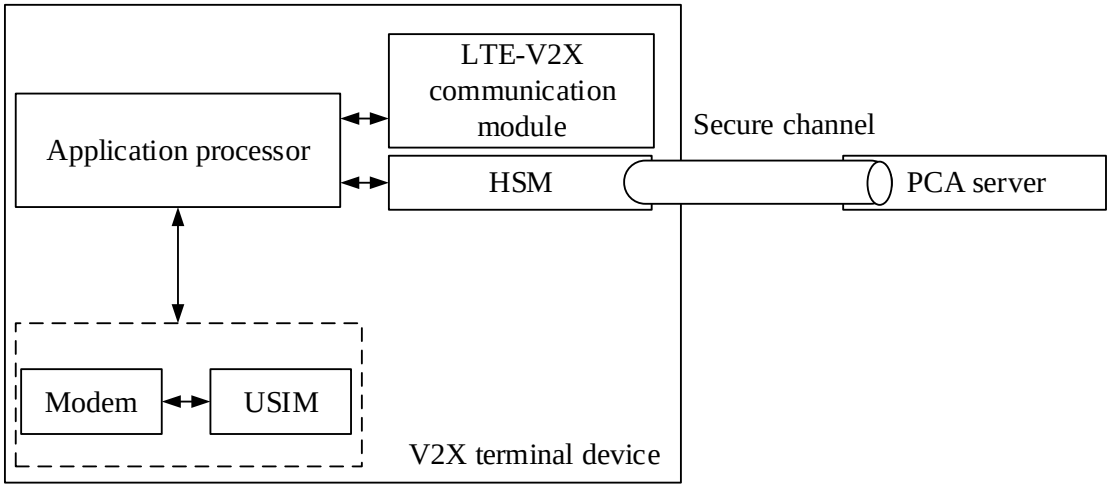
LTE-V2X communication module
Application processor
Secure channel
HSM
PCA server
Modem
USIM
V2X terminal device

FIG. 4

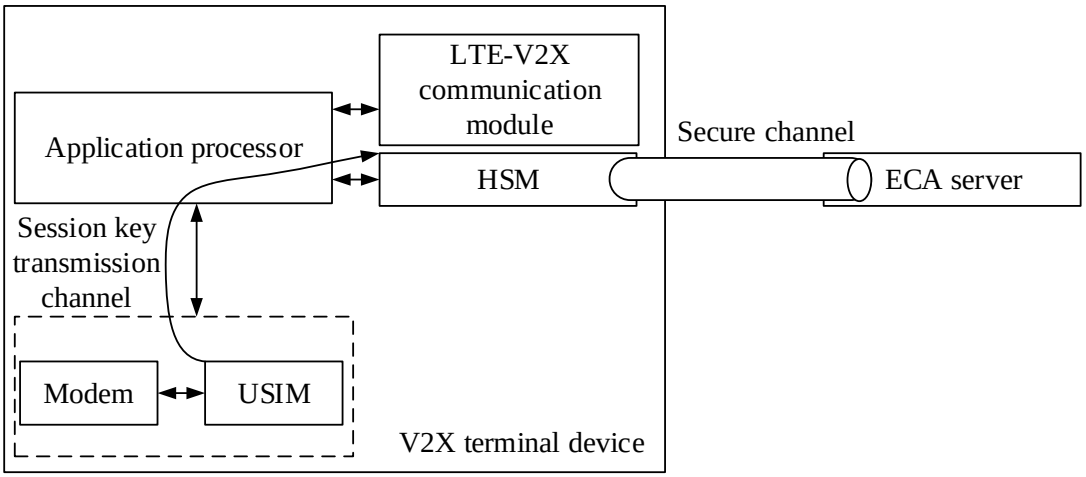
LTE-V2X communication module
Application processor
Secure channel
HSM
ECA server
Session key transmission channel
Modem
USIM
V2X terminal device

FIG. 5

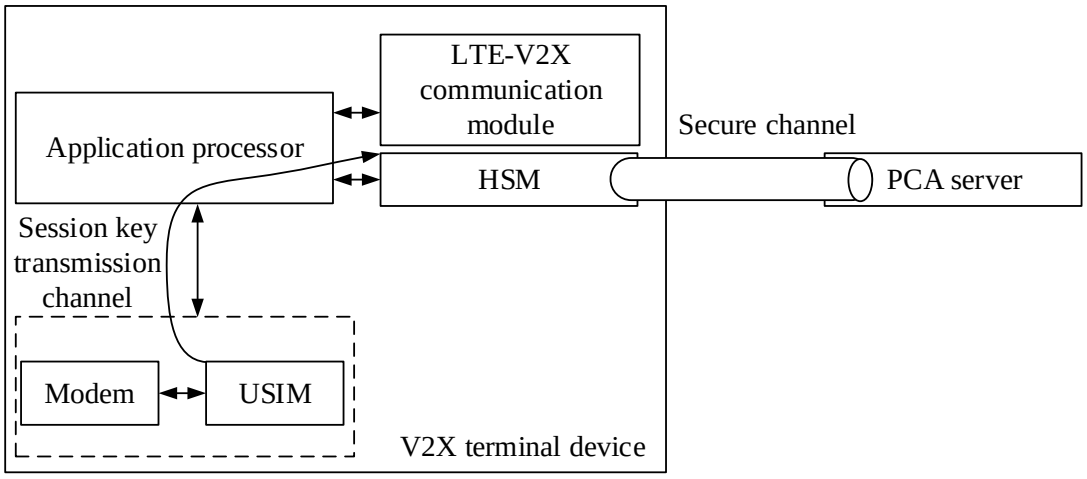

FIG. 6

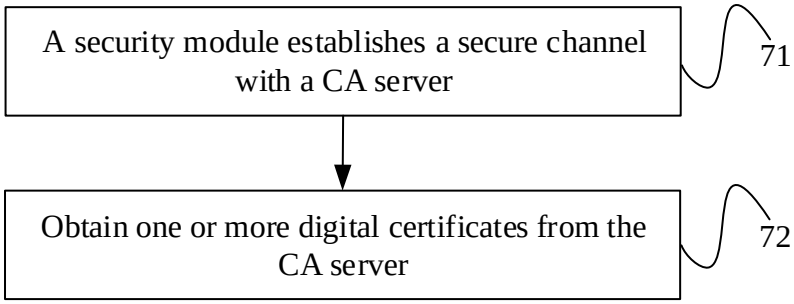

FIG. 7

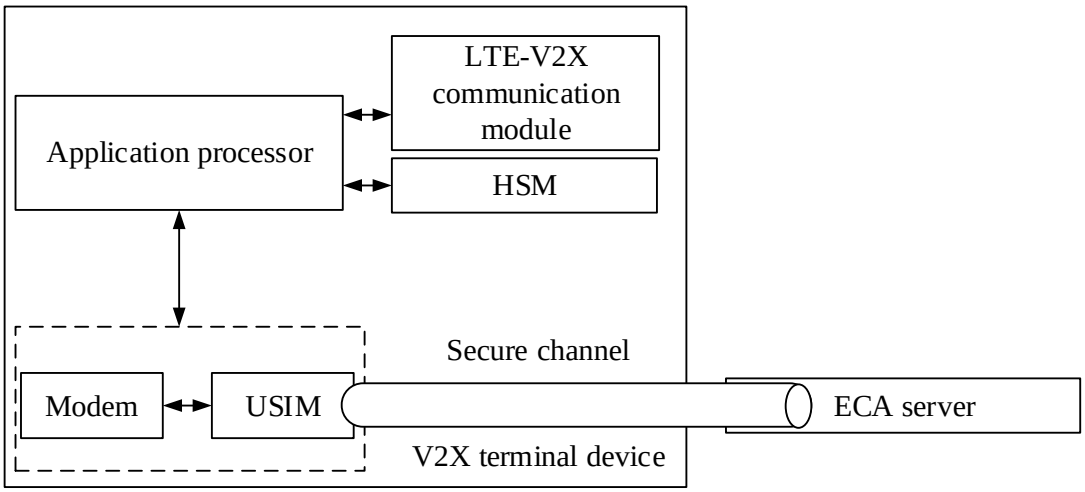

FIG. 8

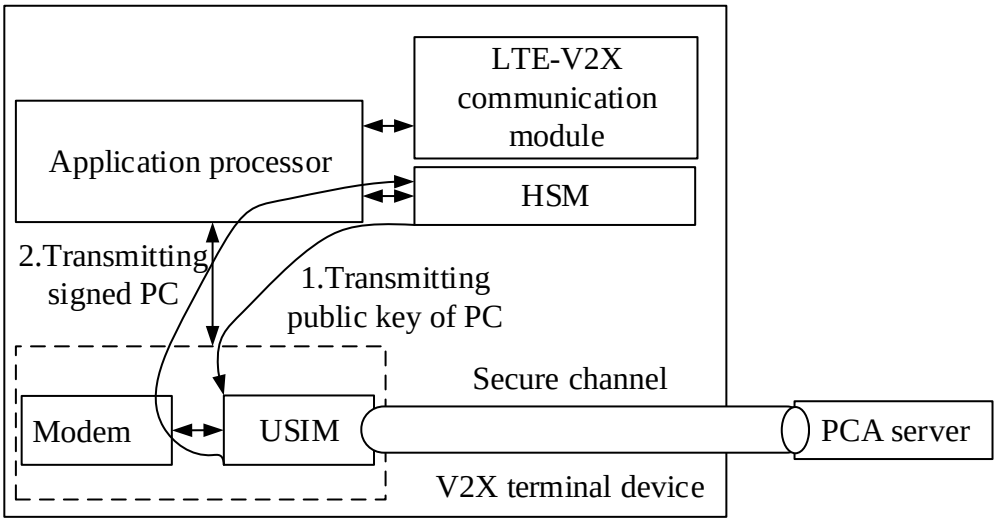

FIG. 9

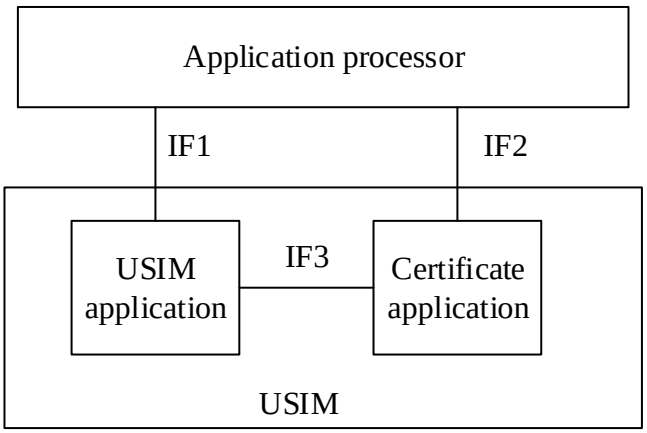

FIG. 10

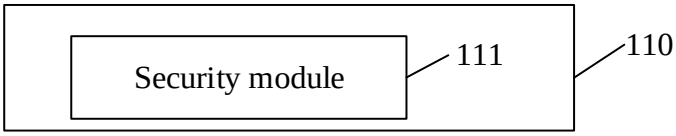

FIG. 11