(12) INTERNATIONAL APPLICATION PUBLISHED UNDER THE PATENT COOPERATION TREATY (PCT)

CORRECTED VERSION

(19) World Intellectual Property Organization
International Bureau

(43) International Publication Date
26 July 2007 (26.07.2007)

PCT

(10) International Publication Number
WO 2007/084425 A2

(51) International Patent Classification:
B01L 3/00 (2006.01)

(21) International Application Number:
PCT/US2007/000960

(22) International Filing Date: 12 January 2007 (12.01.2007)

(25) Filing Language: English

(26) Publication Language: English

(30) Priority Data:
60/760,552 19 January 2006 (19.01.2006) US

(71) Applicant *(for all designated States except US)*: **KIONIX INC.** [US/US]; 36 Thornwood Drive, Ithaca, NY 14850 (US).

(72) Inventors; and
(75) Inventors/Applicants *(for US only)*: **ZHOU, Peng** [CN/US]; 44 Susanna Way, Newton, PA 18940 (US). **YOUNG, Lincoln** [US/US]; 504 Lower Creek Road, Ithaca, NY 14850 (US).

(74) Agent: **KELLY, Edward, J.**; Fish & Neave IP Group, Ropes & Gray LLP, One International Place, Boston, MA 02110-2624 (US).

(81) Designated States *(unless otherwise indicated, for every kind of national protection available)*: AE, AG, AL, AM, AT, AU, AZ, BA, BB, BG, BR, BW, BY, BZ, CA, CH, CN, CO, CR, CU, CZ, DE, DK, DM, DZ, EC, EE, EG, ES, FI, GB, GD, GE, GH, GM, GT, HN, HR, HU, ID, IL, IN, IS, JP, KE, KG, KM, KN, KP, KR, KZ, LA, LC, LK, LR, LS, LT, LU, LV, LY, MA, MD, MG, MK, MN, MW, MX, MY, MZ, NA, NG, NI, NO, NZ, OM, PG, PH, PL, PT, RO, RS, RU, SC, SD, SE, SG, SK, SL, SM, SV, SY, TJ, TM, TN, TR, TT, TZ, UA, UG, US, UZ, VC, VN, ZA, ZM, ZW.

(84) Designated States *(unless otherwise indicated, for every kind of regional protection available)*: ARIPO (BW, GH, GM, KE, LS, MW, MZ, NA, SD, SL, SZ, TZ, UG, ZM, ZW), Eurasian (AM, AZ, BY, KG, KZ, MD, RU, TJ, TM), European (AT, BE, BG, CH, CY, CZ, DE, DK, EE, ES, FI, FR, GB, GR, HU, IE, IS, IT, LT, LU, LV, MC, NL, PL, PT, RO, SE, SI, SK, TR), OAPI (BF, BJ, CF, CG, CI, CM, GA, GN, GQ, GW, ML, MR, NE, SN, TD, TG).

Published:
— *without international search report and to be republished upon receipt of that report*

(48) Date of publication of this corrected version:
29 November 2007

(15) Information about Correction:
see PCT Gazette No. 48/2007 of 29 November 2007

For two-letter codes and other abbreviations, refer to the "Guidance Notes on Codes and Abbreviations" appearing at the beginning of each regular issue of the PCT Gazette.

(54) Title: MICROFLUIDIC CHIPS AND ASSAY SYSTEMS

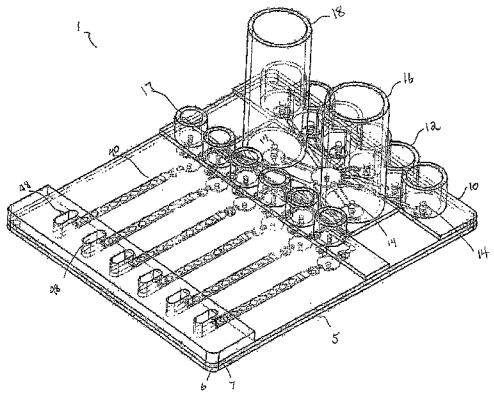

(57) Abstract: The systems and methods described herein include a microfluidic chip having a plurality of microfeatures interconnected to provide a configurable fluid transport system for processing at least one reagent. Inserts are provided to removably interfit into one or more of the microfeatures of the chip, wherein the inserts include sites for interactions with the reagent. As will be seen from the following description, the microfluidic chip and the inserts provide an efficient an accurate approach for conducting parallel assays.

WO 2007/084425 A2