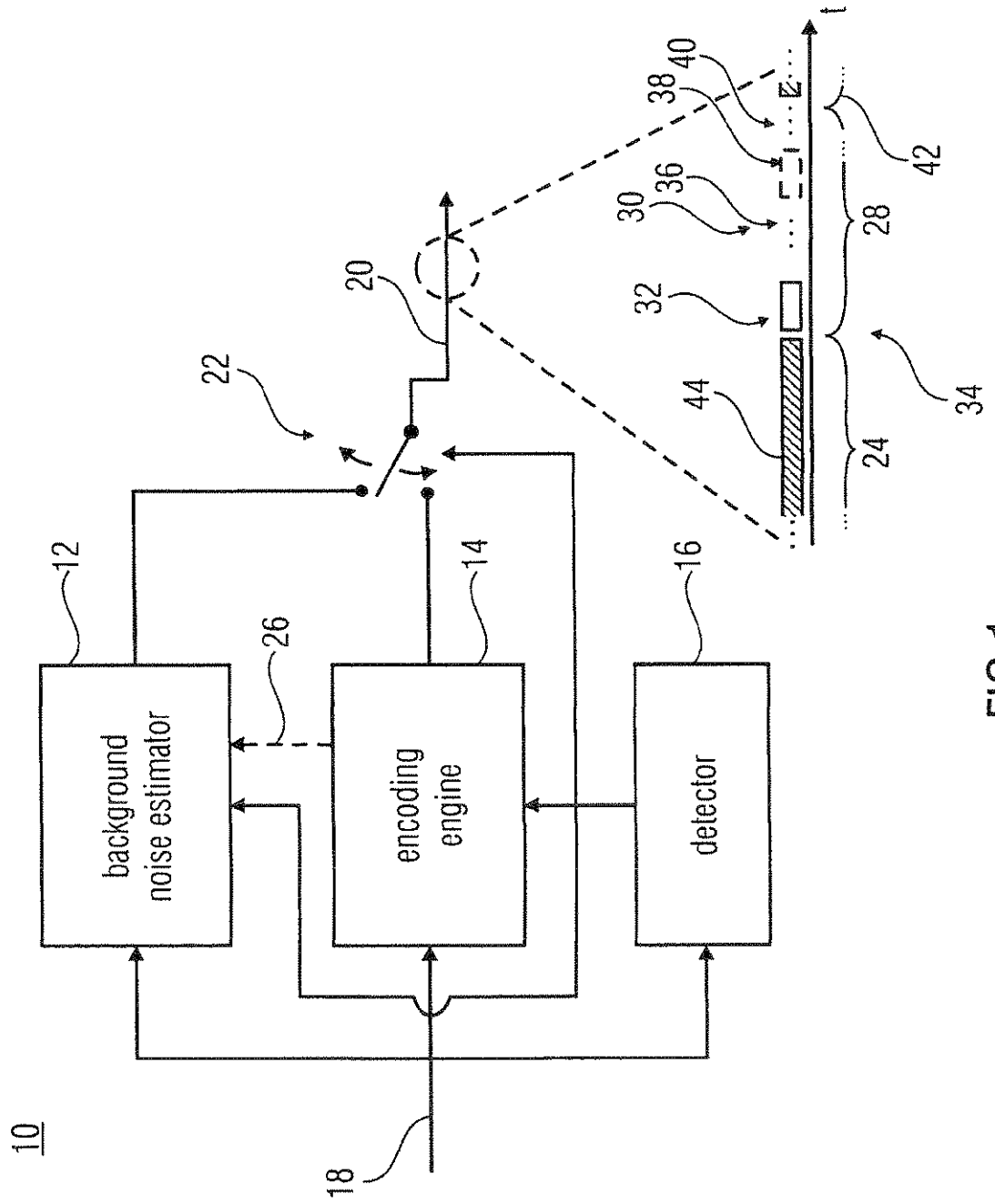
10
background noise estimator
encoding engine
detector
12
14
16
18
20
22
24
26
28
30
32
34
36
38
40
42
44
t

FIG 1

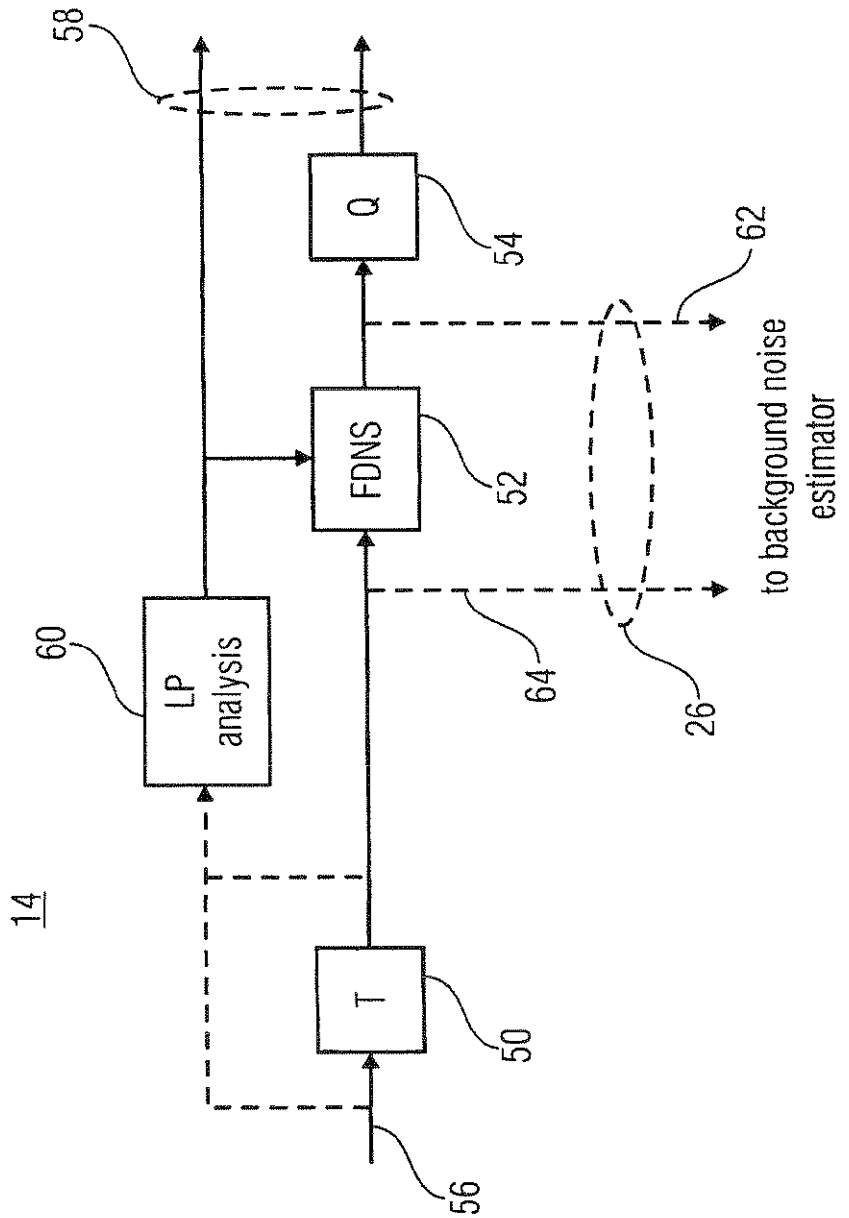
58
Q
54
62
FDNS
52
to background noise estimator
60
LP analysis
64
26
14
T
50
56

FIG 2

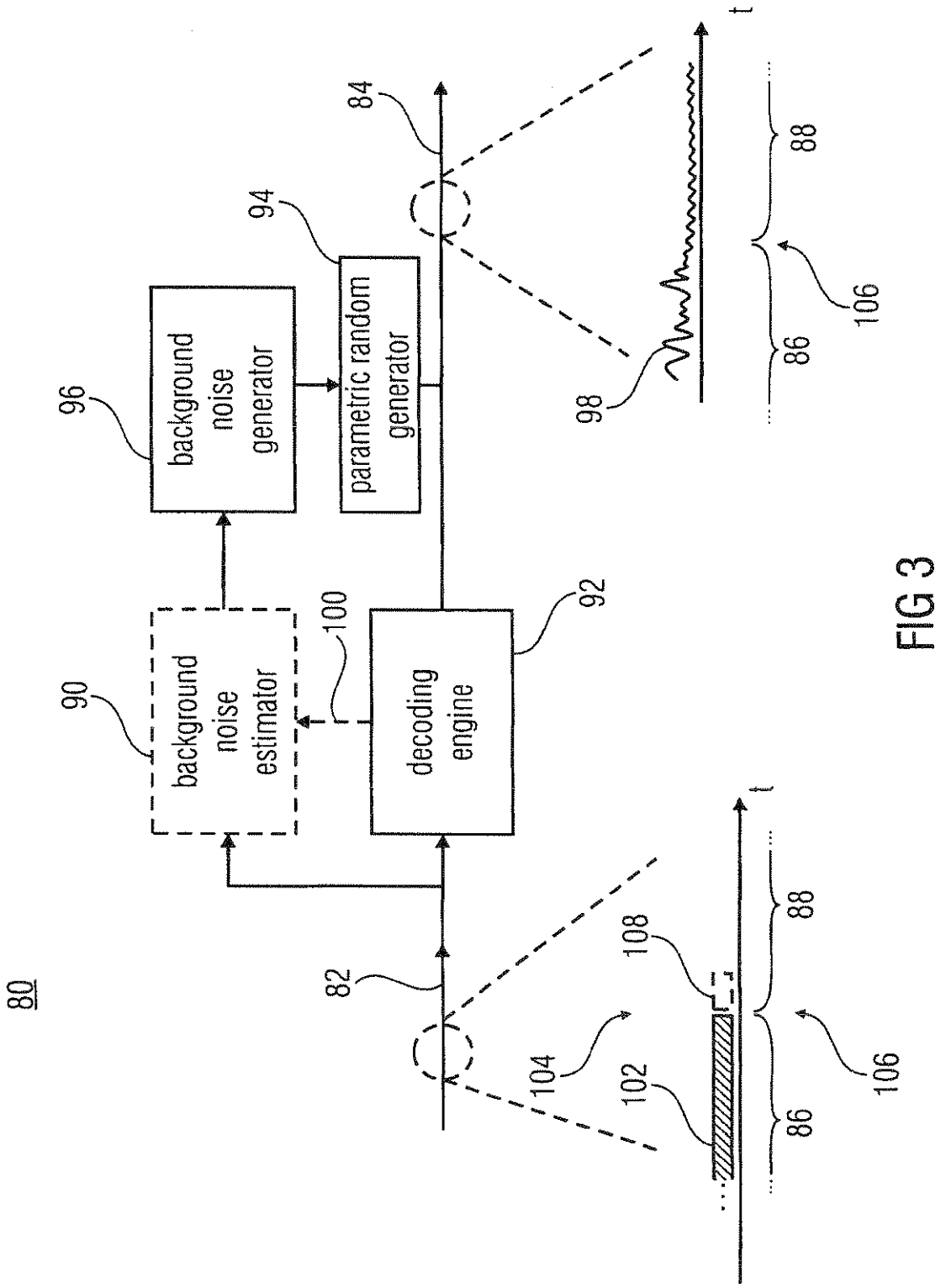
80
82
84
86
88
90
92
94
96
98
100
102
104
106
108
background noise estimator
decoding engine
parametric random generator
background noise generator
t

FIG 3

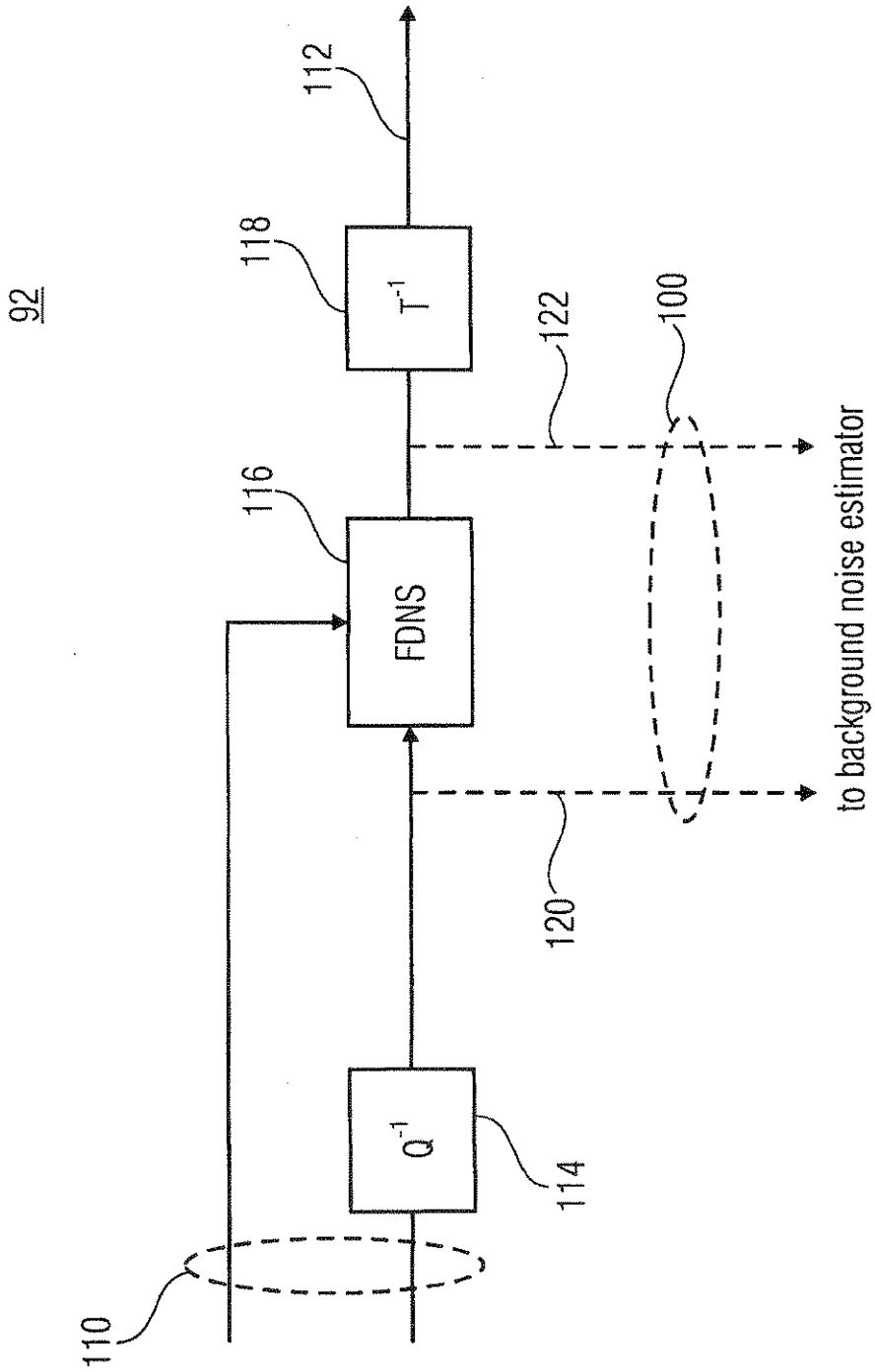
92
112
118
T^{-1}
122
100
116
FDNS
to background noise estimator
120
Q^{-1}
114
110

FIG 4

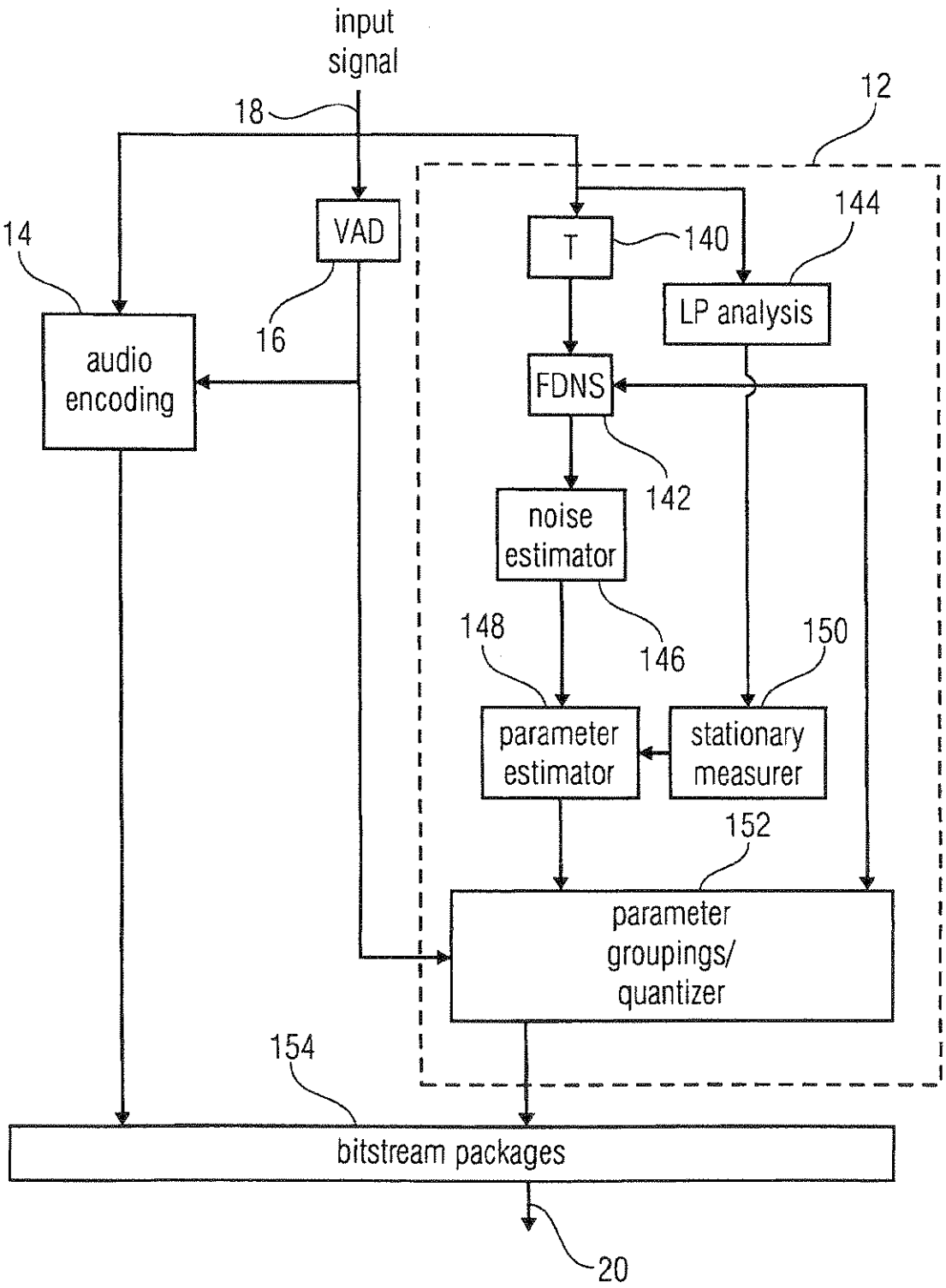
input signal
18
12
VAD
14
T
140
144
LP analysis
16
audio encoding
FDNS
142
noise estimator
148
146
150
parameter estimator
stationary measurer
152
parameter groupings/ quantizer
154
bitstream packages
20

FIG 5

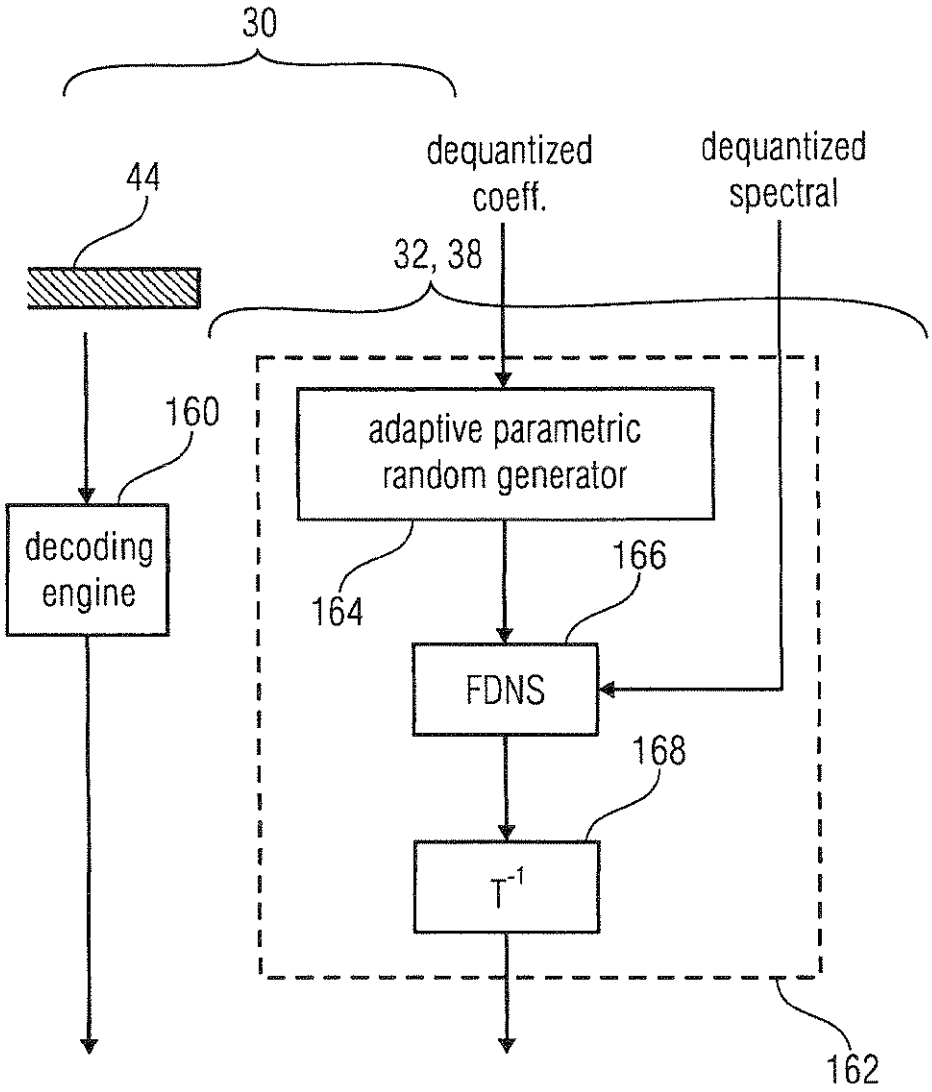
30
dequantized coeff.
dequantized spectral
44
32, 38
160
adaptive parametric random generator
decoding engine
164
166
FDNS
168
T^{-1}
162

FIG 6

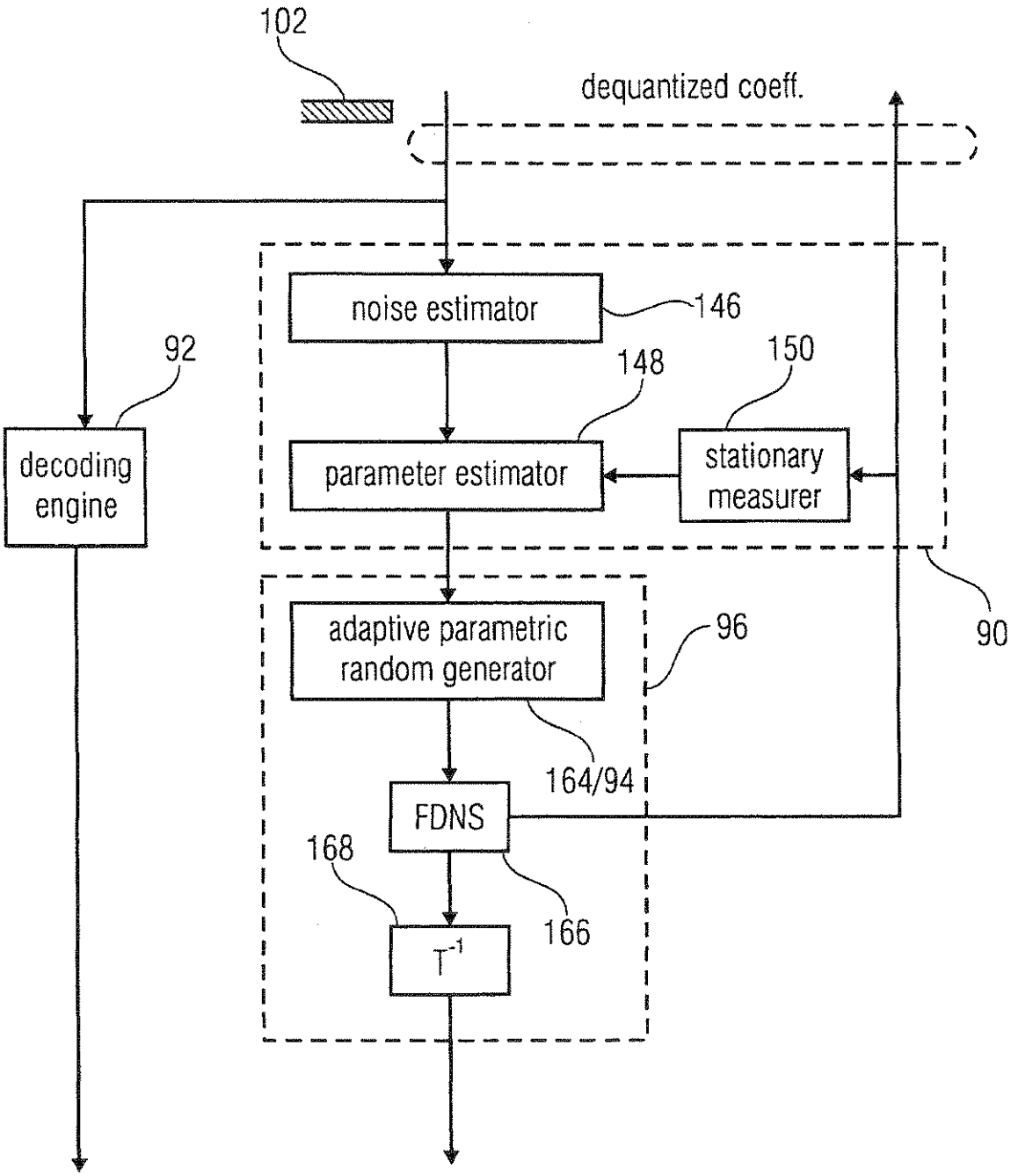
102
dequantized coeff.
noise estimator
146
92
148
150
decoding engine
parameter estimator
stationary measurer
90
adaptive parametric random generator
96
164/94
FDNS
168
166
T-1

FIG 7

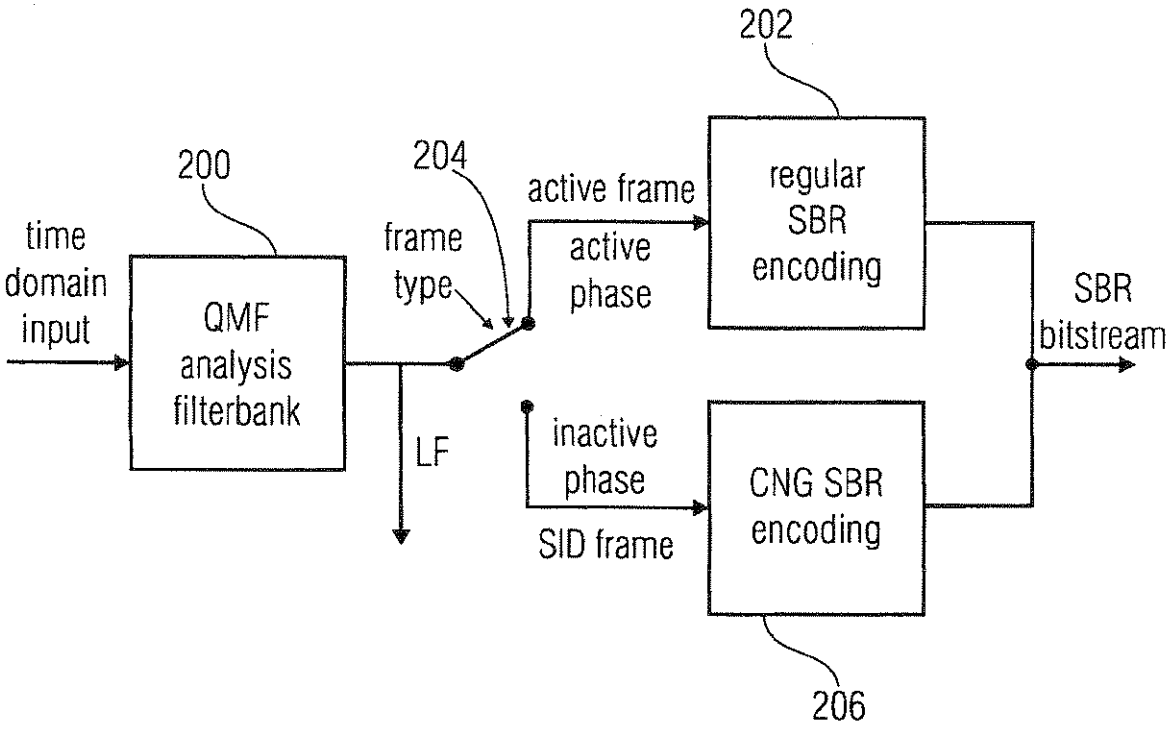
202
200
204
active frame
regular SBR encoding
time domain input
frame type
active phase
QMF analysis filterbank
SBR bitstream
LF
inactive phase
CNG SBR encoding
SID frame
206

FIG 8

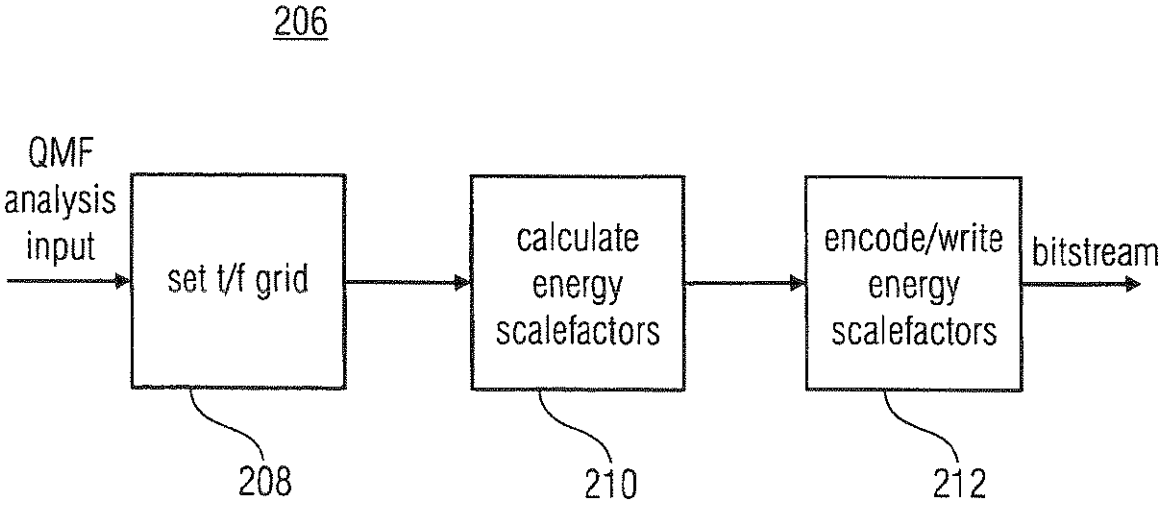
206
QMF analysis input
set t/f grid
calculate energy scalefactors
encode/write energy scalefactors
bitstream
208
210
212

FIG 9

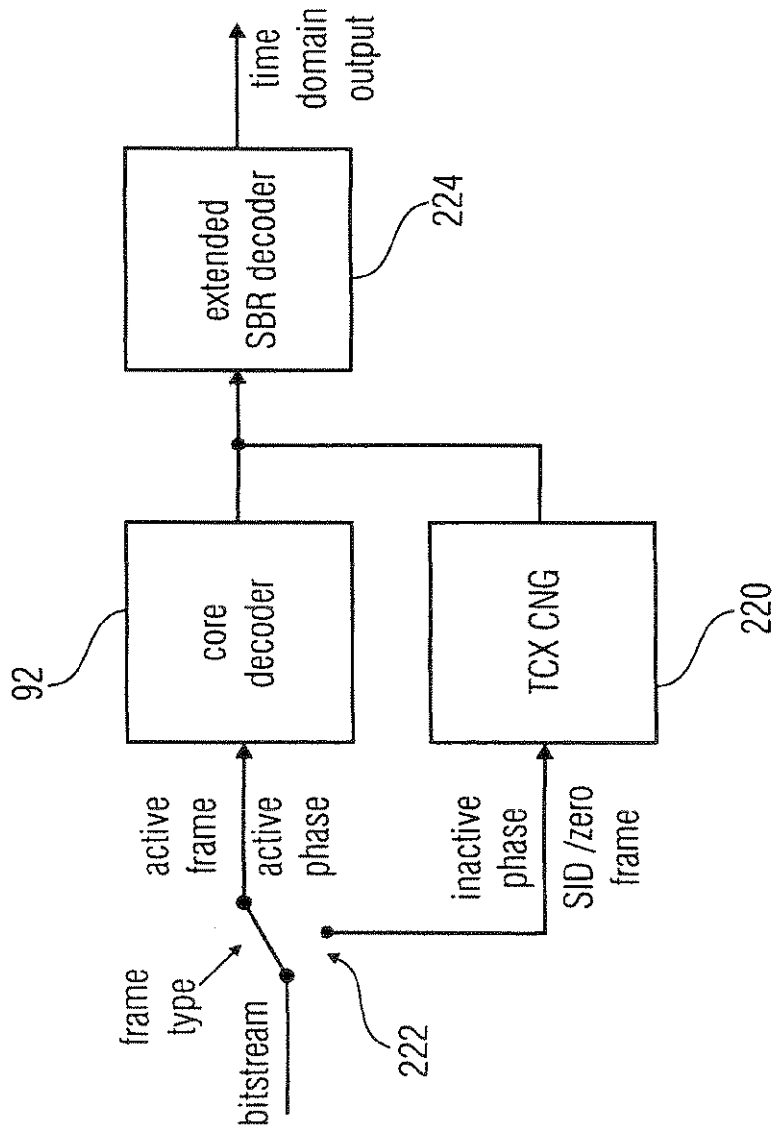
time domain output
extended SBR decoder
224
core decoder
92
TCX CNG
220
active frame
active phase
inactive phase
SID /zero frame
frame type
bitstream
222

FIG 10

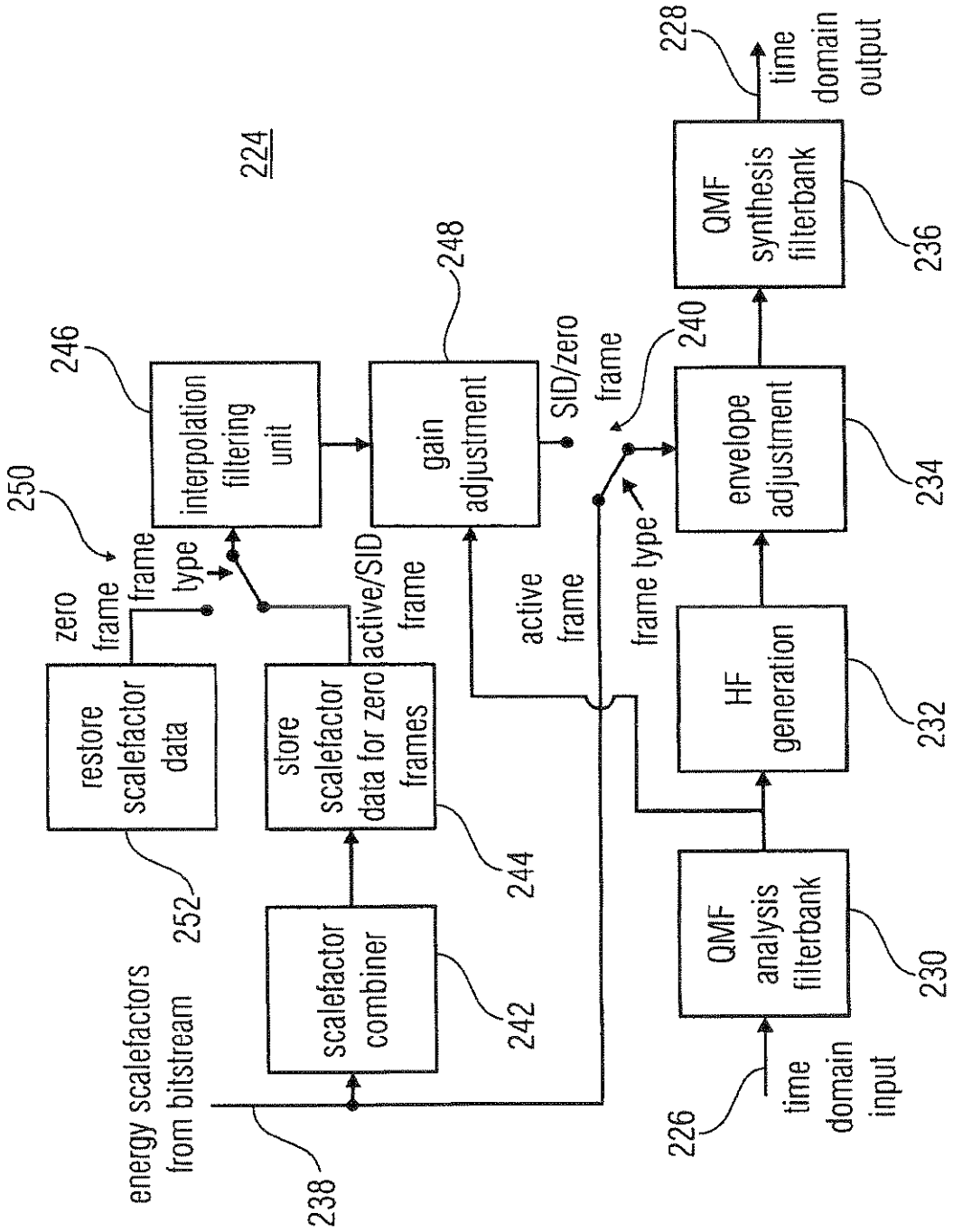
224
energy scalefactors from bitstream
238
restore scalefactor data
252
zero frame
frame type
250
interpolation filtering unit
246
store scalefactor data for zero frames
244
active/SID frame
scalefactor combiner
242
gain adjustment
248
active frame
SID/zero frame
240
frame type
envelope adjustment
234
HF generation
232
QMF analysis filterbank
230
time domain input
226
QMF synthesis filterbank
236
time domain output
228

FIG 11

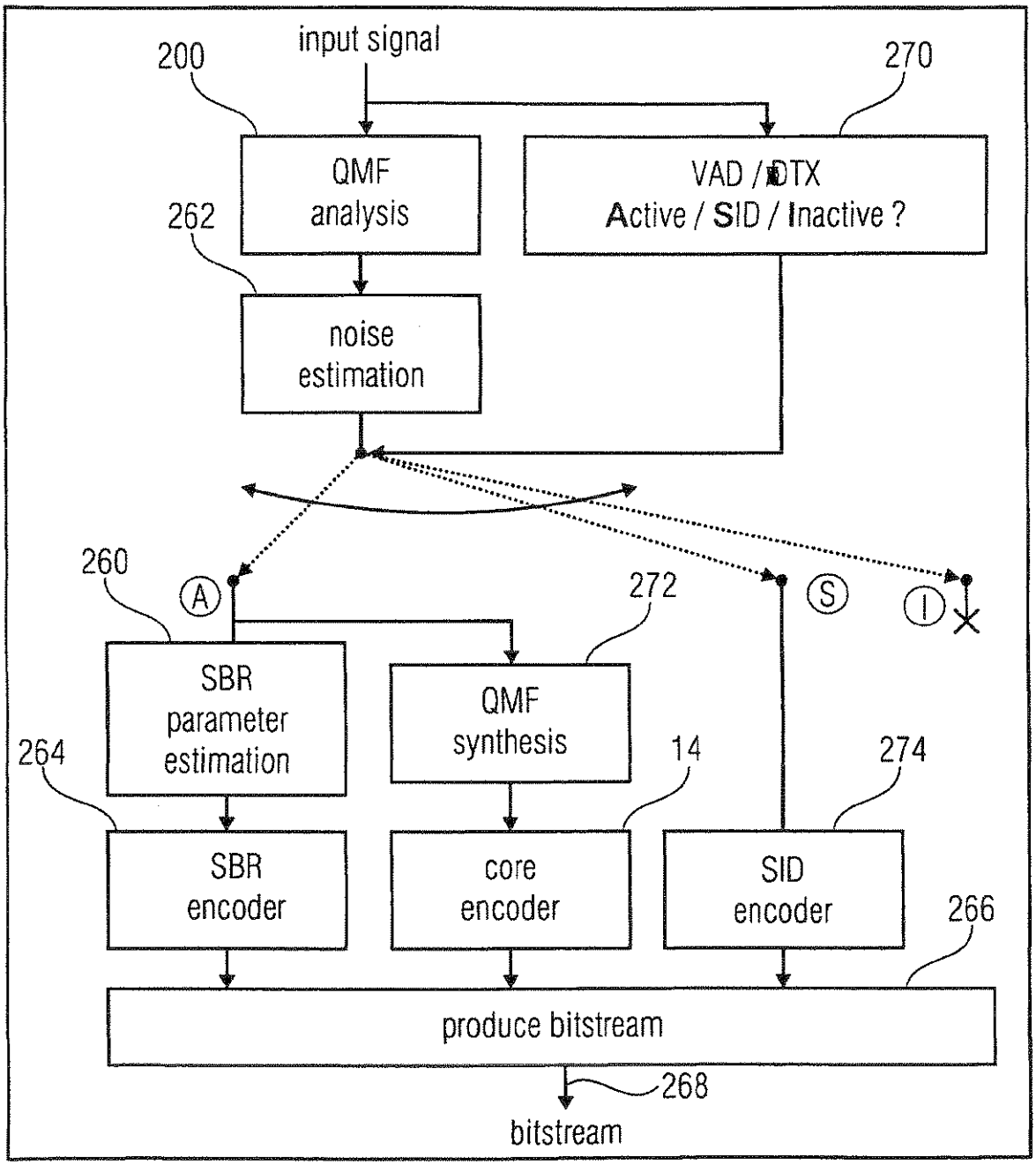
input signal
200
270
QMF analysis
VAD / DTX
Active / SID / Inactive ?
262
noise estimation
260
A
S
I
272
SBR parameter estimation
QMF synthesis
264
14
274
SBR encoder
core encoder
SID encoder
266
produce bitstream
268
bitstream

FIG 12

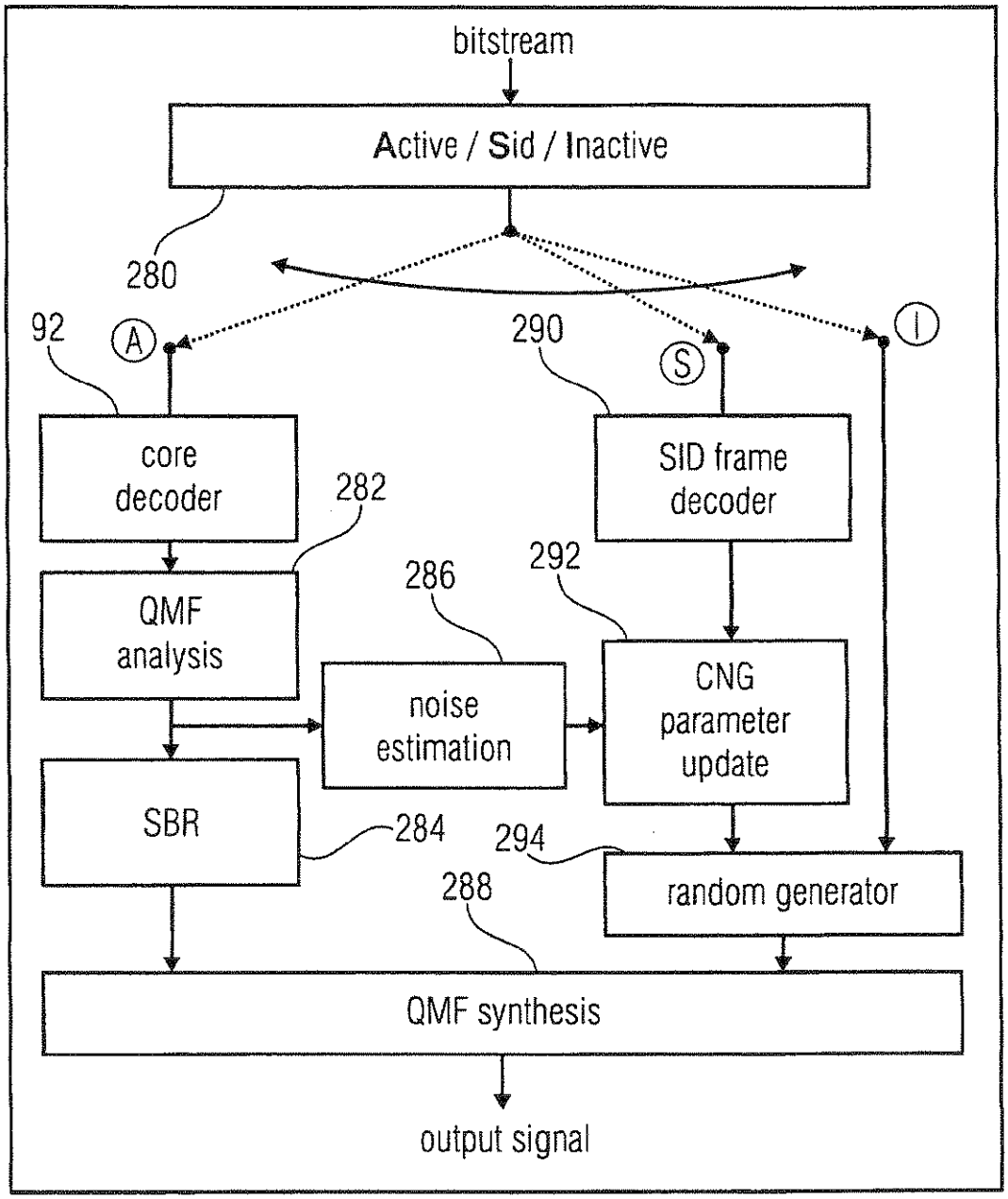
bitstream
Active / Sid / Inactive
280
92
A
290
S
I
core decoder
SID frame decoder
282
QMF analysis
286
292
noise estimation
CNG parameter update
SBR
284
294
random generator
288
QMF synthesis
output signal

FIG 13