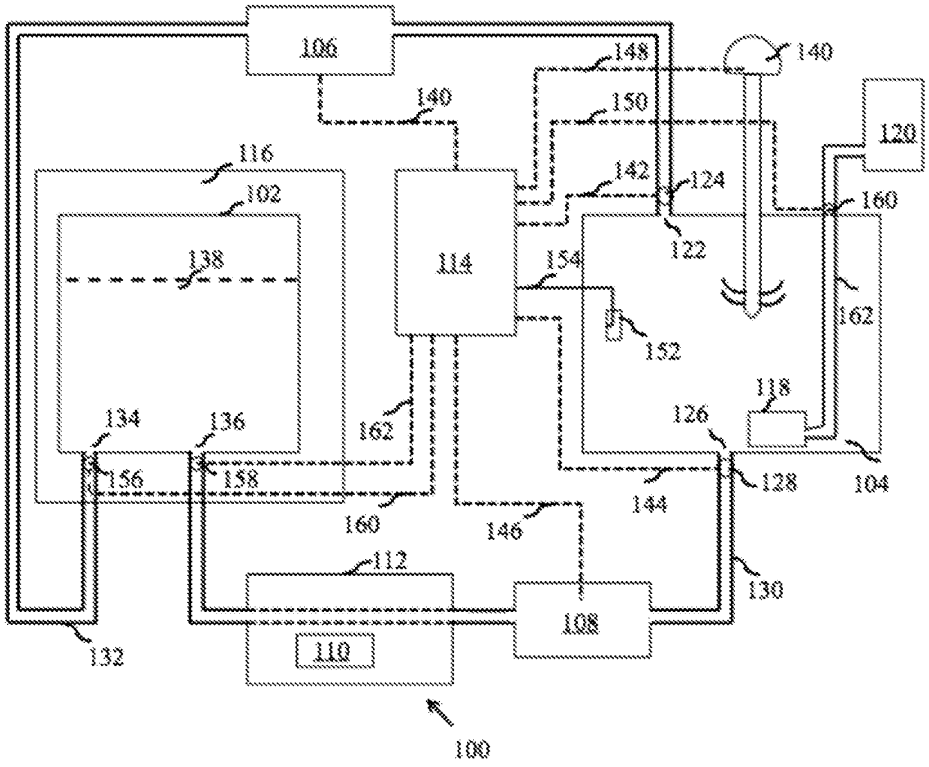
106
148
140
140
150
120
116
142
124
160
102
122
138
114
154
162
152
118
134
136
162
126
156
158
128
104
160
144
146
112
130
108
110
132
100

FIG. 1

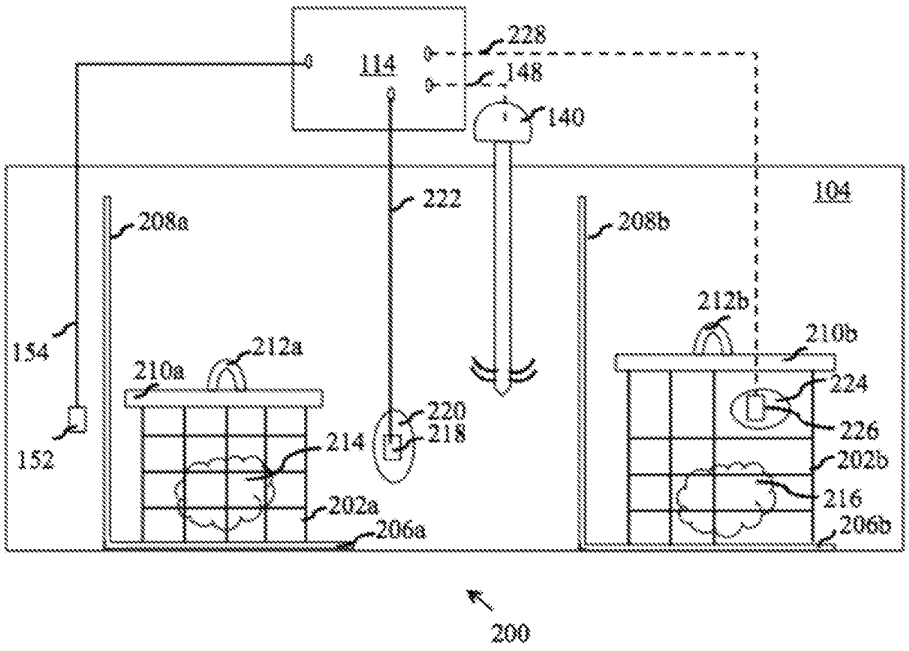
228
114
148
140
104
222
208a
208b
212b
210b
154
212a
210a
224
220
218
226
152
214
202b
216
202a
206b
206a
200

FIG. 2

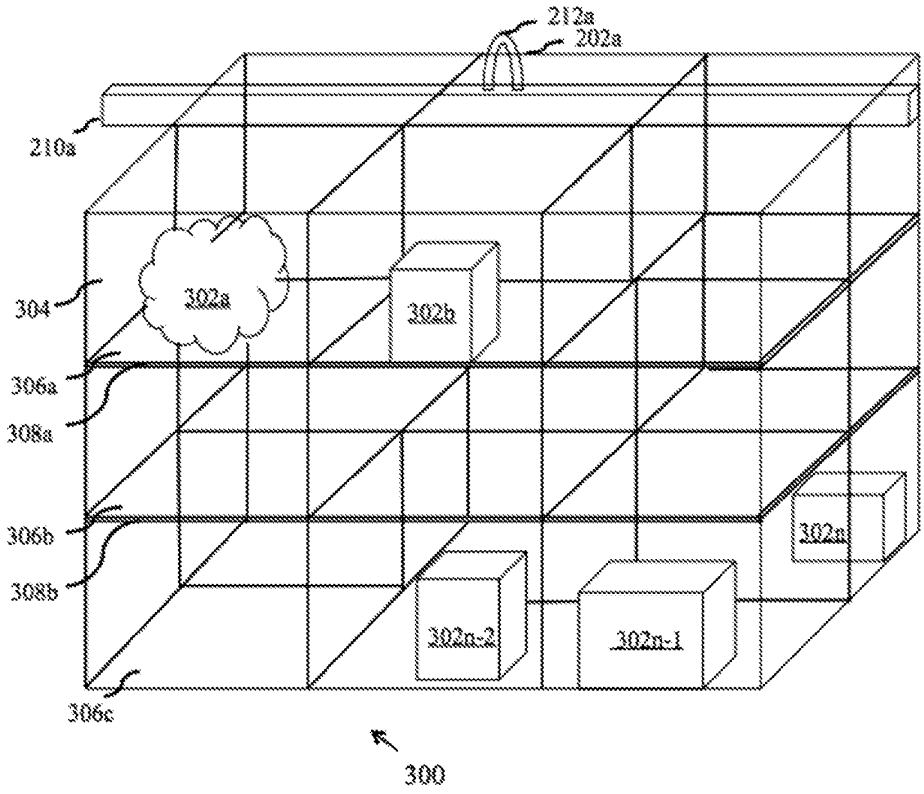
212a
202a
210a
304
302a
302b
306a
308a
306b
308b
302n
302n-2
302n-1
306c
300

FIG. 3

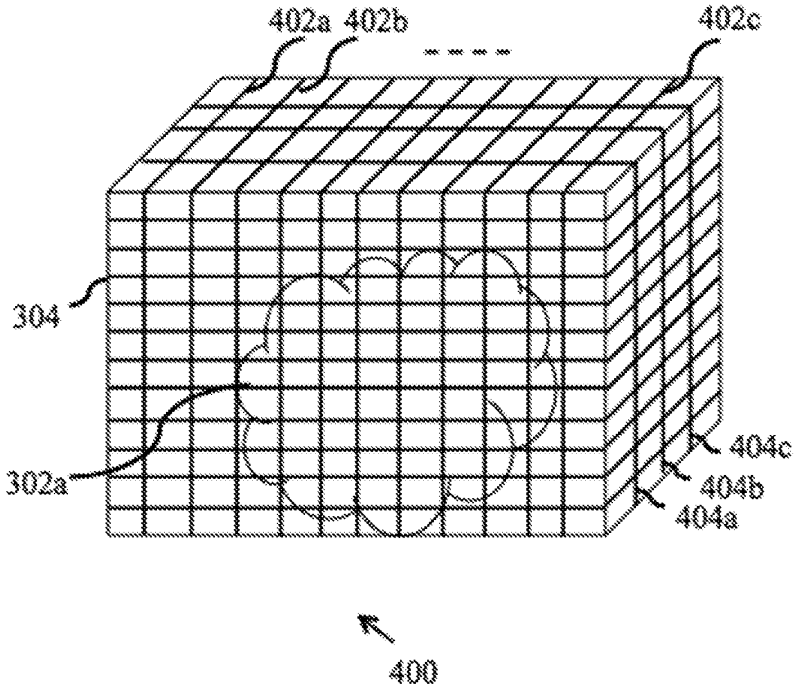

FIG. 4

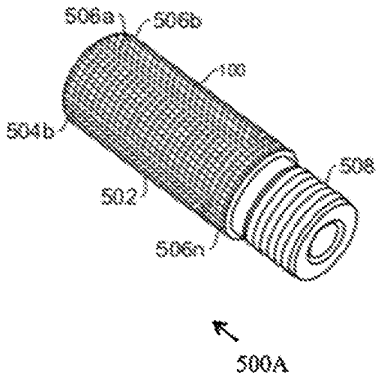
506a
506b
504b
502
506n
500A

FIG. 5A

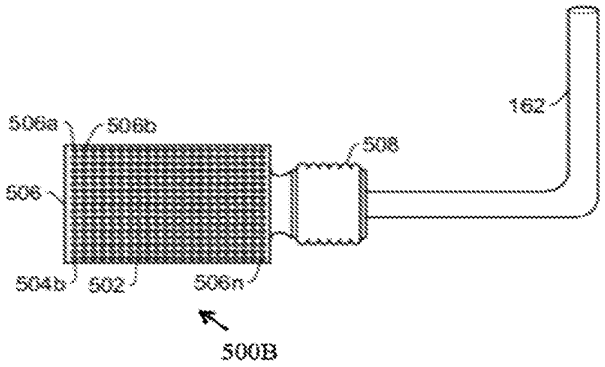
162
506a
506b
508
506
504b
502
506n
500B

FIG. 5B

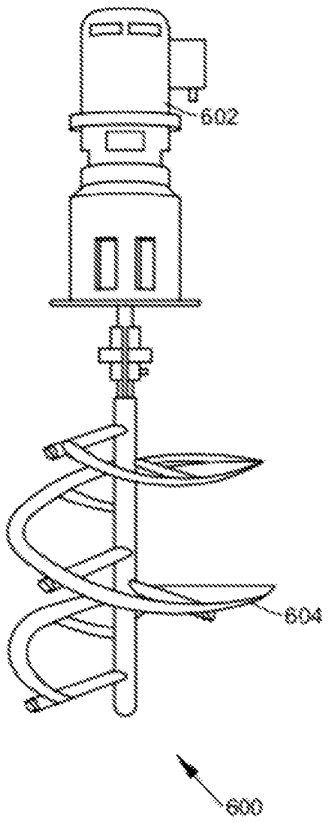

FIG. 6

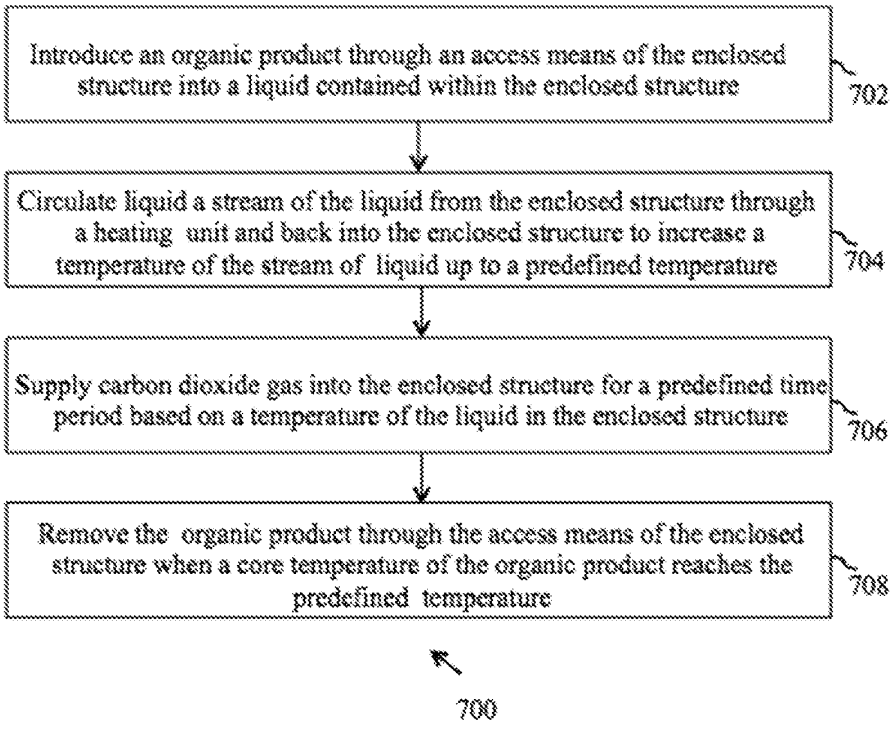
Introduce an organic product through an access means of the enclosed structure into a liquid contained within the enclosed structure
702
Circulate liquid a stream of the liquid from the enclosed structure through a heating unit and back into the enclosed structure to increase a temperature of the stream of liquid up to a predefined temperature
704
Supply carbon dioxide gas into the enclosed structure for a predefined time period based on a temperature of the liquid in the enclosed structure
706
Remove the organic product through the access means of the enclosed structure when a core temperature of the organic product reaches the predefined temperature
708
700

FIG. 7

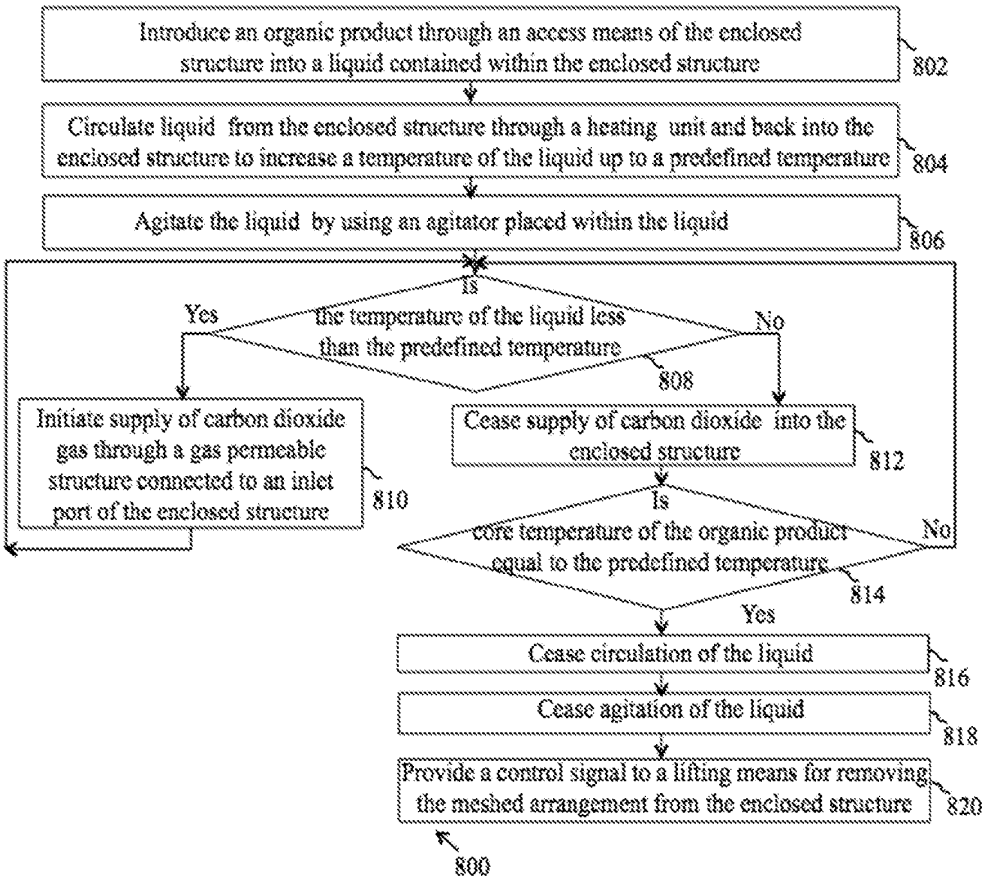
Introduce an organic product through an access means of the enclosed structure into a liquid contained within the enclosed structure
802
Circulate liquid from the enclosed structure through a heating unit and back into the enclosed structure to increase a temperature of the liquid up to a predefined temperature
804
Agitate the liquid by using an agitator placed within the liquid
806
Is the temperature of the liquid less than the predefined temperature
808
Yes
No
Initiate supply of carbon dioxide gas through a gas permeable structure connected to an inlet port of the enclosed structure
810
Cease supply of carbon dioxide into the enclosed structure
812
Is core temperature of the organic product equal to the predefined temperature
814
Yes
No
Cease circulation of the liquid
816
Cease agitation of the liquid
818
Provide a control signal to a lifting means for removing the meshed arrangement from the enclosed structure
820
800

FIG. 8