(12) INTERNATIONAL APPLICATION PUBLISHED UNDER THE PATENT COOPERATION TREATY (PCT)

(19) World Intellectual Property Organization
International Bureau

(43) International Publication Date
19 April 2012 (19.04.2012)

PCT

(10) International Publication Number
WO 2012/051167 A1

(51) International Patent Classification:
G02C 7/08 (2006.01)

(21) International Application Number:
PCT/US2011/055743

(22) International Filing Date:
11 October 2011 (11.10.2011)

(25) Filing Language: English

(26) Publication Language: English

(30) Priority Data:
61/391,782 11 October 2010 (11.10.2010) US

(72) Inventors; and
(71) Applicants : **EGAN, William** [US/US]; 2105 North Nowlin Trail, Jackson, WY 83001 (US). **NIBAUER, Lisa** [US/US]; 1 Crescent Place, Short Hills, NJ 07078 (US).

(74) Agents: **STERNE, Robert, Greene** et al.; STERNE, KESSLER, GOLDSTEIN & FOX P.L.L.C., 1100 New York., NW, Suite 800, Washington, DC 20005 (US).

(81) Designated States *(unless otherwise indicated, for every kind of national protection available)*: AE, AG, AL, AM, AO, AT, AU, AZ, BA, BB, BG, BH, BR, BW, BY, BZ, CA, CH, CL, CN, CO, CR, CU, CZ, DE, DK, DM, DO, DZ, EC, EE, EG, ES, FI, GB, GD, GE, GH, GM, GT, HN, HR, HU, ID, IL, IN, IS, JP, KE, KG, KM, KN, KP, KR, KZ, LA, LC, LK, LR, LS, LT, LU, LY, MA, MD, ME, MG, MK, MN, MW, MX, MY, MZ, NA, NG, NI, NO, NZ, OM, PE, PG, PH, PL, PT, QA, RO, RS, RU, RW, SC, SD, SE, SG, SK, SL, SM, ST, SV, SY, TH, TJ, TM, TN, TR, TT, TZ, UA, UG, US, UZ, VC, VN, ZA, ZM, ZW.

(84) Designated States *(unless otherwise indicated, for every kind of regional protection available)*: ARIPO (BW, GH, GM, KE, LR, LS, MW, MZ, NA, RW, SD, SL, SZ, TZ, UG, ZM, ZW), Eurasian (AM, AZ, BY, KG, KZ, MD, RU, TJ, TM), European (AL, AT, BE, BG, CH, CY, CZ, DE, DK, EE, ES, FI, FR, GB, GR, HR, HU, IE, IS, IT, LT, LU, LV, MC, MK, MT, NL, NO, PL, PT, RO, RS, SE, SI, SK, SM, TR), OAPI (BF, BJ, CF, CG, CI, CM, GA, GN, GQ, GW, ML, MR, NE, SN, TD, TG).

Published:

— *with international search report (Art. 21(3))*

— *before the expiration of the time limit for amending the claims and to be republished in the event of receipt of amendments (Rule 48.2(h))*

(54) **Title**: FLUID FILLED ADJUSTABLE CONTACT LENSES

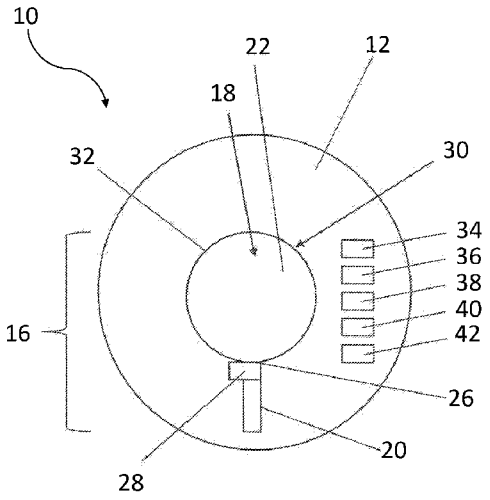

FIG. 1

(57) **Abstract**: A fluid-filled adjustable contact lens is provided. An exemplary contact lens includes a lens chamber configured to be positioned on a pupil of a user wearing the contact lens; a reservoir fluidly connected to the lens chamber; an actuator configured to transfer fluid back and forth between the lens chamber and the reservoir; a sensor configured to sense movement from the user and transmit a control signal when a predetermined movement is performed by the user; and a processor configured to actuate the actuator upon receipt of the control signal from the sensor.

WO 2012/051167 A1