[FIG. 2]

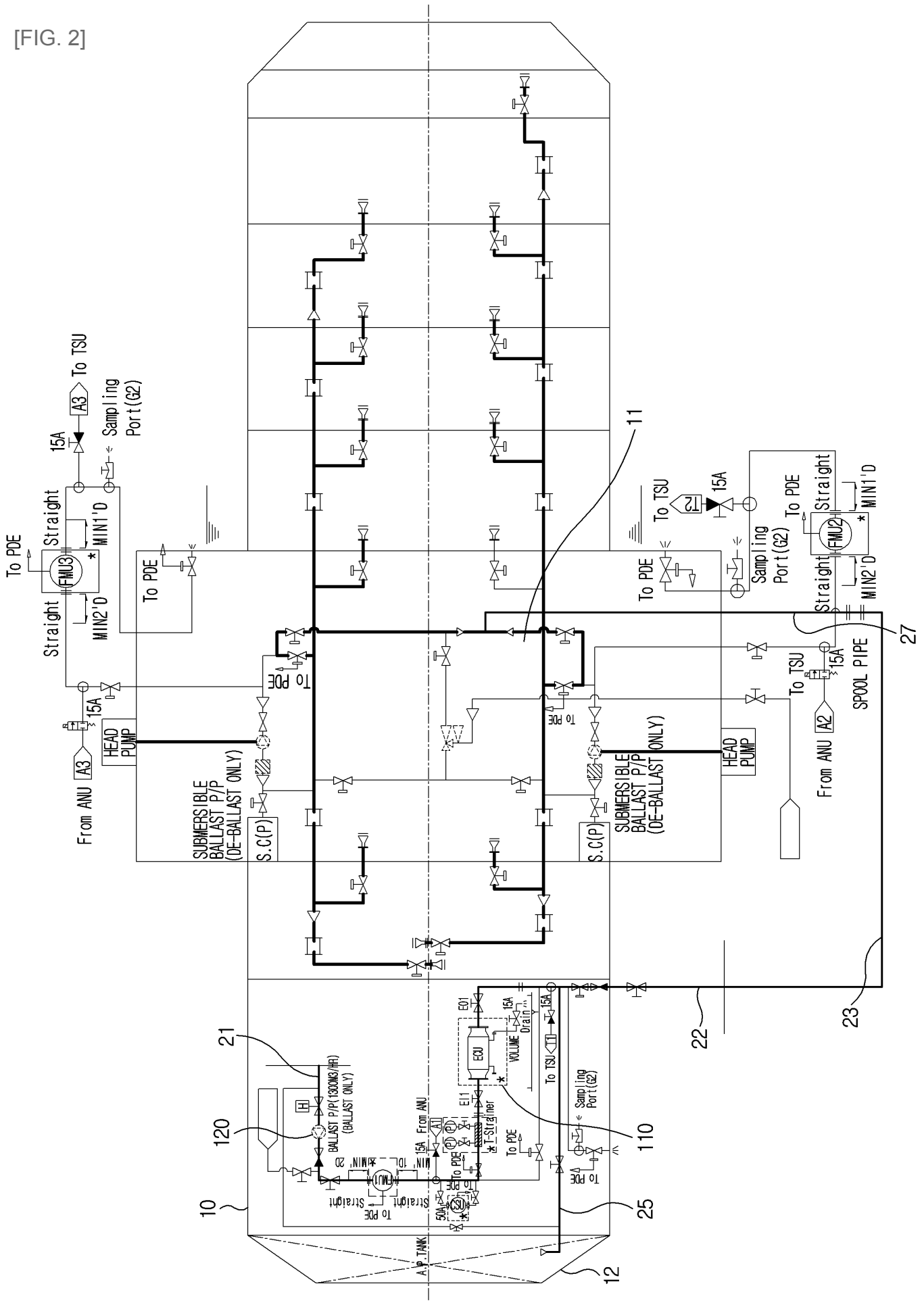

To TSU
A3
Sampling Port(G2)
15A
Straight
MIN1'D
To PDE
FMU3
MIN2'D
To PDE
11
To TSU
T2
15A
To PDE
Sampling Port(G2)
Straight
MIN1'D
FMU2
MIN2'D
27
To PDE
To PDE
15A
HEAD PUMP
From ANU
A3
SUBMERSIBLE BALLAST P/P (DE-BALLAST ONLY)
S.C(P)
To PDE
SUBMERSIBLE BALLAST P/P (DE-BALLAST ONLY)
S.C(P)
HEAD PUMP
To TSU
15A
SPOOL PIPE
From ANU
A2
23
22
21
120
BALLAST P/P(1300M3/HR) (BALLAST ONLY)
H
From ANU
A1
T-Strainer
ECU
VOLUME
Drain
To TSU
T1
Sampling Port(G2)
110
To PDE
To PDE
To PDE
To PDE
Straight
Straight
FMU1
MIN' 2D
MIN' 1D
15A
50A
10
25
A.P.TANK
12

[FIG. 3]

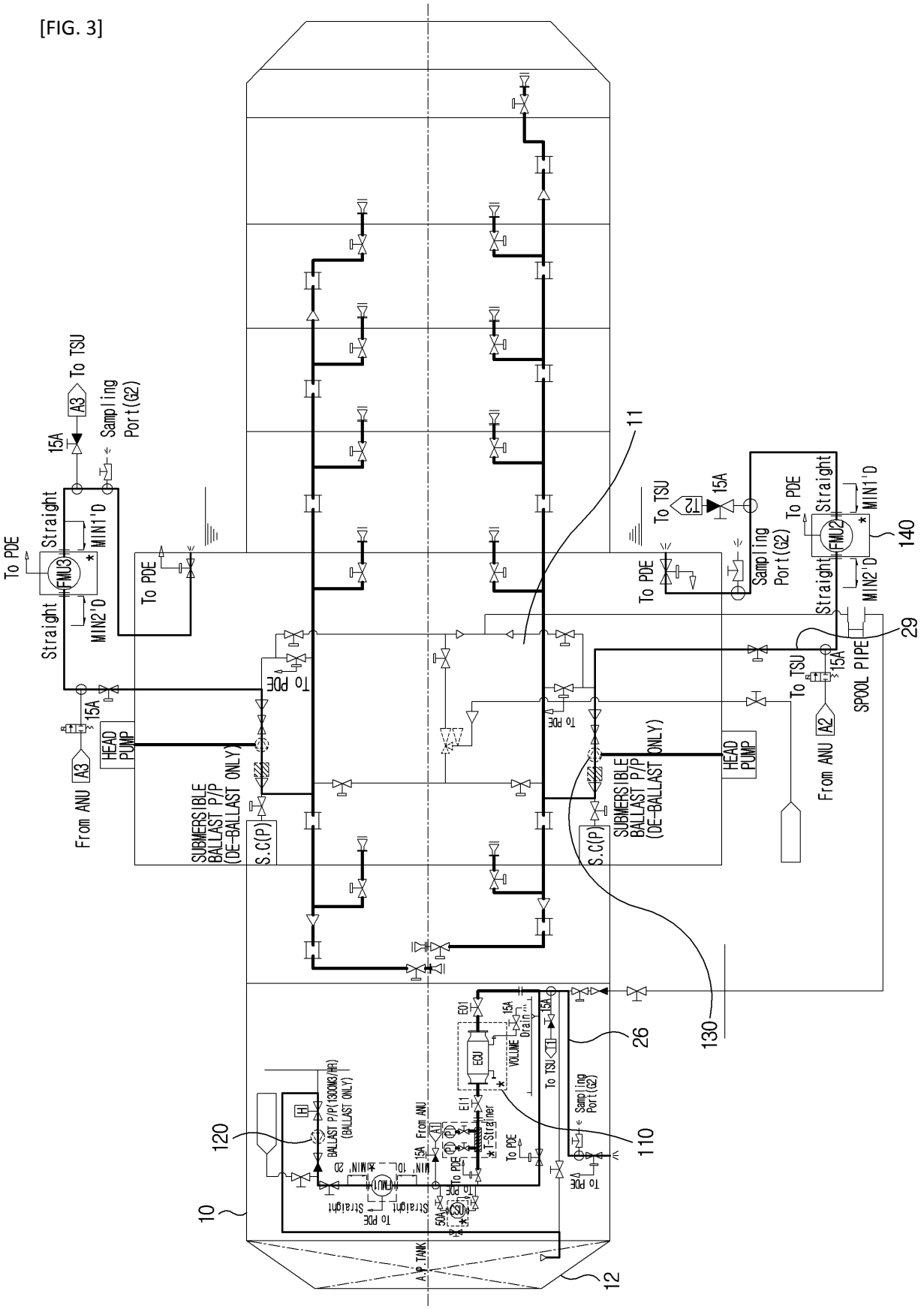
To TSU
A3
Sampling Port(G2)
15A
Straight
MIN1'D
To PDE
FMU3
MIN2'D
To PDE
To PDE
15A
HEAD PUMP
From ANU A3
SUBMERSIBLE BALLAST P/P (DE-BALLAST ONLY)
S.C(P)
11
To TSU
T2
15A
To PDE
Sampling Port(G2)
To PDE
Straight
MIN1'D
FMU2
MIN2'D
140
29
To TSU
15A
SPOOL PIPE
From ANU A2
To PDE
SUBMERSIBLE BALLAST P/P (DE-BALLAST ONLY)
HEAD PUMP
S.C(P)
130
26
E01
15A
Drain
ECU
VOLUME
To TSU
Sampling Port(G2)
110
120
BALLAST P/P(1300M3/HR) (BALLAST ONLY)
From ANU
A1
T-Strainer
To PDE
To PDE
To PDE
Straight
Straight
To PDE
10
A.P.TANK
12

[FIG. 4]

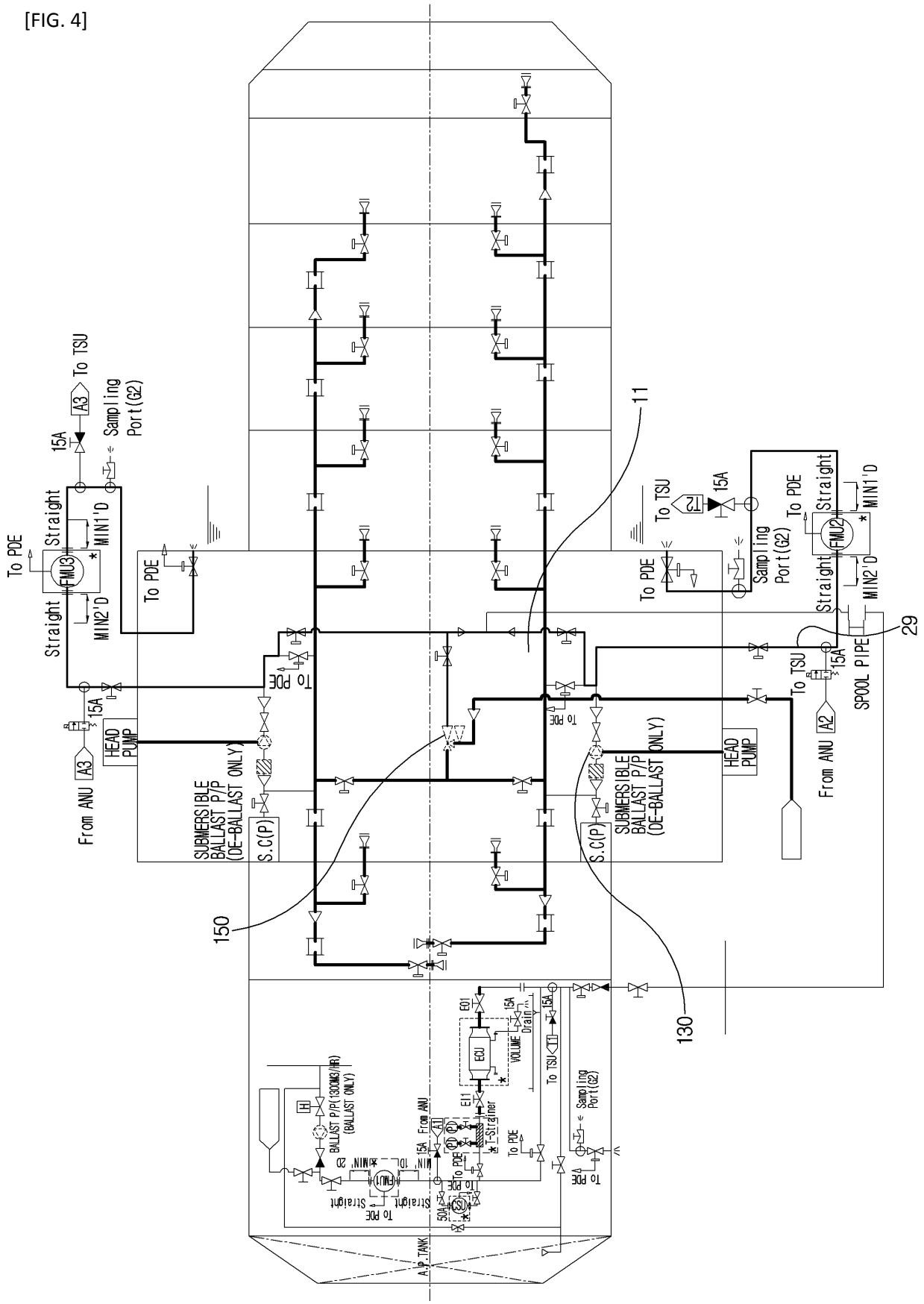
To TSU
A3
Sampling Port(G2)
15A
Straight
MIN1'D
To PDE
FMU3
MIN2'D
To PDE
11
To TSU
T2
15A
To PDE
Sampling Port(G2)
Straight
MIN1'D
FMU2
MIN2'D
29
SPOOL PIPE
To TSU
15A
A2
From ANU
HEAD PUMP
SUBMERSIBLE BALLAST P/P (DE-BALLAST ONLY)
S.C(P)
150
130
BALLAST P/P(130CM3/HR) (BALLAST ONLY)
H
From ANU
A1
T-Strainer
ECU
VOLUME
Drain
To TSU
T1
Sampling Port(G2)
To PDE
A.P.TANK

【Fig. 2】

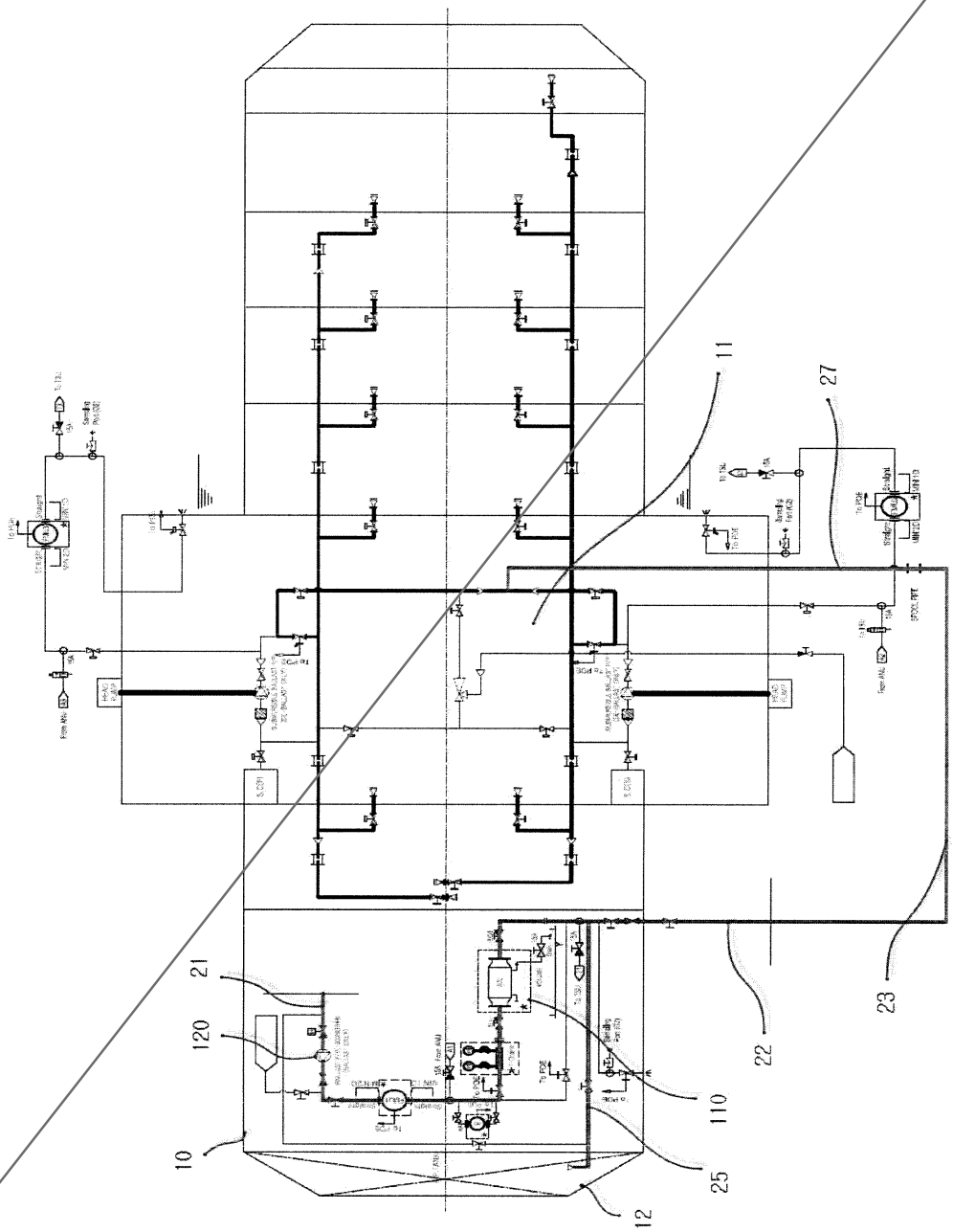

【Fig. 3】

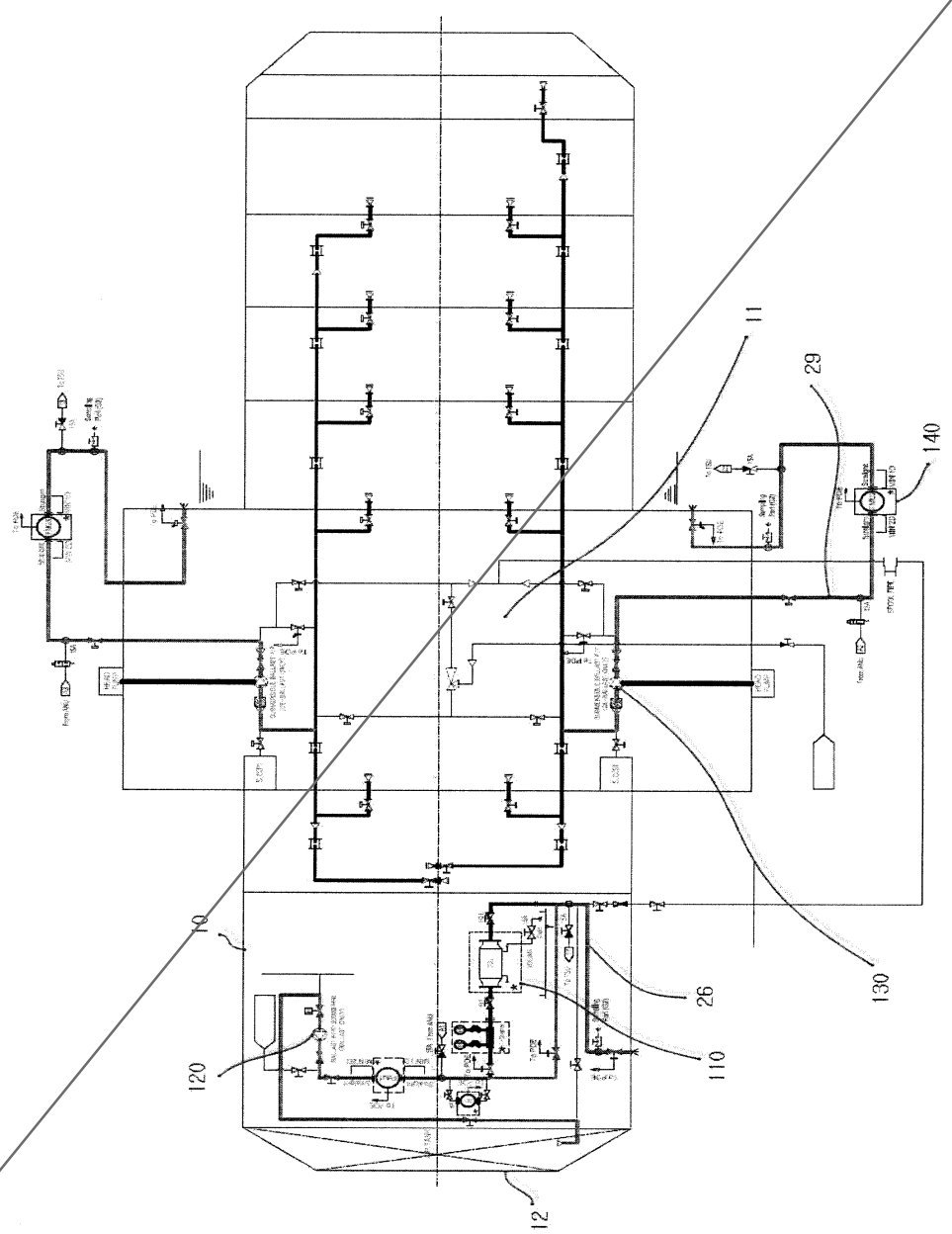

【Fig. 4】

