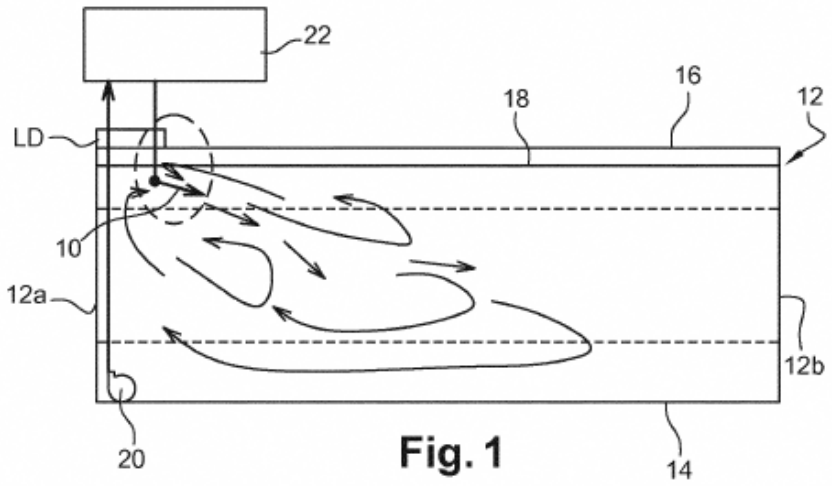

Fig. 1

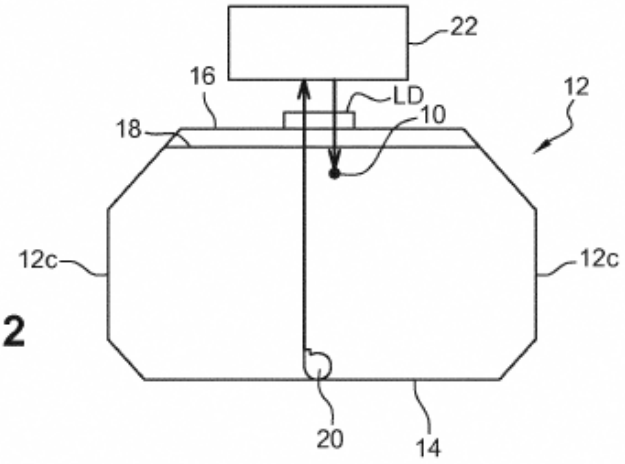

Fig. 2

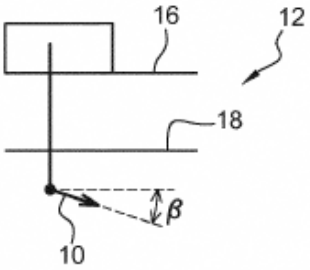

Fig. 3

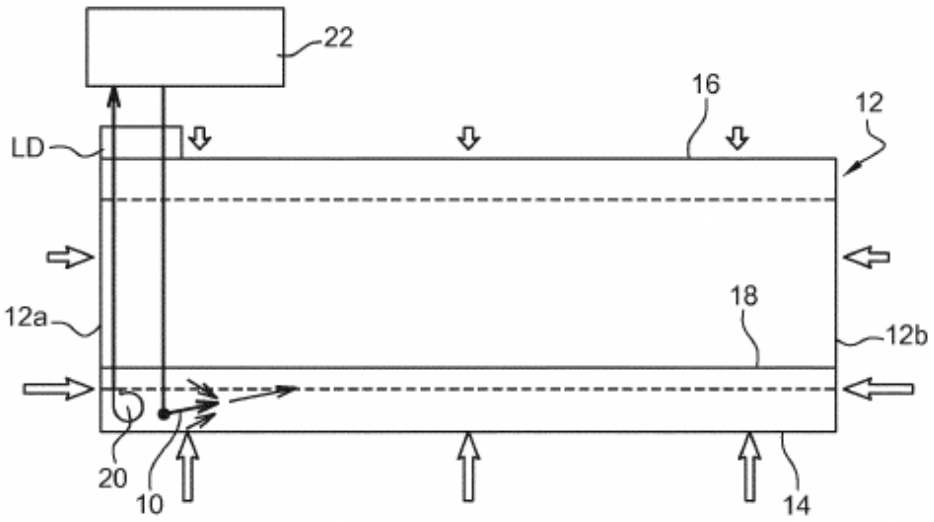

Fig. 4

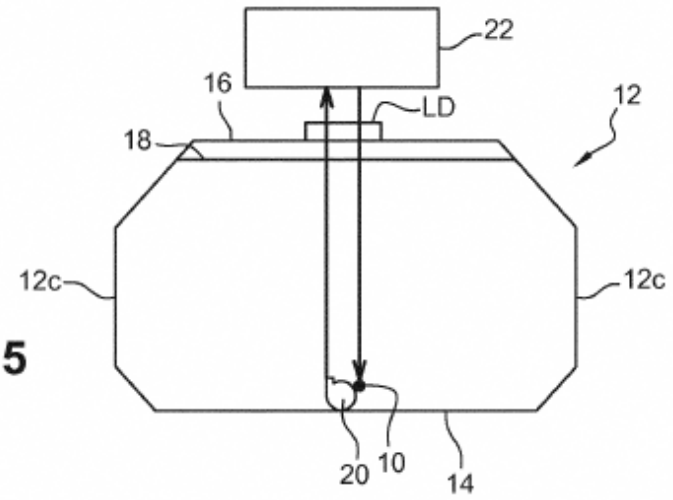

Fig. 5

Fig. 6

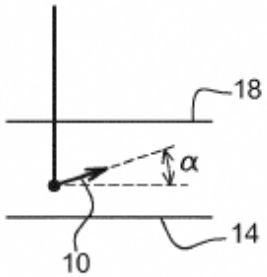

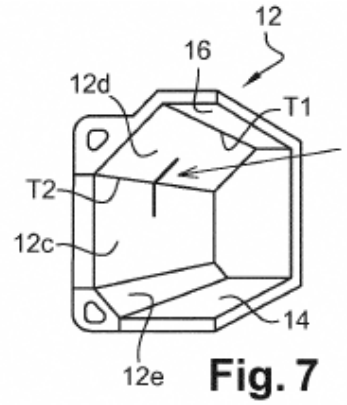

Fig. 7

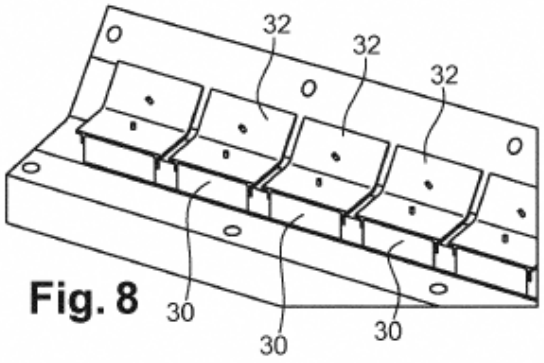

Fig. 8

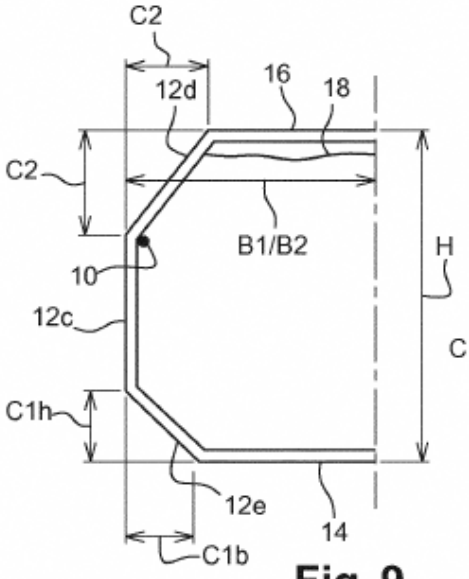

Fig. 9

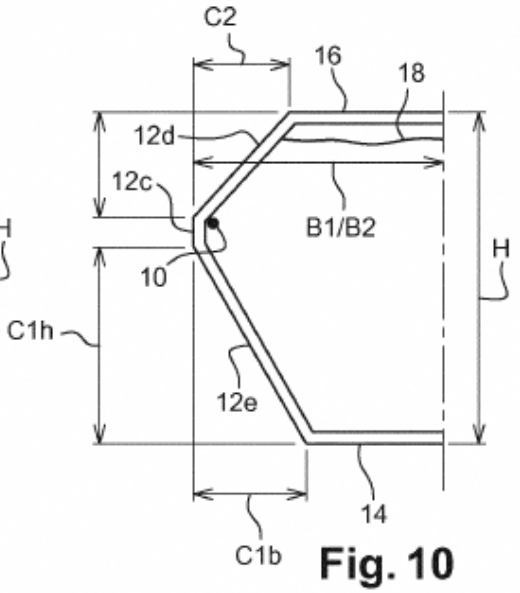

Fig. 10

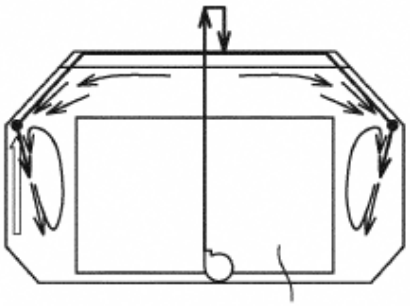

Fig. 11

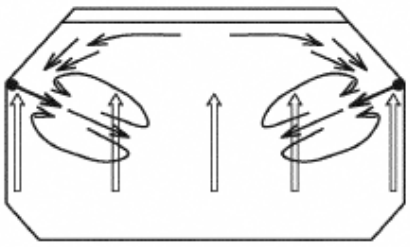

Fig. 12

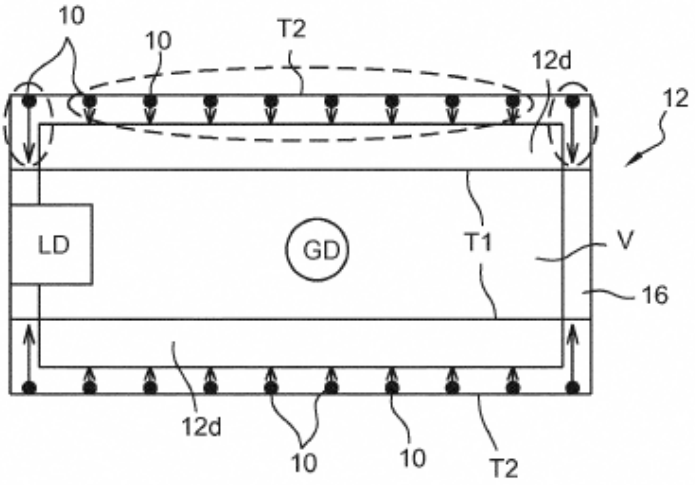

Fig. 13

Fig. 14

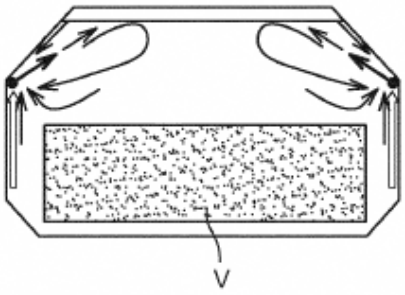

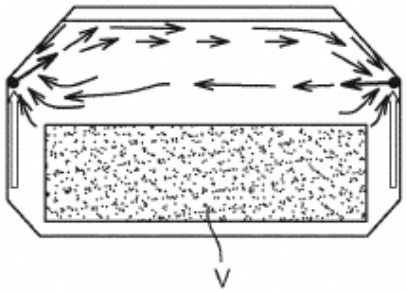

Fig. 15

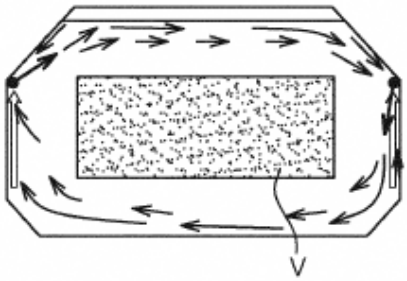

Fig. 16

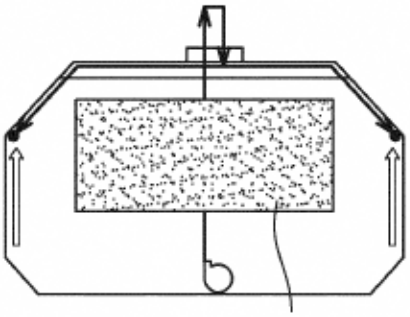

Fig. 17

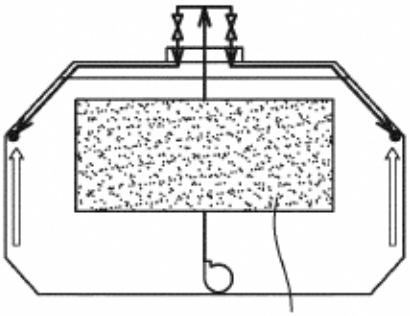

Fig. 18

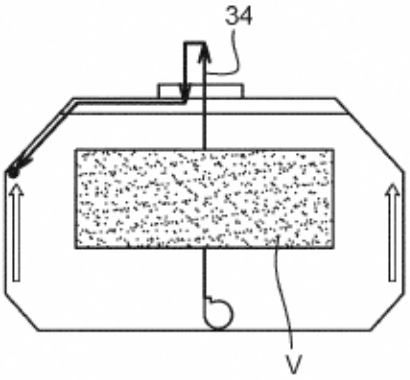

Fig. 19

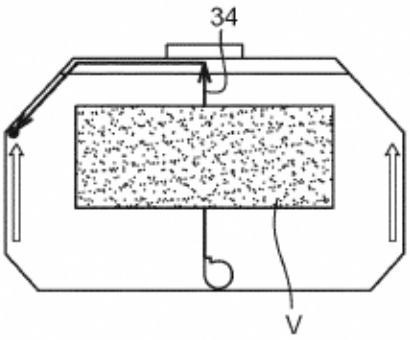

Fig. 20

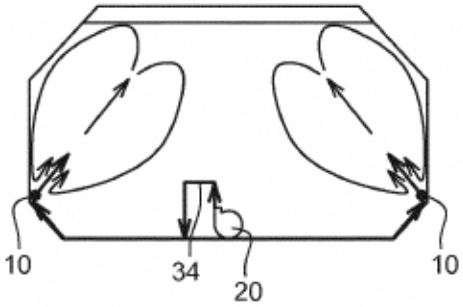

Fig. 21

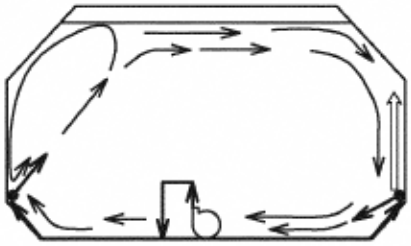

Fig. 22

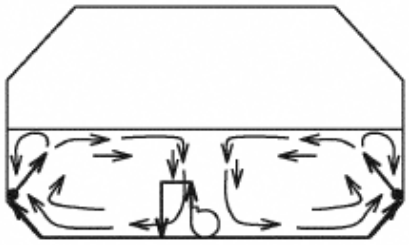

Fig. 23

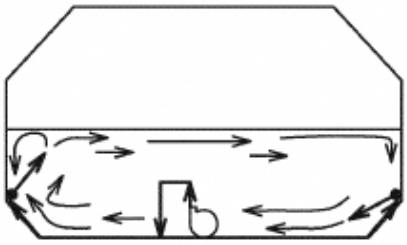

Fig. 24

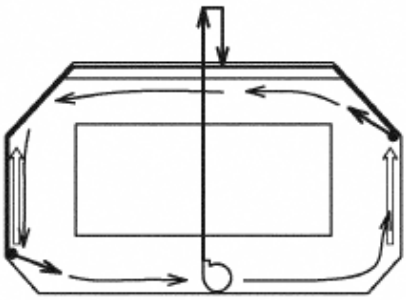

Fig. 25

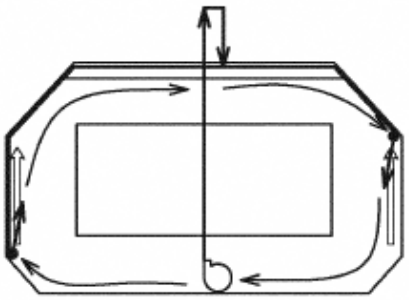

Fig. 26

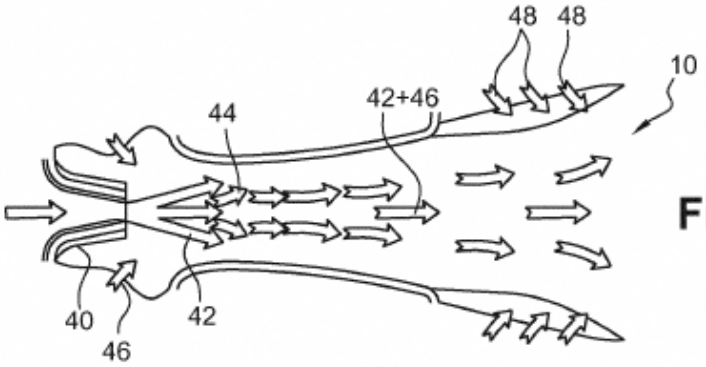

Fig. 27

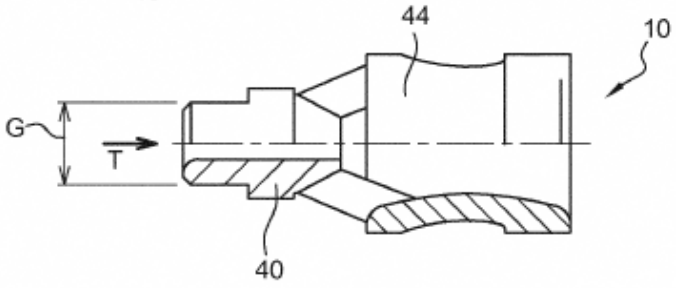

Fig. 28

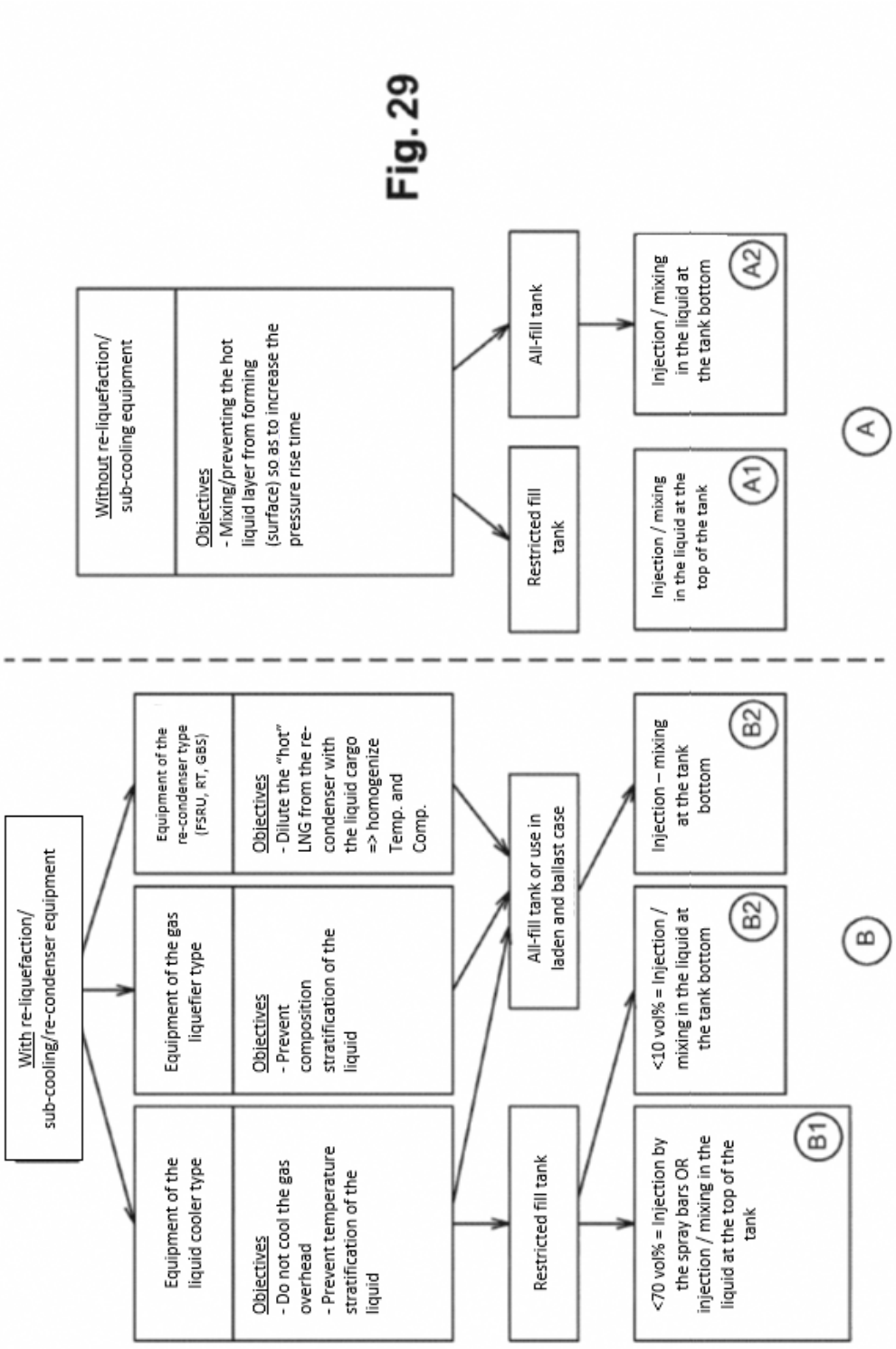
Without re-liquefaction/ sub-cooling equipment
Objectives
- Mixing/preventing the hot liquid layer from forming (surface) so as to increase the pressure rise time
Restricted fill tank
All-fill tank
Injection / mixing in the liquid at the top of the tank
Injection / mixing in the liquid at the tank bottom
A1
A2
A
With re-liquefaction/ sub-cooling/re-condenser equipment
Equipment of the liquid cooler type
Objectives
- Do not cool the gas overhead
- Prevent temperature stratification of the liquid
Equipment of the gas liquefier type
Objectives
- Prevent composition stratification of the liquid
Equipment of the re-condenser type (FSRU, RT, GBS)
Objectives
- Dilute the "hot" LNG from the re-condenser with the liquid cargo => homogenize Temp. and Comp.
Restricted fill tank
All-fill tank or use in laden and ballast case
<70 vol% = Injection by the spray bars OR injection / mixing in the liquid at the top of the tank
<10 vol% = Injection / mixing in the liquid at the tank bottom
Injection – mixing at the tank bottom
B1
B2
B2
B

Fig. 29

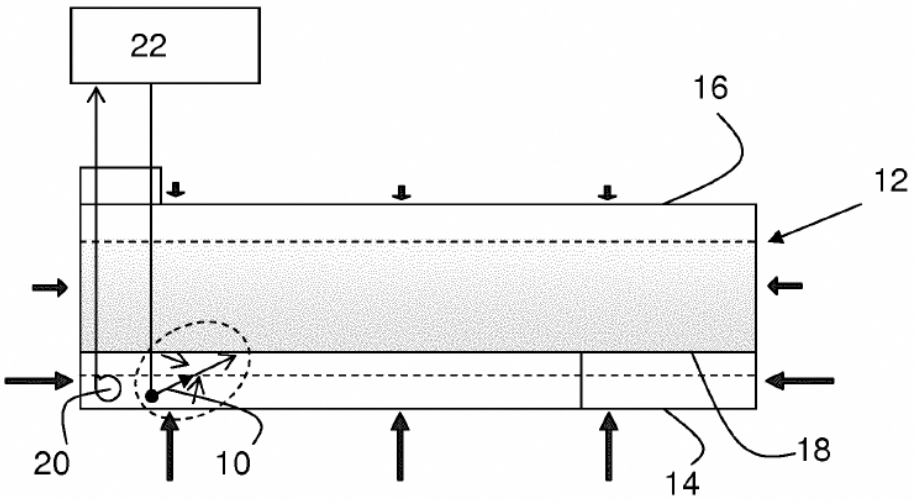

Fig. 30

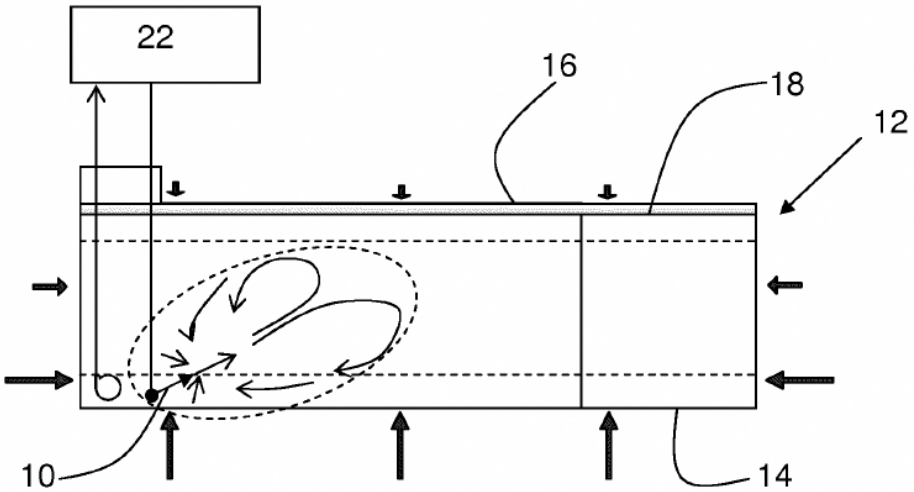

Fig. 31