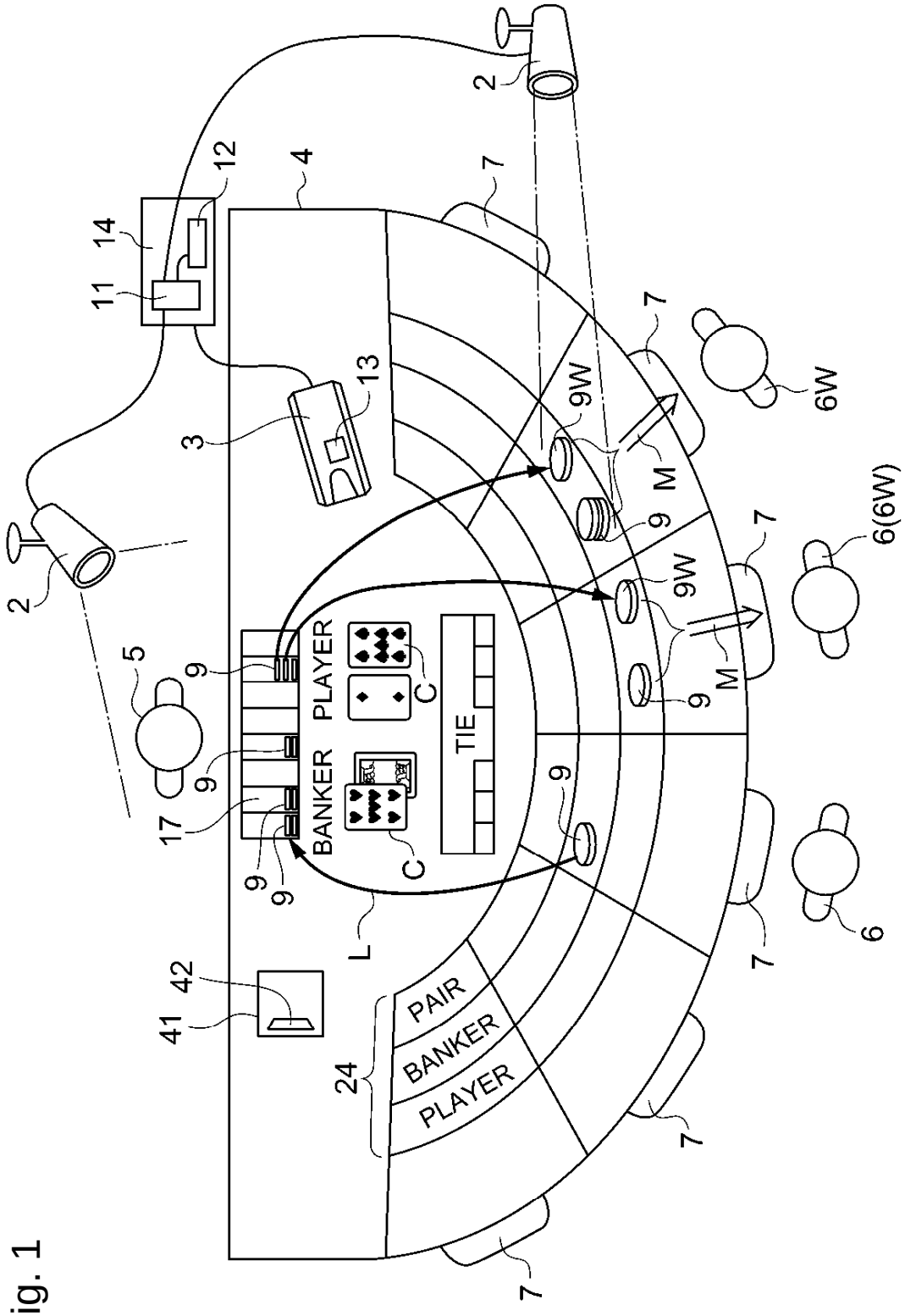
2
2
3
4
5
6
6(6W)
6W
7
9
9W
11
12
13
14
17
24
41
42
L
M
C
BANKER
PLAYER
TIE
PAIR
BANKER
PLAYER

Fig. 1

Fig. 2A

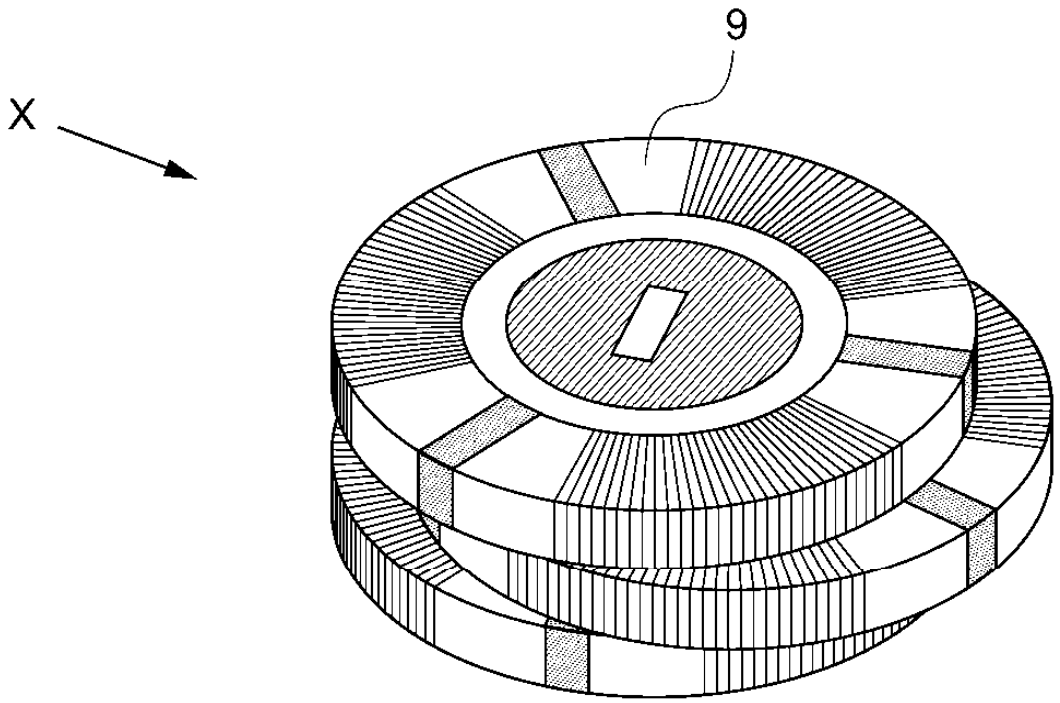

Fig. 2B

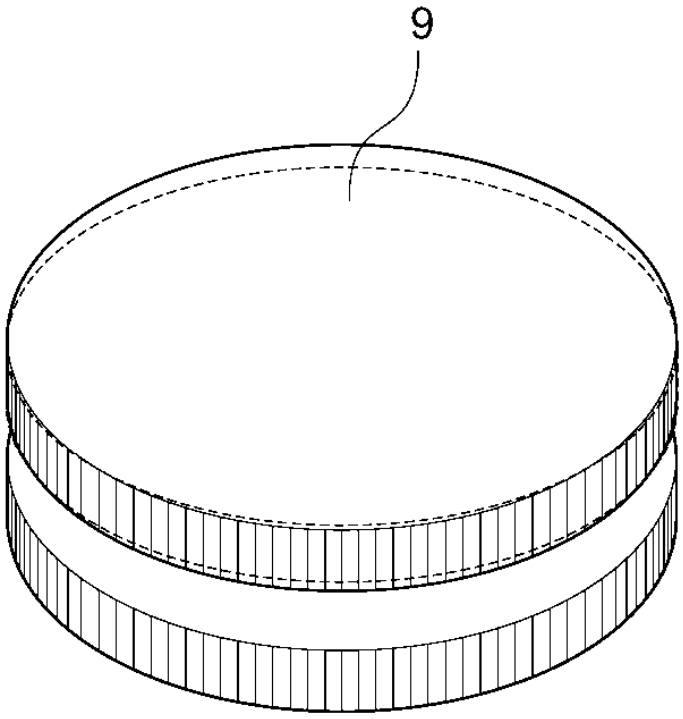

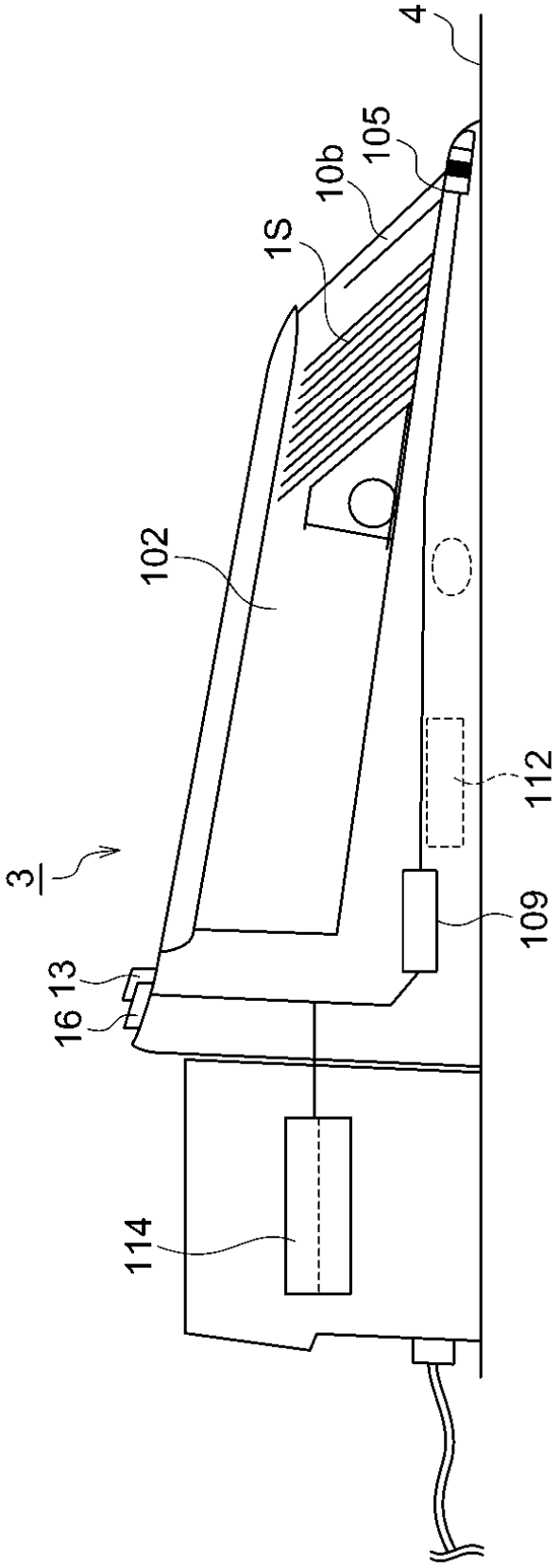

Fig. 3

Fig. 4

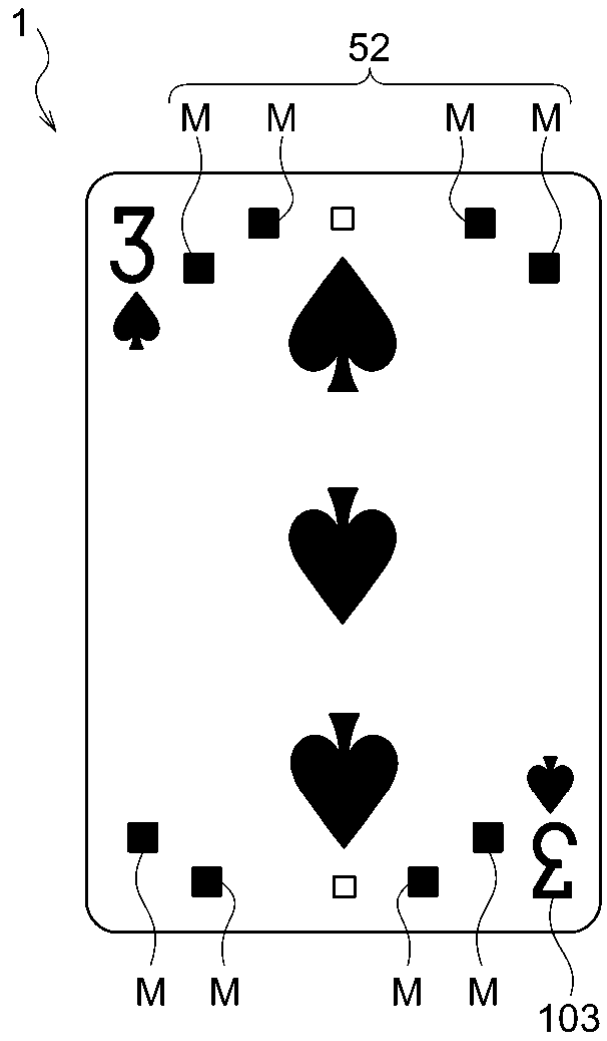

Fig. 5

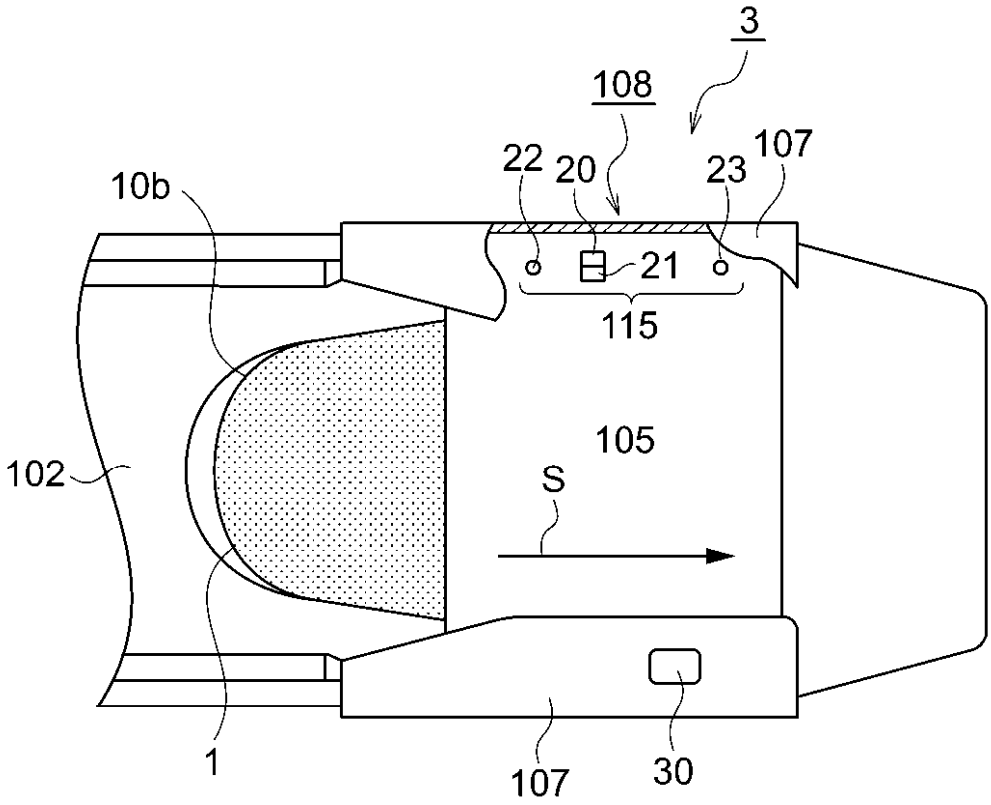

Fig. 6A

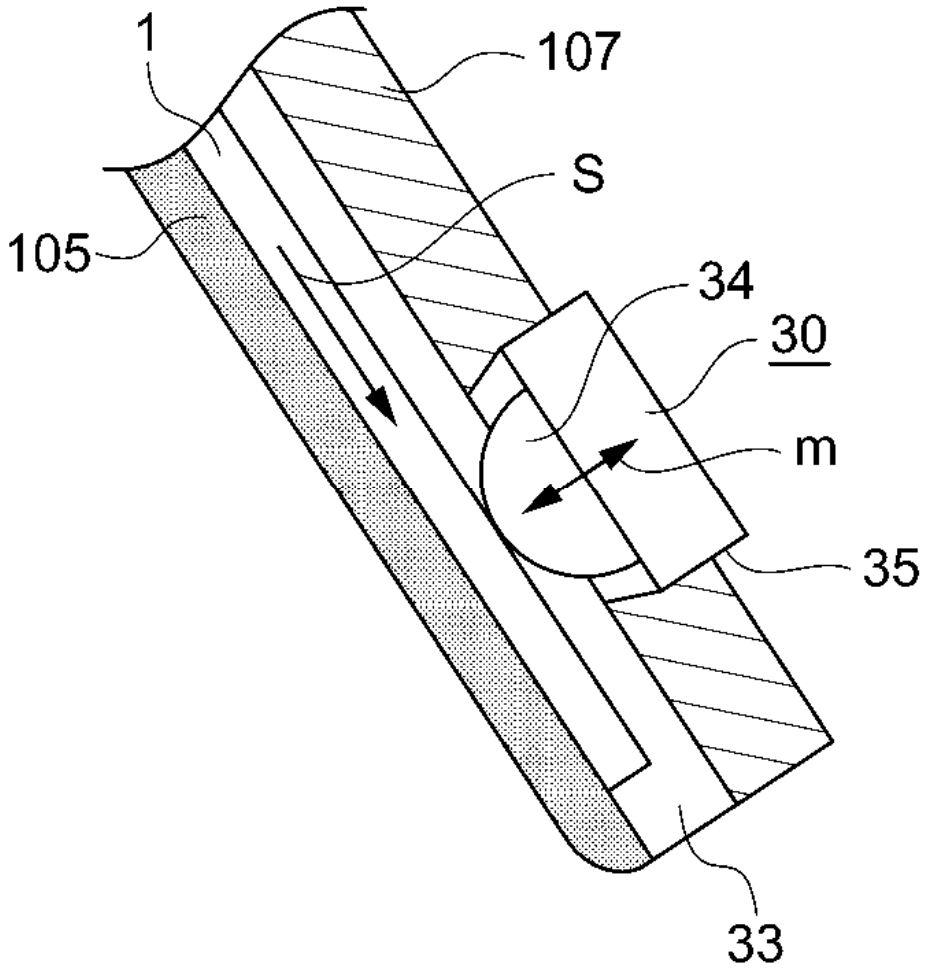

Fig. 6B

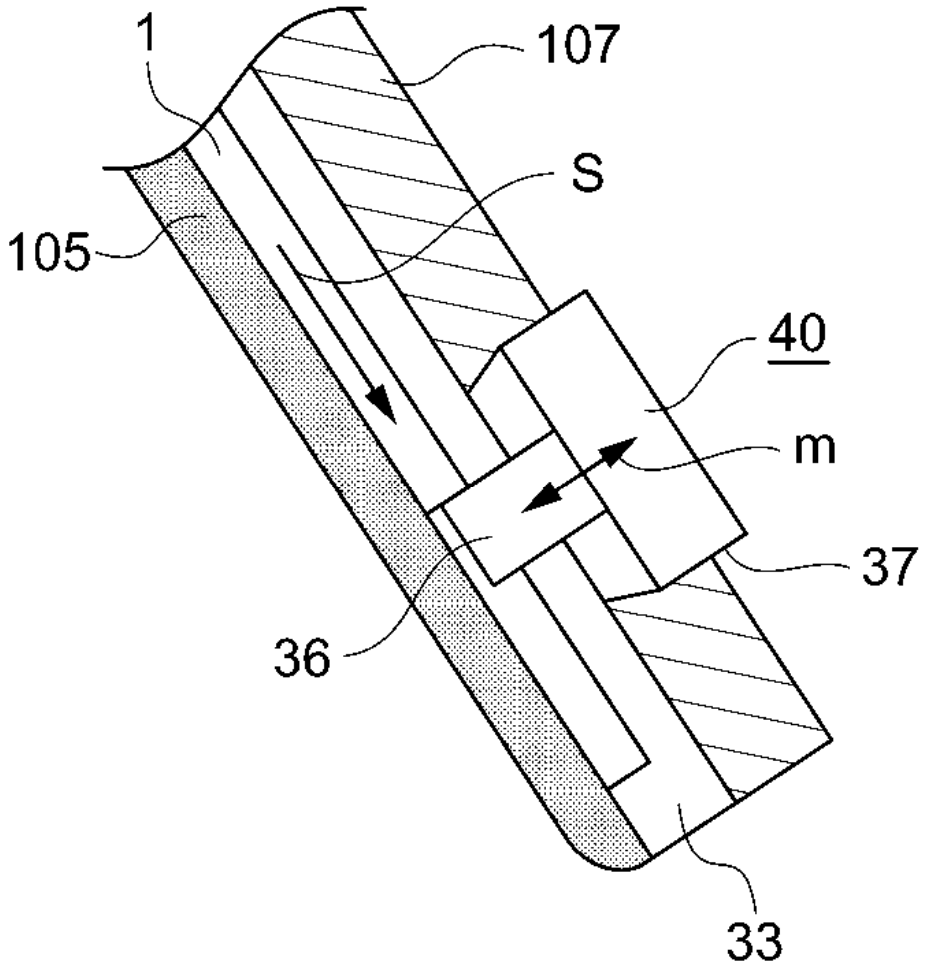

Fig. 7

ASSORTMENT	POSITIONAL RELATIONSHIP OF MARK	OUTPUT FROM SENSOR
1	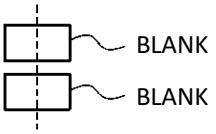	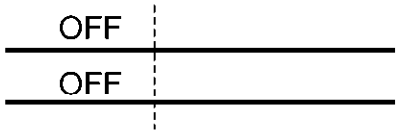
2	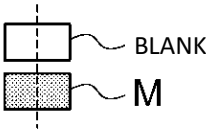	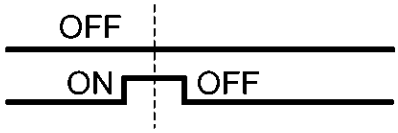
3	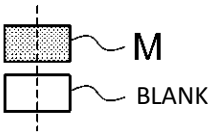	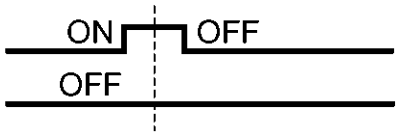
4	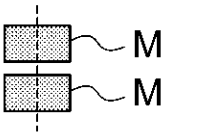	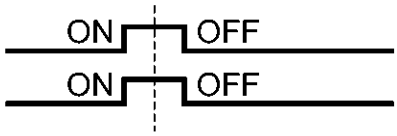

Fig. 8

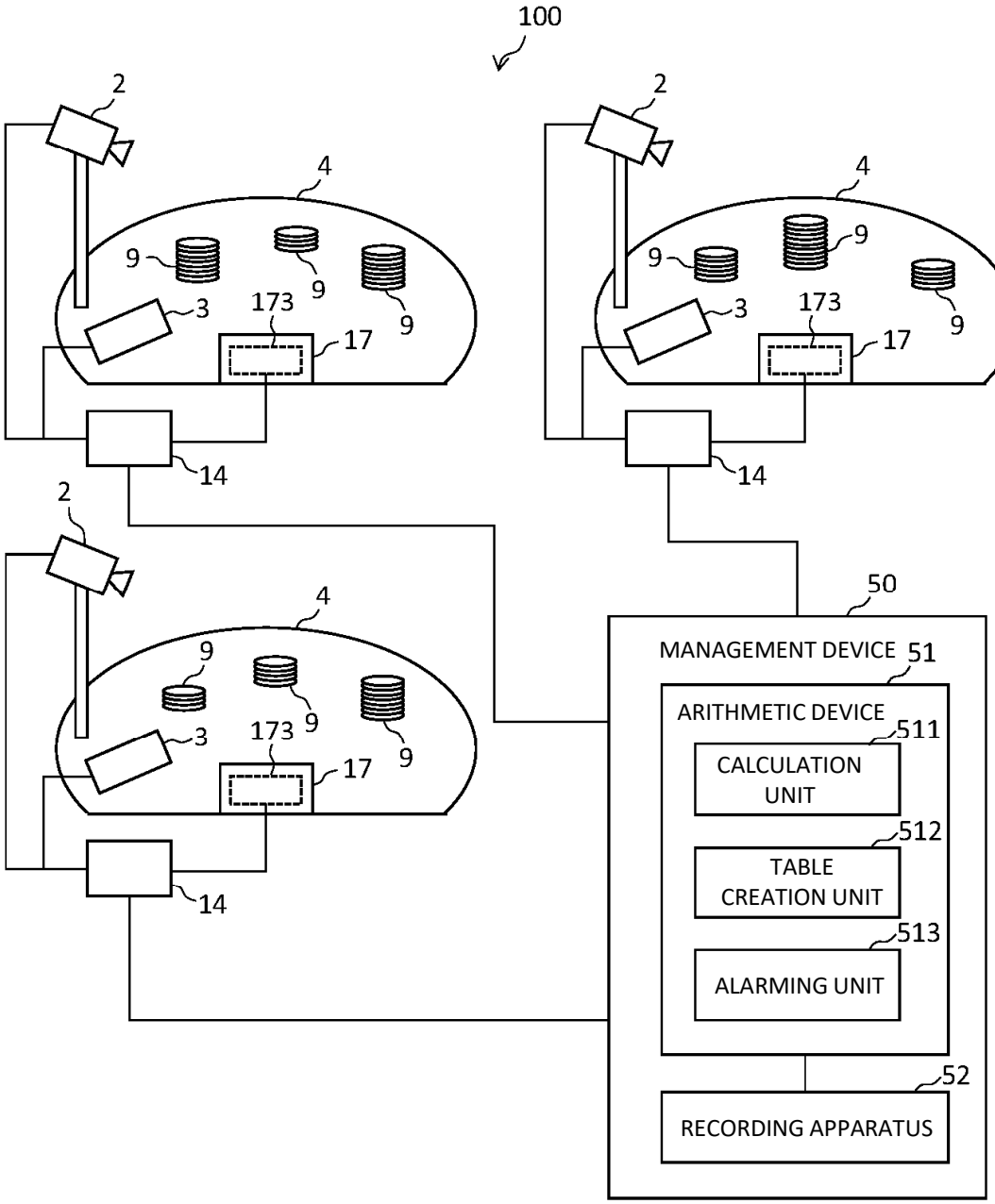
100
2
4
9
3
173
17
14
50
MANAGEMENT DEVICE
51
ARITHMETIC DEVICE
511
CALCULATION UNIT
512
TABLE CREATION UNIT
513
ALARMING UNIT
52
RECORDING APPARATUS

Fig. 9

Table No.	Chip Count								Total Amount
	$100,000	$50,000	$10,000	$5,000	$1,000	$500	$100	$25	
1	4	10	37	43	62	70	85	26	$1,591,150
2	5	11	35	20	89	67	82	23	$1,631,275
3	5	12	36	36	56	66	52	36	$1,735,100
4	2	7	49	45	78	65	61	31	$1,382,375
5	3	15	36	18	52	63	70	25	$1,591,125
6	4	10	44	41	80	60	80	38	$1,663,950
7	6	5	34	26	51	66	77	42	$1,412,750
.	.	.	.	.	.	.	.	.	.
.	.	.	.	.	.	.	.	.	.
.	.	.	.	.	.	.	.	.	.
73	36	24	50	20	12	27	31	18	$5,429,050
74	47	20	28	21	46	21	40	12	$6,145,800
75	4	5	30	20	66	68	80	27	$1,158,675
Total	311	750	2904	2454	5014	4896	5432	2368	$117,974,400

Fig. 10

Table 1									
Game No.	$100,000	$50,000	$10,000	$5,000	$1,000	$500	$100	$25	Total Amount
1	0	0	0	0	1	1	3	1	$1,825
2	0	0	1	0	0	2	4	0	$11,400
3	0	0	0	2	3	3	2	0	$14,700
.	.	.	.	.	.	.	.	.	.
.	.	.	.	.	.	.	.	.	.
.	.	.	.	.	.	.	.	.	.
79	0	0	2	0	2	0	2	1	$22,225
80	0	0	0	1	0	1	2	0	$5,700
Total	4	10	37	43	62	70	85	26	$1,591,150

Fig. 11

Table No.	Total Bet Amount	Gross Profit	Profit Ratio
1	$1,700,200	$42,505	2.5%
2	$1,460,400	$58,416	4.0%
3	$1,050,500	-$21,010	-2.0%
4	$1,650,700	$39,617	2.4%
5	$968,000	$32,912	3.4%
6	$1,104,200	$16,563	1.5%
7	$1,458,500	$90,427	6.2%
.	.	.	.
.	.	.	.
.	.	.	.
75	$1,755,425	$43,886	2.5%
Total	$100,633,929	$3,019,018	3.0%

Fig. 12

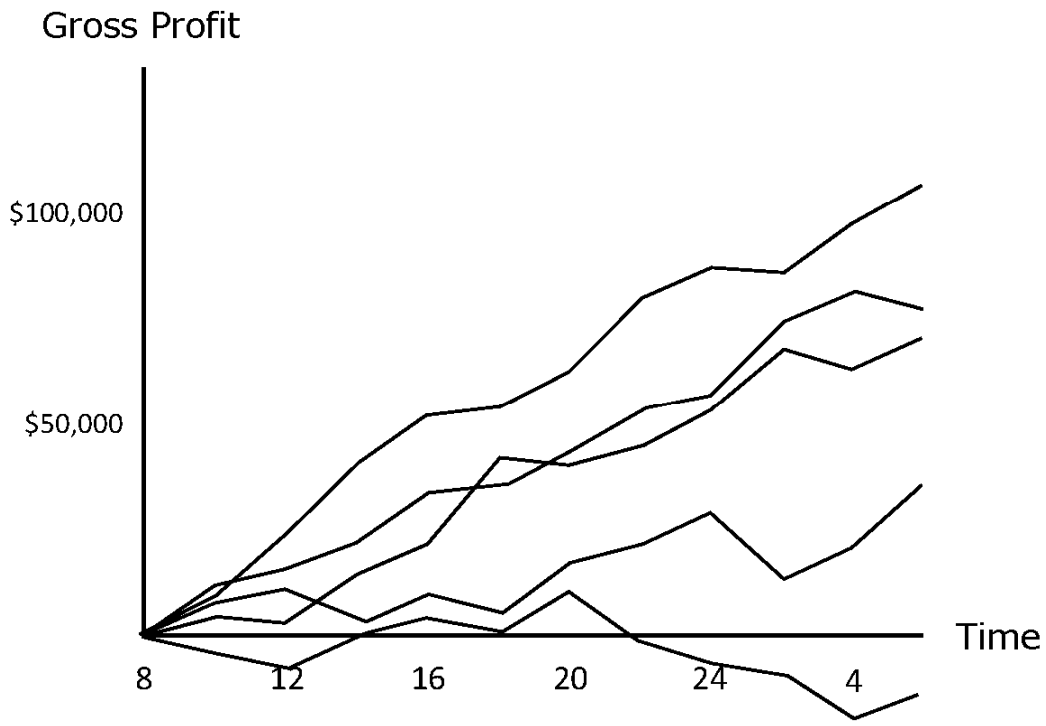

Fig. 13

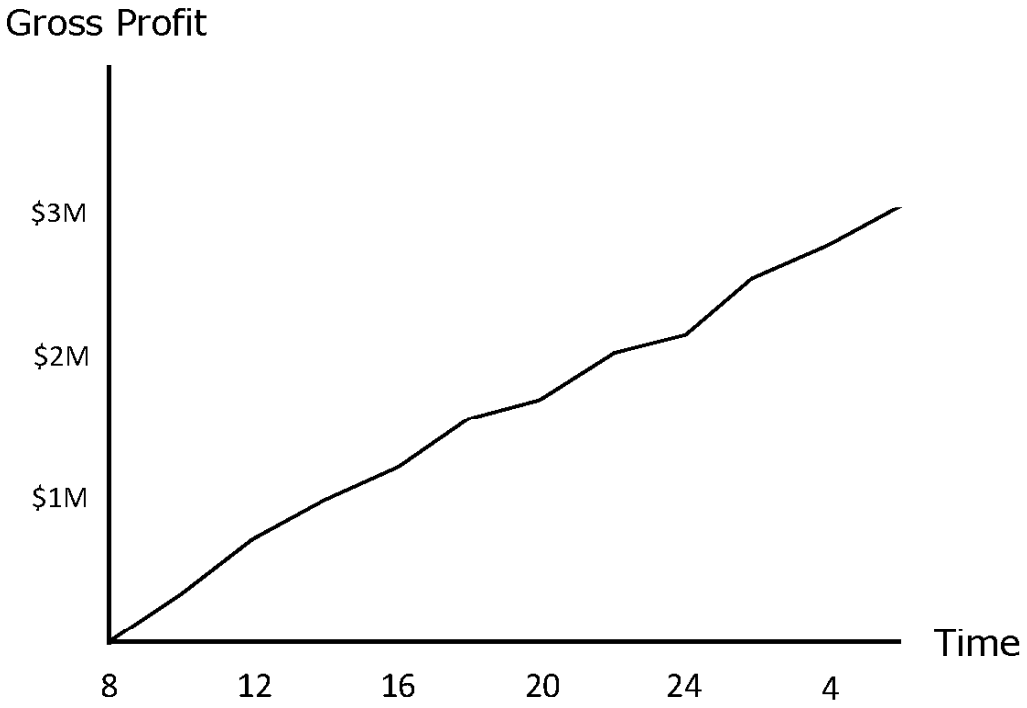

Fig. 14

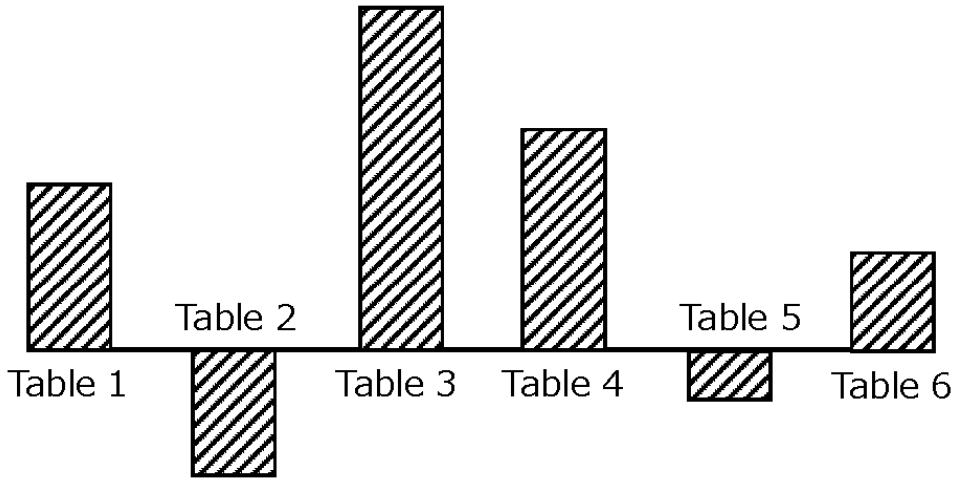

Fig. 15

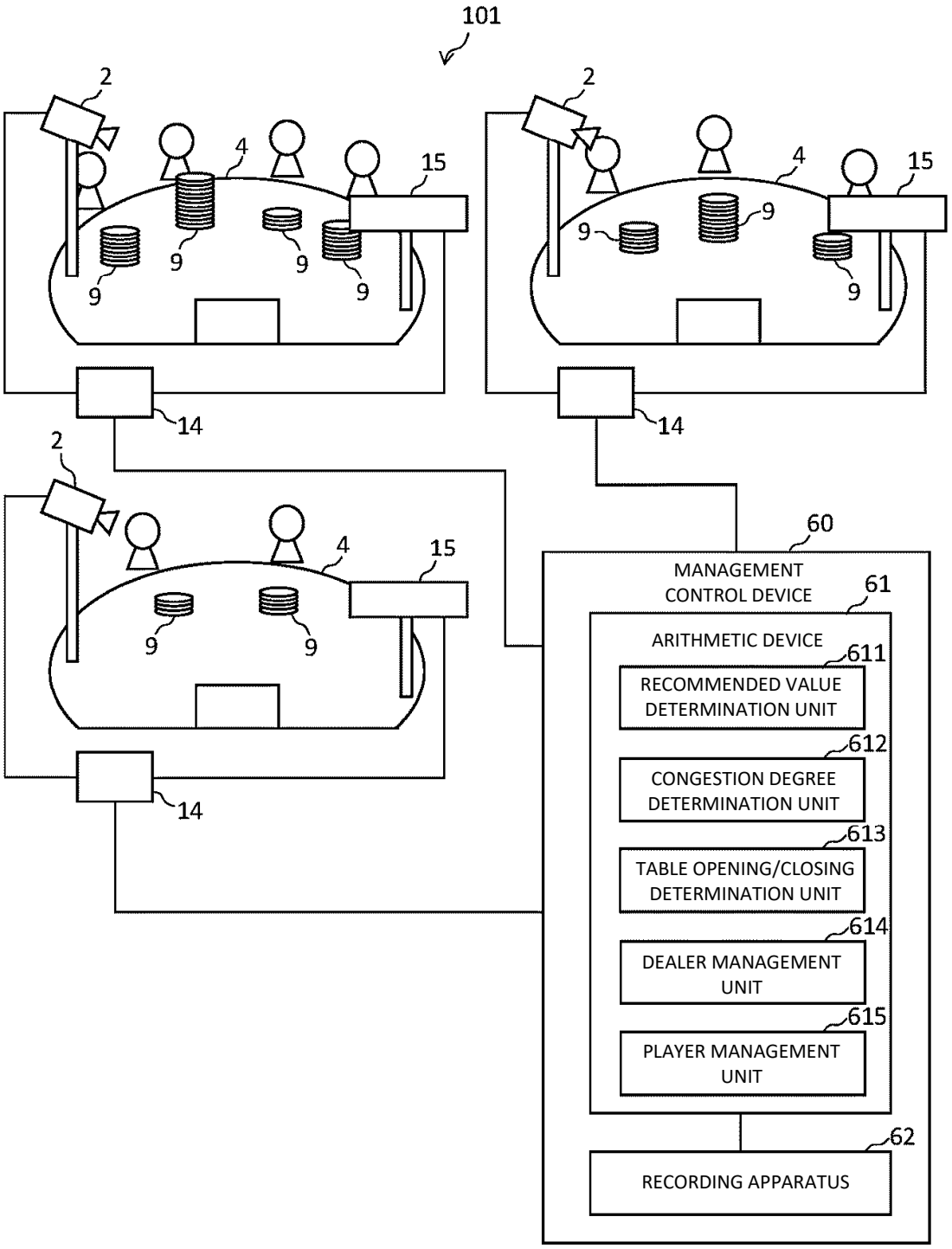
101
2
4
15
9
14
60
MANAGEMENT CONTROL DEVICE
61
ARITHMETIC DEVICE
611
RECOMMENDED VALUE DETERMINATION UNIT
612
CONGESTION DEGREE DETERMINATION UNIT
613
TABLE OPENING/CLOSING DETERMINATION UNIT
614
DEALER MANAGEMENT UNIT
615
PLAYER MANAGEMENT UNIT
62
RECORDING APPARATUS

Fig. 16A

	PLAYER 1	PLAYER 2	PLAYER 3	PLAYER 4
1	$1,000	$3,000	$2,000	$1,000
2	$1,200	$3,000	$1,500	$1,500
3	$2,000	$2,000	$1,800	$1,000
4	$1,000	$3,500	$2,300	$1,300
5	$1,500	$2,300	$1,800	$1,000
	↓	↓	↓	↓
LOWEST AMOUNT	$1,000	$2,000	$1,500	$1,000
	LOW AMOUNT	HIGH AMOUNT	HIGH AMOUNT	LOW AMOUNT

Fig. 16B

	PLAYER 1	PLAYER 2	PLAYER 3	PLAYER 4
1	$1,000	$1,500	$2,000	$1,300
2	$1,200	$2,000	$1,000	$1,500
3	$2,000	$2,000	$1,500	$1,100
4	$1,000	$3,000	$1,300	$1,300
5	$1,500	$1,500	$1,800	$1,200
	↓	↓	↓	↓
LOWEST AMOUNT	$1,000	$1,500	$1,000	$1,100
	LOW AMOUNT	HIGH AMOUNT	LOW AMOUNT	LOW AMOUNT

Fig. 17A

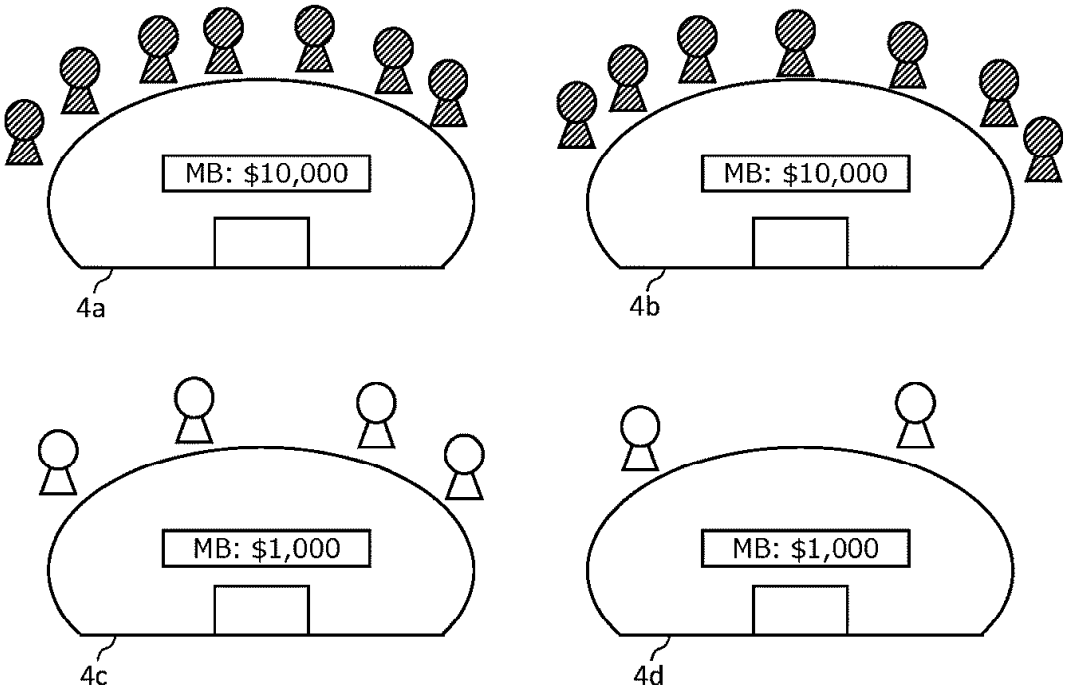

Fig. 17B

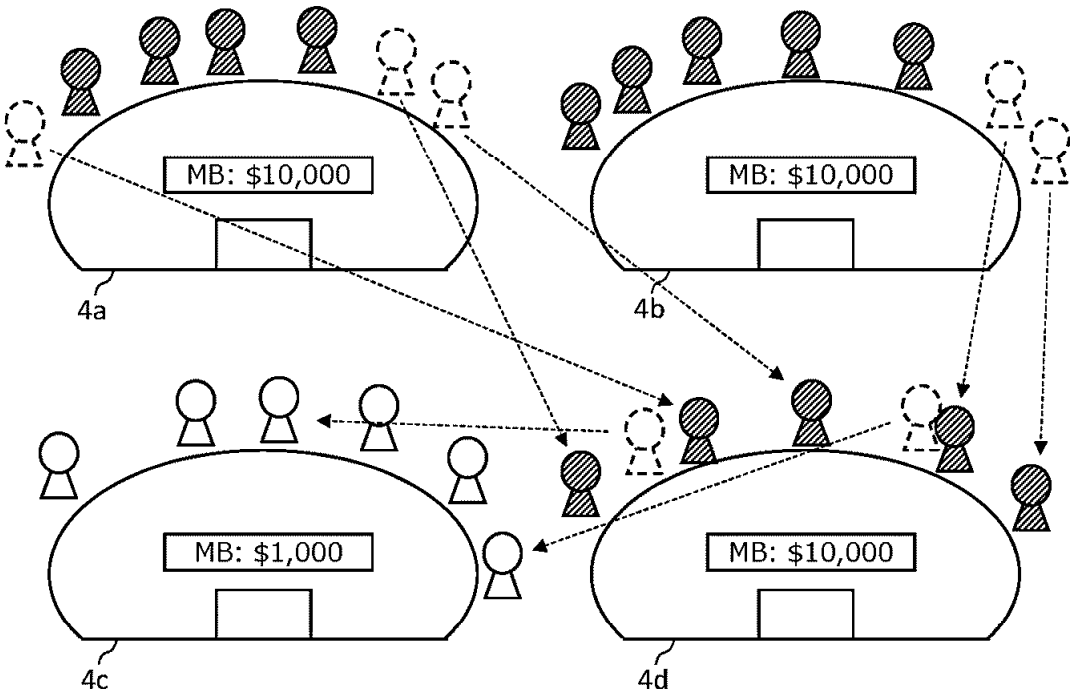

Fig. 18A

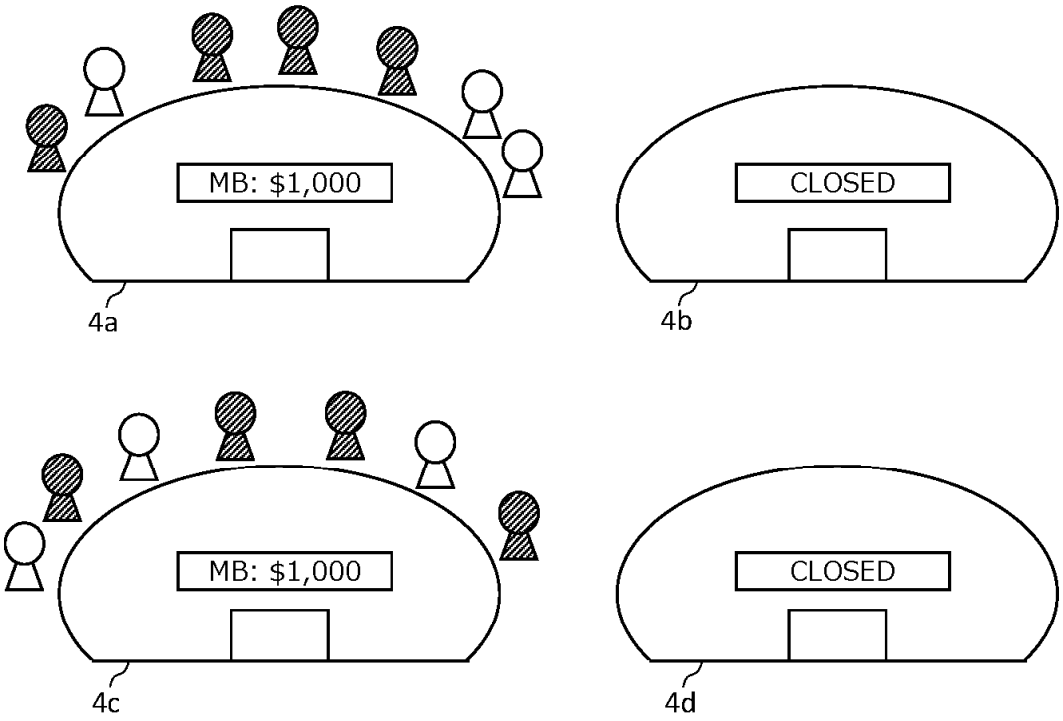

Fig. 18B

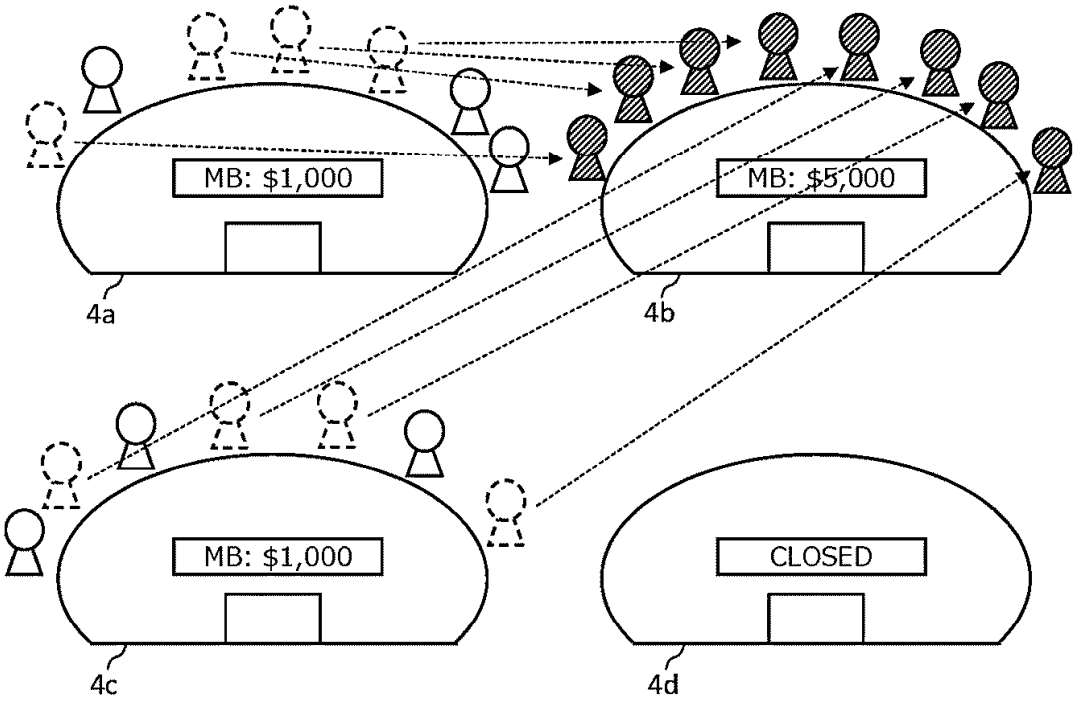

Fig. 18C

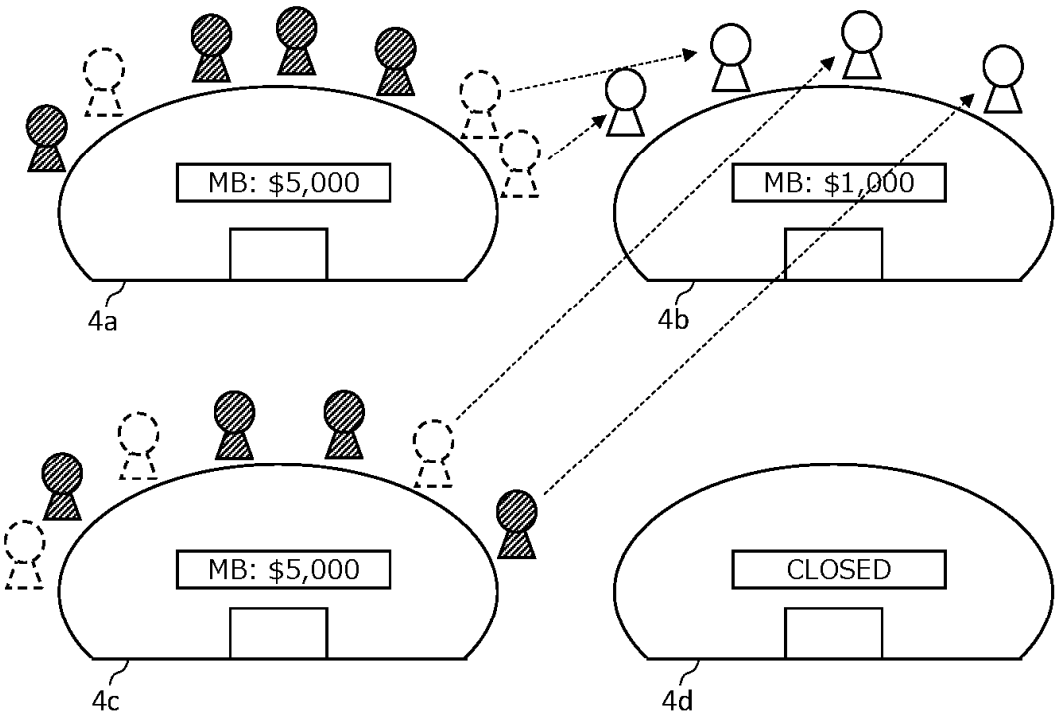

Fig. 19

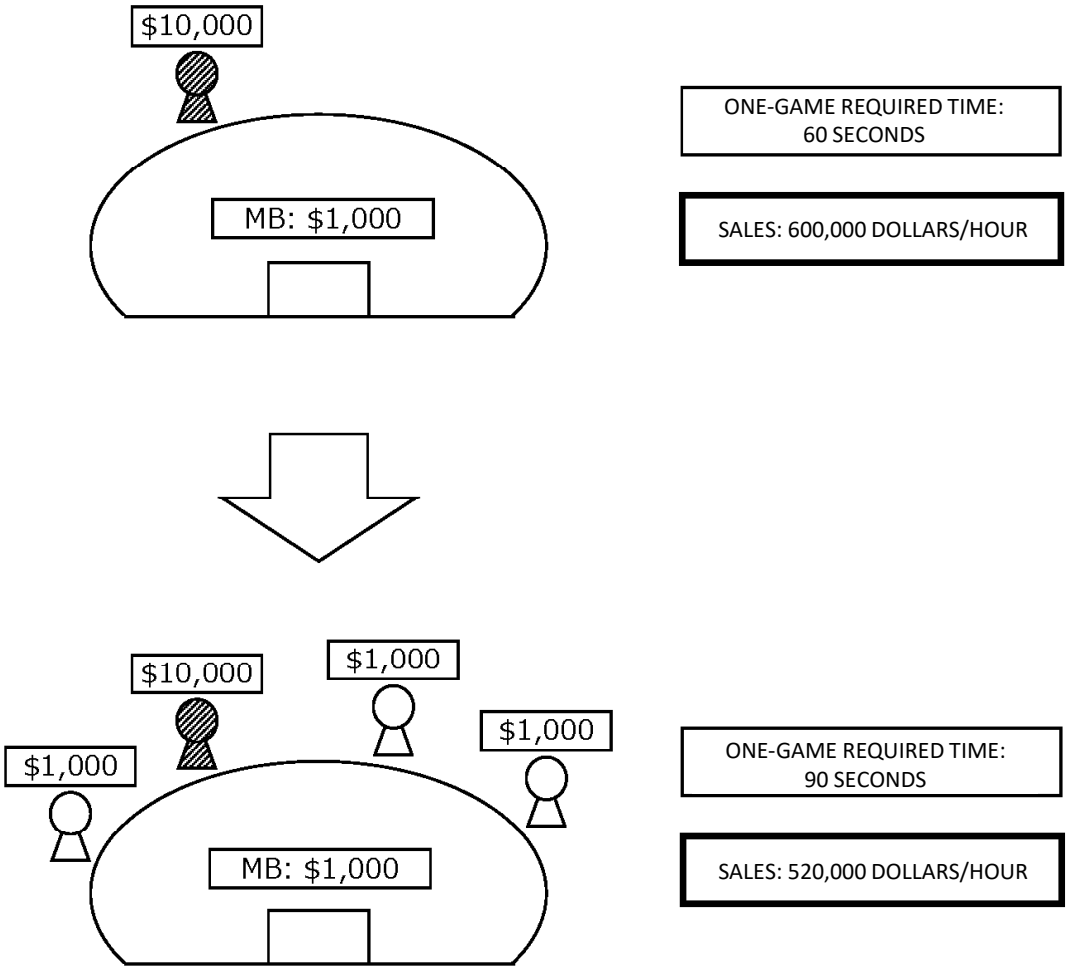
$10,000
MB: $1,000
ONE-GAME REQUIRED TIME:
60 SECONDS
SALES: 600,000 DOLLARS/HOUR
$10,000
$1,000
$1,000
$1,000
MB: $1,000
ONE-GAME REQUIRED TIME:
90 SECONDS
SALES: 520,000 DOLLARS/HOUR

Fig. 20A

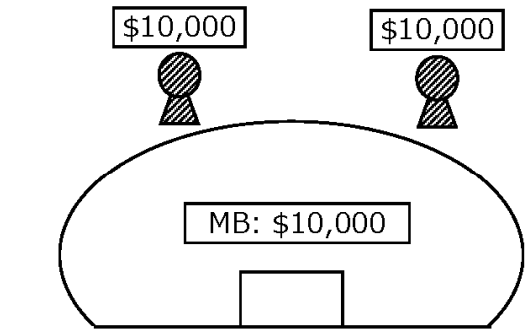

ONE-GAME REQUIRED TIME:
70 SECONDS

SALES: 1,030,000 DOLLARS/HOUR

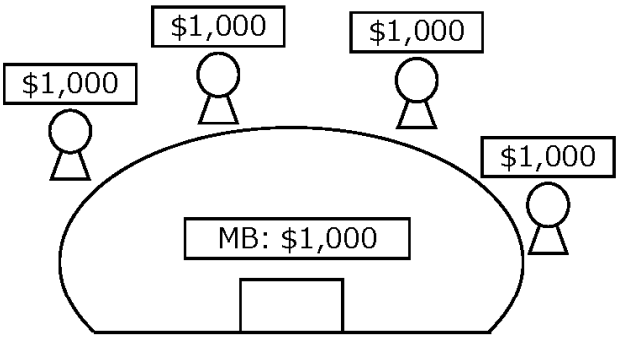

ONE-GAME REQUIRED TIME:
90 SECONDS

SALES: 160,000 DOLLARS/HOUR

TOTAL SALES: 1,190,000
DOLLARS/HOUR

Fig. 20B

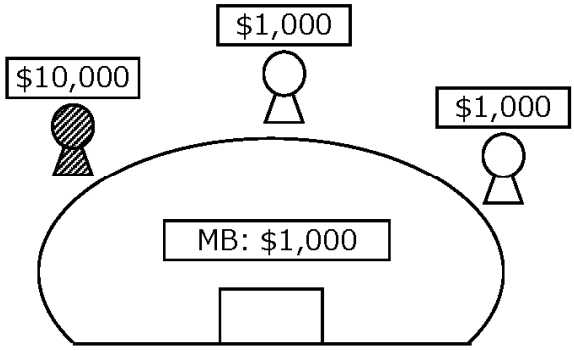

ONE-GAME REQUIRED TIME:
80 SECONDS

SALES: 540,000 DOLLARS/HOUR

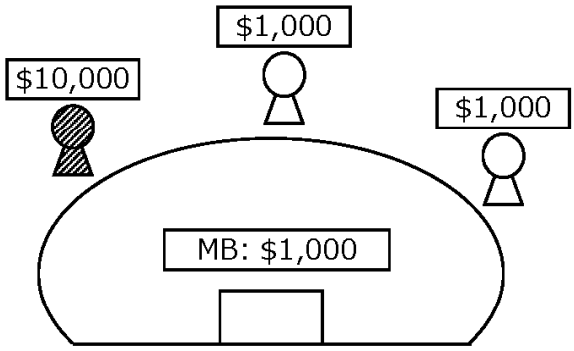

ONE-GAME REQUIRED TIME:
80 SECONDS

SALES: 540,000 DOLLARS/HOUR

TOTAL SALES: 1,080,000
DOLLARS/HOUR