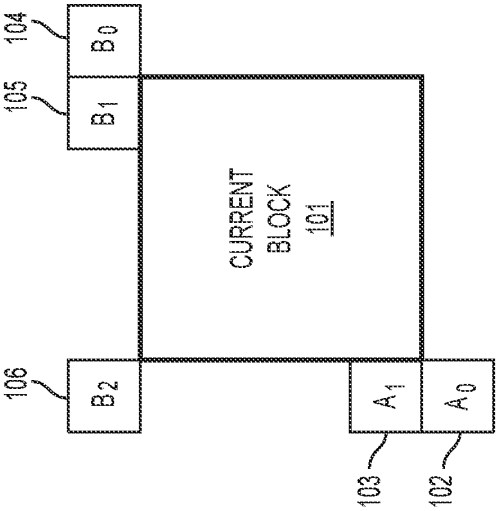

FIG. 1
(Related Art)

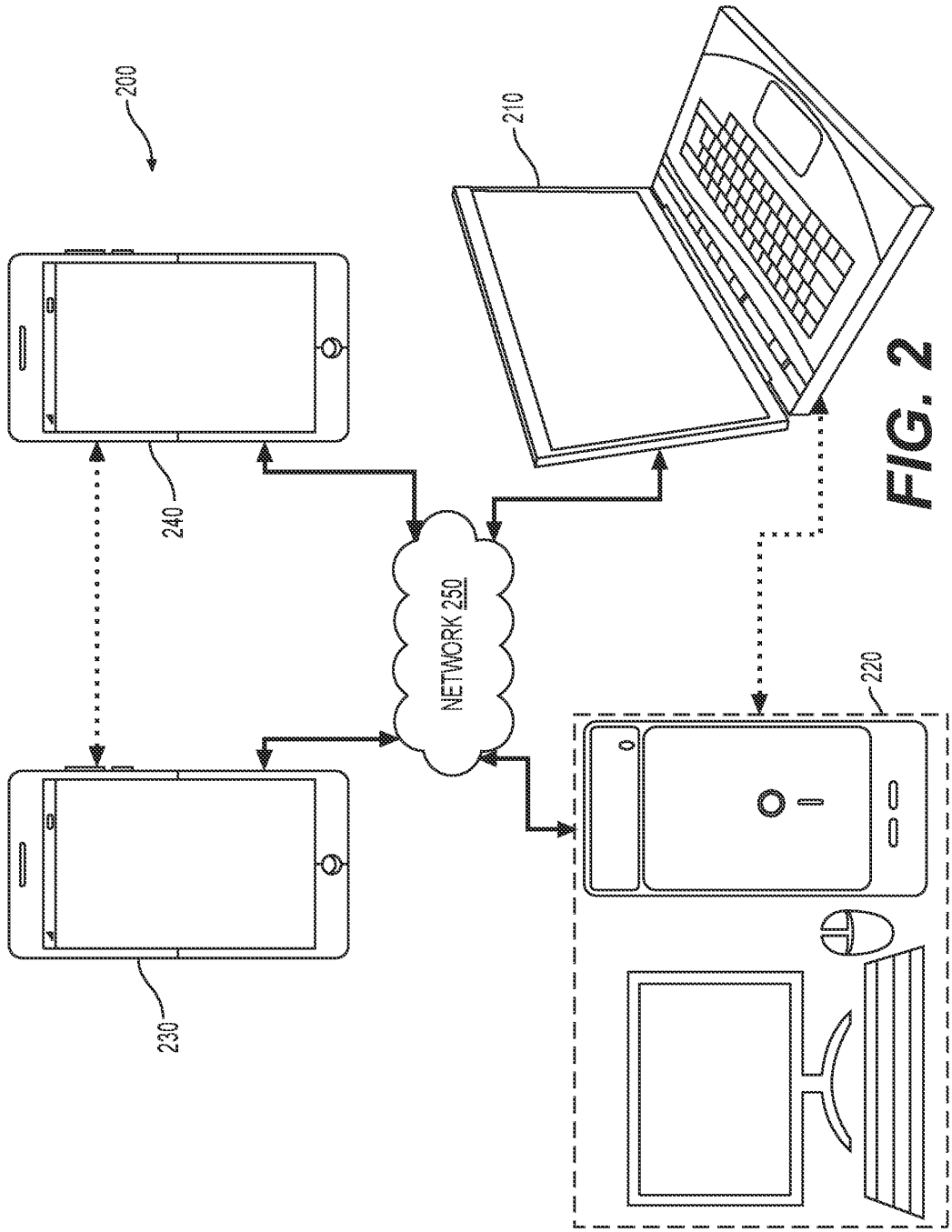

FIG. 2

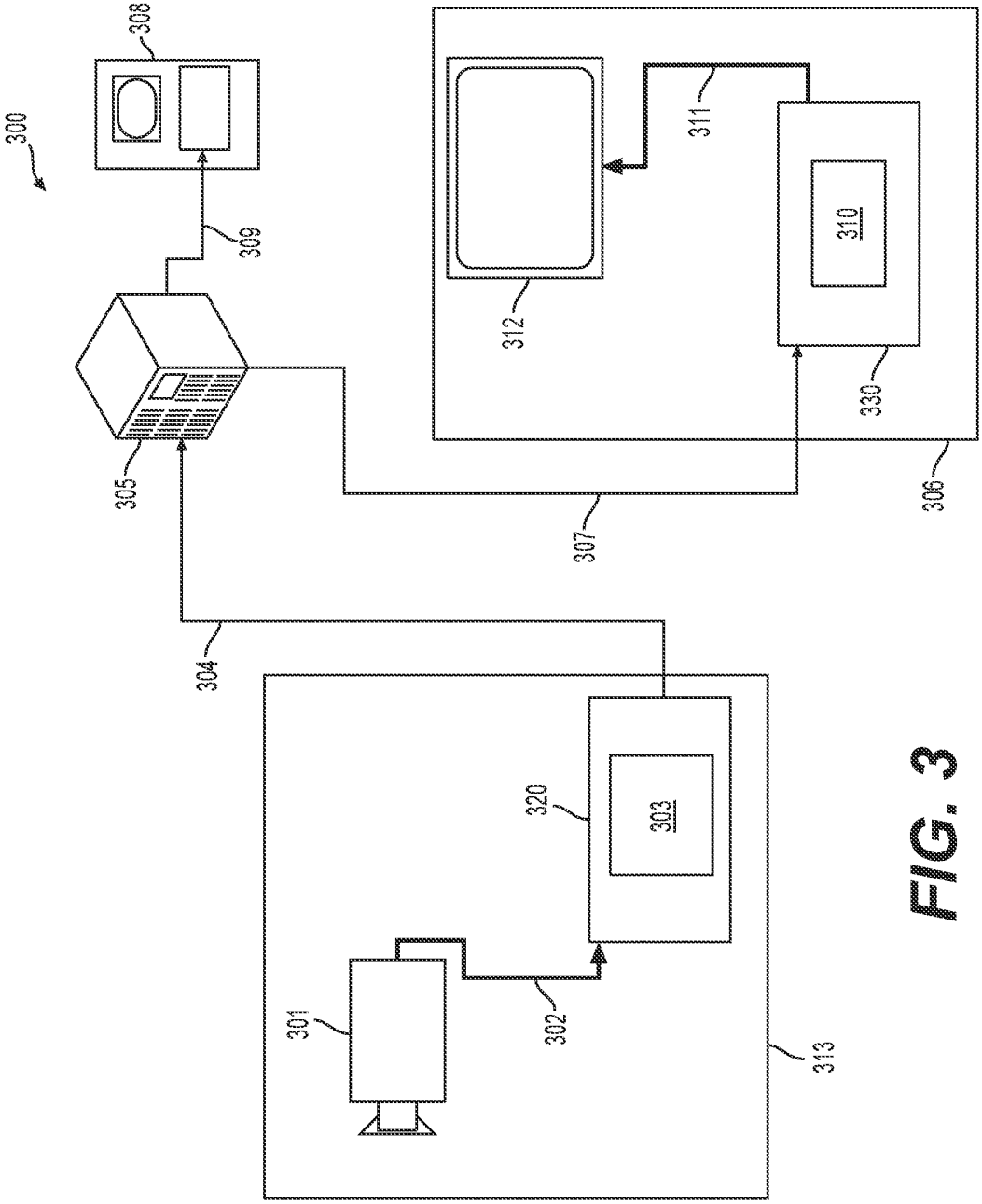

FIG. 3

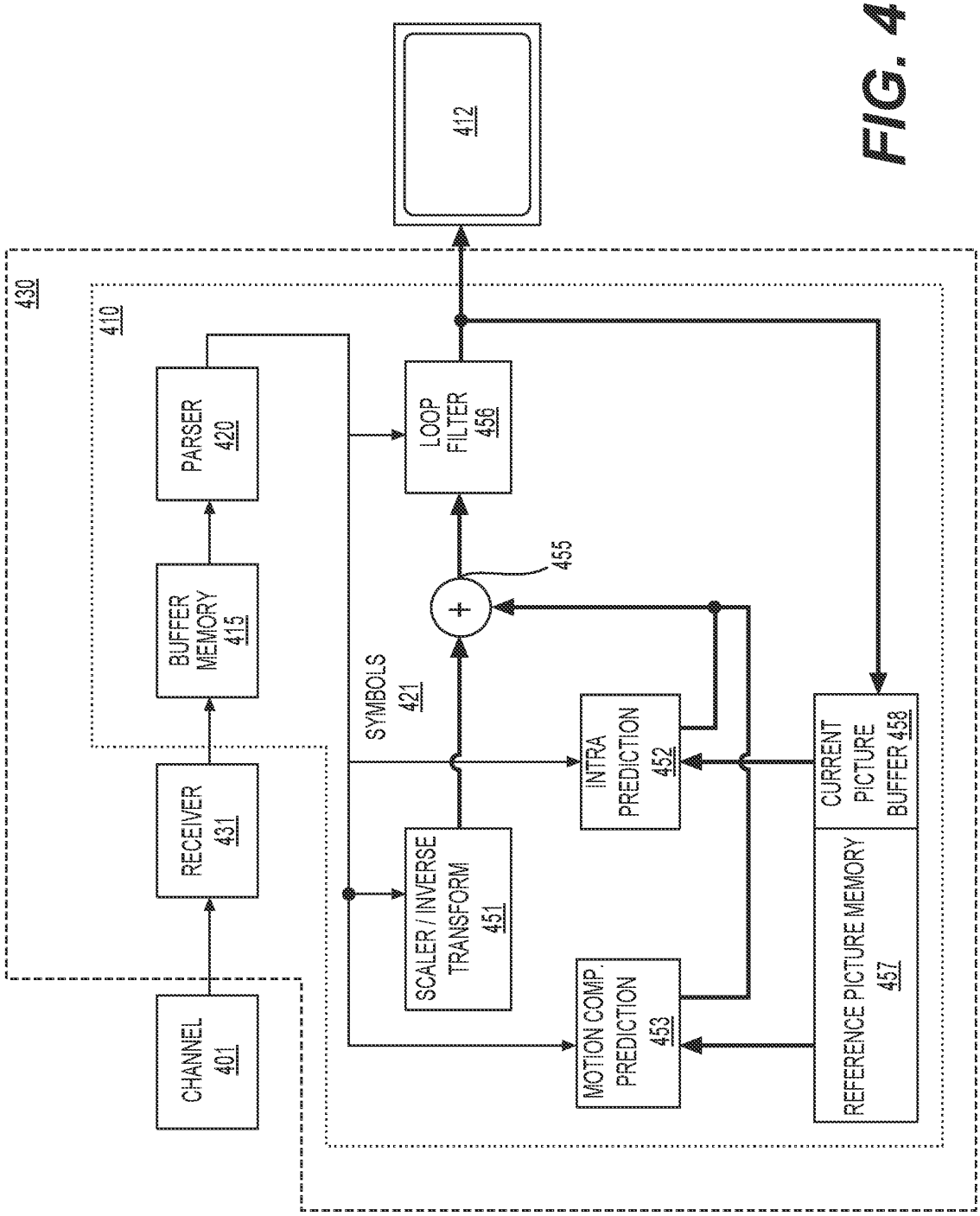
430
410
412
CHANNEL 401
RECEIVER 431
BUFFER MEMORY 415
PARSER 420
SYMBOLS 421
SCALER / INVERSE TRANSFORM 451
MOTION COMP PREDICTION 453
INTRA PREDICTION 452
+
455
LOOP FILTER 456
CURRENT PICTURE BUFFER 458
REFERENCE PICTURE MEMORY 457

FIG. 4

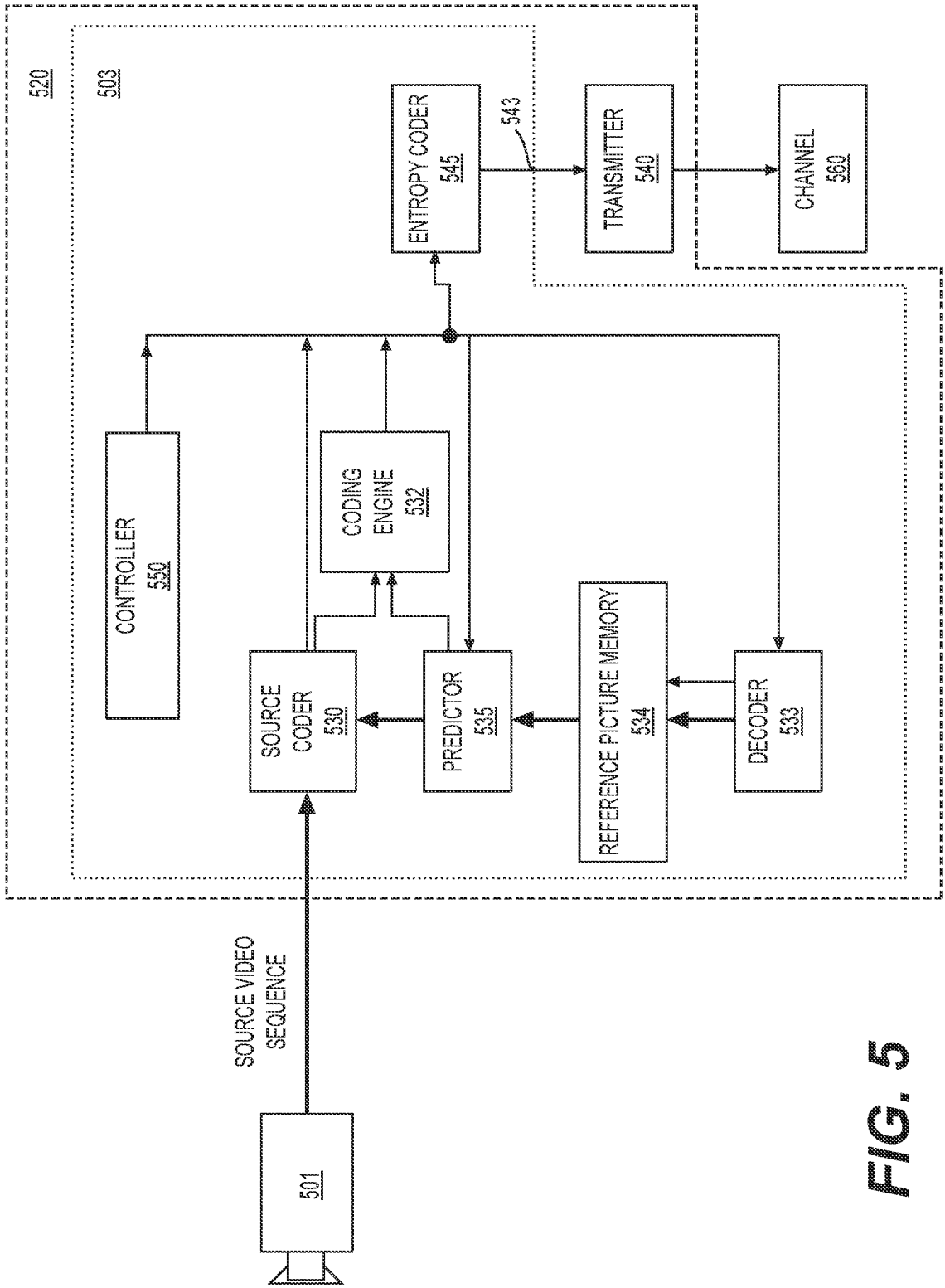
520
503
CONTROLLER
550
CODING
ENGINE
532
ENTROPY CODER
545
543
TRANSMITTER
540
CHANNEL
560
SOURCE
CODER
530
PREDICTOR
535
REFERENCE PICTURE MEMORY
534
DECODER
533
SOURCE VIDEO
SEQUENCE
501

FIG. 5

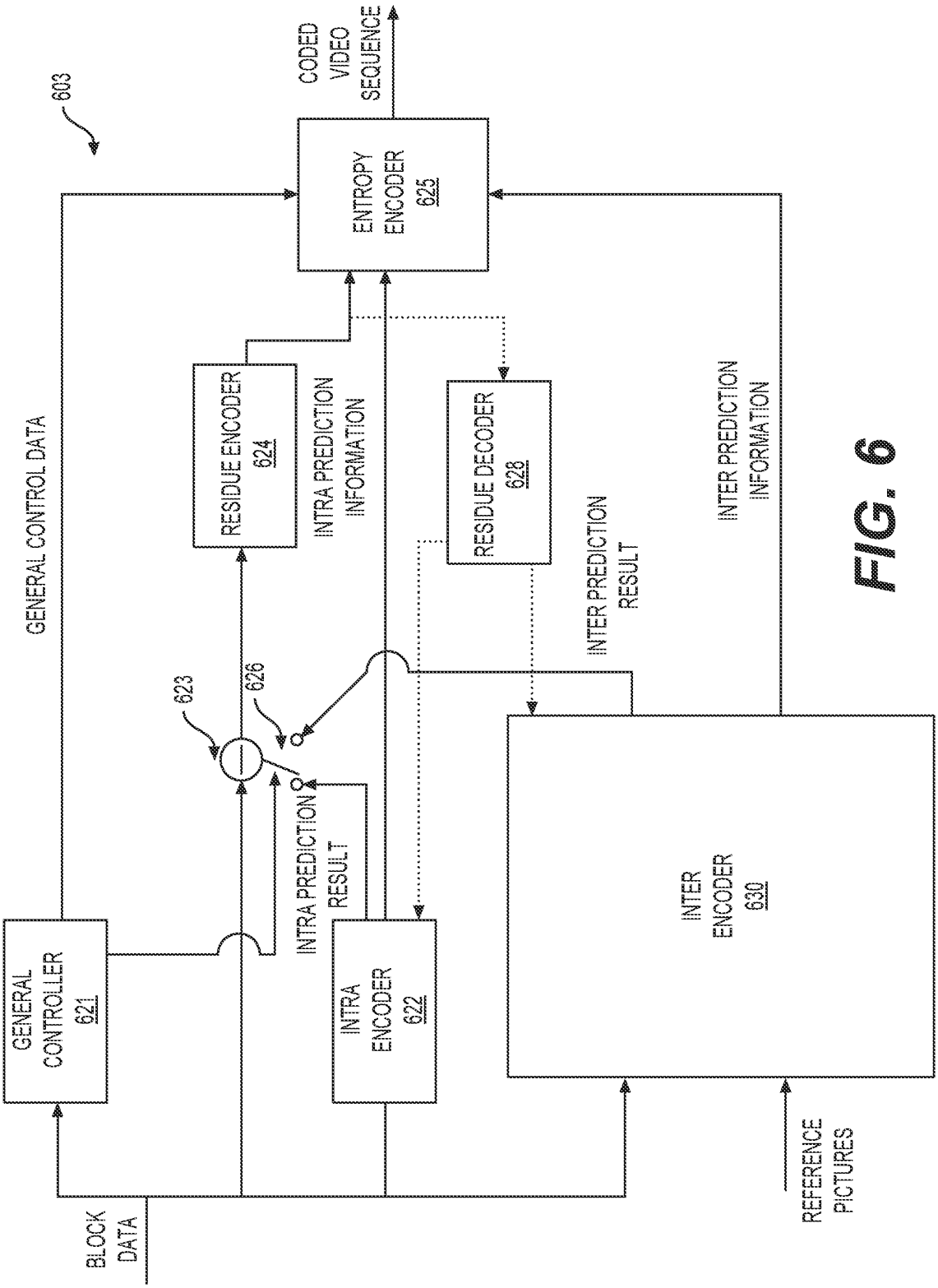
603
GENERAL CONTROL DATA
CODED VIDEO SEQUENCE
ENTROPY ENCODER 625
RESIDUE ENCODER 624
INTRA PREDICTION INFORMATION
RESIDUE DECODER 628
INTER PREDICTION INFORMATION
INTER PREDICTION RESULT
623
626
INTRA PREDICTION RESULT
GENERAL CONTROLLER 621
INTRA ENCODER 622
INTER ENCODER 630
BLOCK DATA
REFERENCE PICTURES

FIG. 6

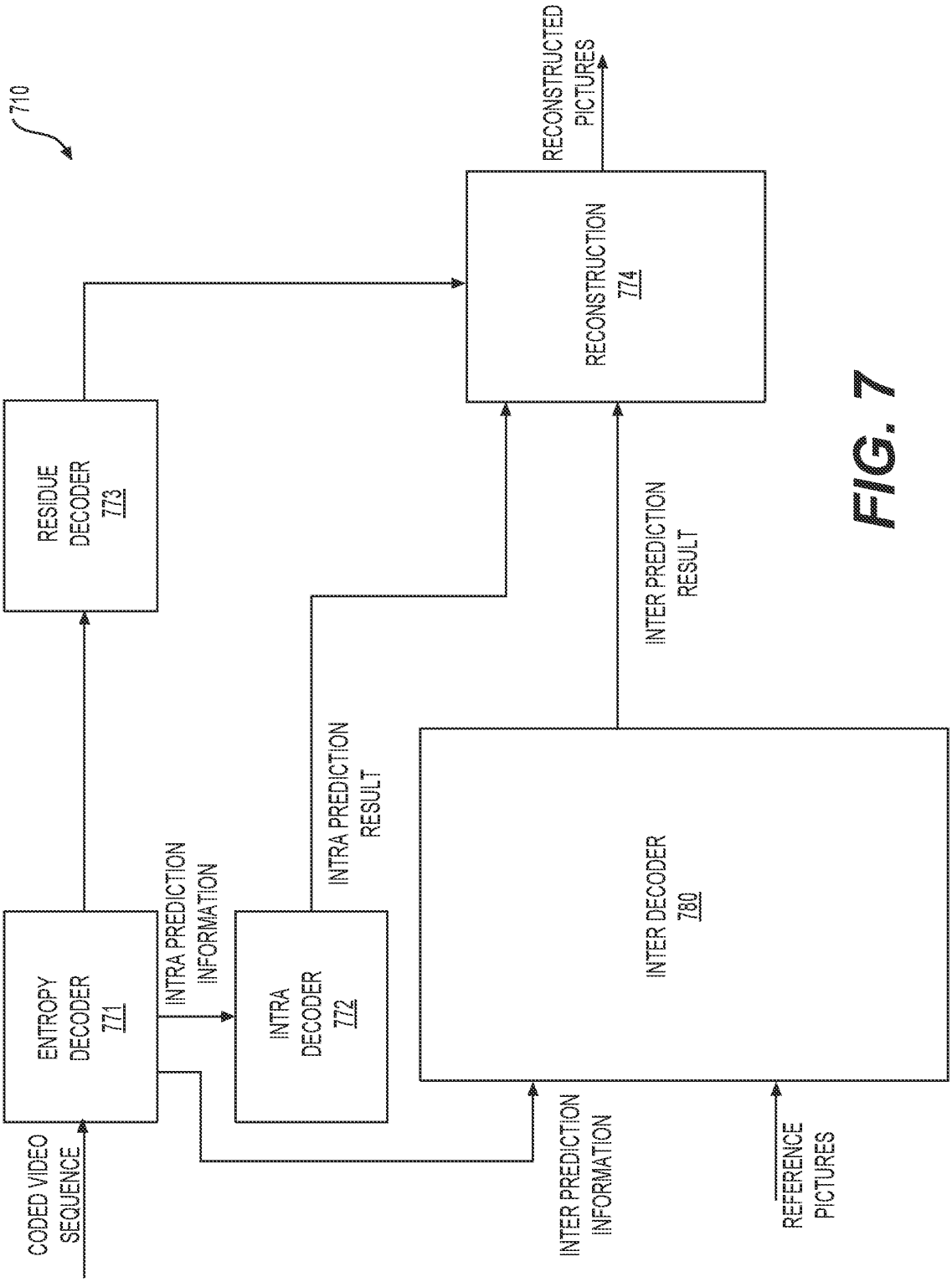
710
CODED VIDEO SEQUENCE
ENTROPY DECODER 771
INTRA PREDICTION INFORMATION
INTRA DECODER 772
INTRA PREDICTION RESULT
RESIDUE DECODER 773
RECONSTRUCTION 774
RECONSTRUCTED PICTURES
INTER PREDICTION INFORMATION
INTER DECODER 780
REFERENCE PICTURES
INTER PREDICTION RESULT

FIG. 7

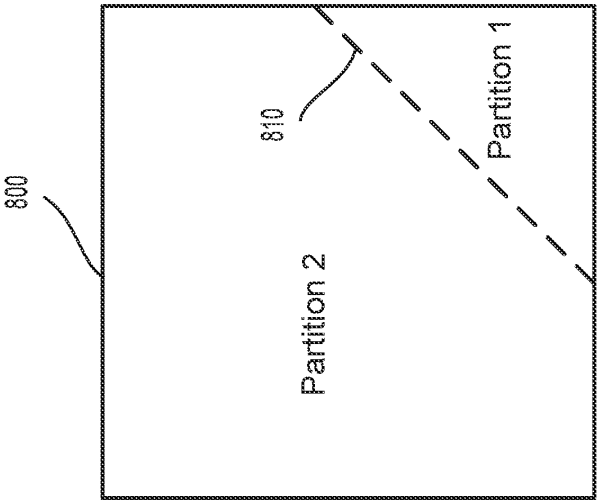

FIG. 8

pic_parameter_set_rbsp( ) {	Descriptor
...	
constant_slice_header_params_enabled_flag	u(1)
if(constant_slice_header_params_enabled_flag) {	
...	
pps_six_minus_max_num_merge_cand_plus1	ue(v)
...	
}	
...	
}	

FIG. 9

picture_header_rbsp( ) {	Descriptor
…	
if(!pps_six_minus_max_num_merge_cand_plus1)	
pic_six_minus_max_num_merge_cand	ue(v)
…	
}	

FIG. 10

seq_parameter_set_rbsp( ) {	**Descriptor**
…	
sps_geo_enabled_flag	u(1)
…	
}	

FIG. 11

pic_parameter_set_rbsp( ) {	Descriptor
…	
constant_slice_header_params_enabled_flag	u(1)
if(constant_slice_header_params_enabled_flag) {	
…	
pps_max_num_merge_cand_minus_max_num_geo_cand_plus1	ue(v)
}	
…	
}	

FIG. 12

picture_header_rbsp( ) {	Descriptor
…	
if(sps_triangle_enabled_flag && MaxNumMergeCand >= 2 && !pps_max_num_merge_cand_minus_max_num_geo_cand_plus1)	
pic_max_num_merge_cand_minus_max_num_geo_cand	ue(v)
…	
}	

FIG. 13

picture_header_rbsp( ) {	Descriptor
…	
if(sps_affine_enabled_flag)	
pic_five_minus_max_num_subblock_merge_cand	ue(v)
…	
}	

FIG. 14

picture_header_rbsp( ) {	Descriptor
…	
if (sps_ibc_enabled_flag)	
pic_six_minus_max_num_ibc_merge_cand	ue(v)
…	
}	

FIG. 15

seq_parameter_set_rbsp( ) {	Descriptor
six_minus_max_num_merge_cand	ue(v)
...	
five_minus_max_num_subblock_merge_cand	ue(v)
...	
six_minus_max_num_ibc_merge_cand	ue(v)
....	
max_num_merge_cand_minus_max_num_geo_cand	ue(v)
...	
}	

FIG. 16

seq_parameter_set_rbsp( ) {	Descriptor
six_minus_max_num_merge_cand	ue(v)
...	
sps_affine_enabled_flag	u(1)
if(sps_affine_enabled_flag) {	
five_minus_max_num_subblock_merge_cand	ue(v)
...	
}	
...	
sps_ibc_enabled_flag	u(1)
if (sps_ibc_enabled_flag)	
six_minus_max_num_ibc_merge_cand	ue(v)
....	
sps_geo_enabled_flag	u(1)
if (sps_geo_enabled_flag && MaxNumMergeCand >= 3)	
max_num_merge_cand_minus_max_num_geo_cand	ue(v)
}	
...	
}	

1710

1711

1712

FIG. 17

seq_parameter_set_rbsp( ) {	Descriptor
six_minus_max_num_merge_cand	ue(v)
...	
sps_ibc_enabled_flag	u(1)
if (sps_ibc_enabled_flag)	
six_minus_max_num_ibc_merge_cand	ue(v)
....	
sps_geo_enabled_flag	u(1)
if (sps_geo_enabled_flag && MaxNumMergeCand >= 3)	
max_num_merge_cand_minus_max_num_geo_cand	ue(v)
}	
...	
}	

FIG. 18A

1810

picture_header_rbsp( ) {	Descriptor
...	
if(sps_affine_enabled_flag) {	
five_minus_max_num_subblock_merge_cand	ue(v)
...	
}	

FIG. 18B

FIG. 19A

seq_parameter_set_rbsp( ) {	Descriptor
six_minus_max_num_merge_cand	ue(v)
...	
sps_affine_enabled_flag	u(1)
if(sps_affine_enabled_flag) {	
five_minus_max_num_subblock_merge_cand	ue(v)
...	
}	
...	
sps_ibc_enabled_flag	u(1)
if (sps_ibc_enabled_flag)	
six_minus_max_num_ibc_merge_cand	ue(v)
....	
sps_geo_enabled_flag	u(1)
if (sps_geo_enabled_flag && MaxNumMergeCand >= 3)	
max_num_merge_cand_minus_max_num_geo_cand	ue(v)
}	
...	
}	

FIG. 19B

picture_header_rbsp( ) {	Descriptor
...	
pic_temporal_mvp_enabled_flag	u(1)
...	
}	

2010

seq_parameter_set_rbsp( ) {	Descriptor
six_minus_max_num_merge_cand	ue(v)
...	
sps_affine_enabled_flag	u(1)
if(sps_affine_enabled_flag) {	
five_minus_max_num_subblock_merge_cand	ue(v)
...	
}	
...	
sps_ibc_enabled_flag	u(1)
if (sps_ibc_enabled_flag)	
six_minus_max_num_ibc_merge_cand_present_flag	u(1)
if (six_minus_max_num_ibc_merge_cand_present_flag)	
six_minus_max_num_ibc_merge_cand	ue(v)
....	
sps_geo_enabled_flag	u(1)
if (sps_geo_enabled_flag && MaxNumMergeCand >= 3)	
max_num_merge_cand_minus_max_num_geo_cand	ue(v)
}	
...	
}	

FIG. 20

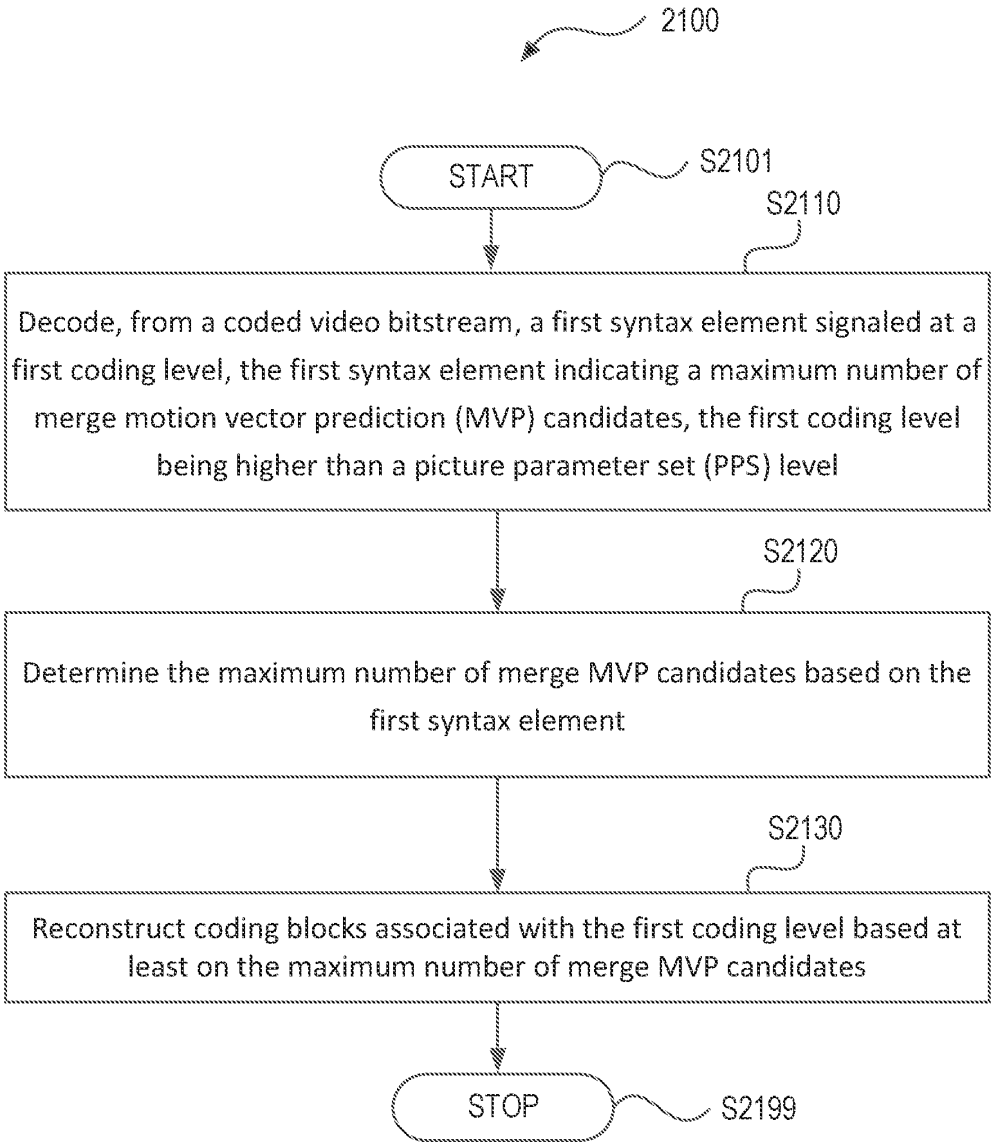
2100
START
S2101
S2110
Decode, from a coded video bitstream, a first syntax element signaled at a first coding level, the first syntax element indicating a maximum number of merge motion vector prediction (MVP) candidates, the first coding level being higher than a picture parameter set (PPS) level
S2120
Determine the maximum number of merge MVP candidates based on the first syntax element
S2130
Reconstruct coding blocks associated with the first coding level based at least on the maximum number of merge MVP candidates
STOP
S2199

FIG. 21

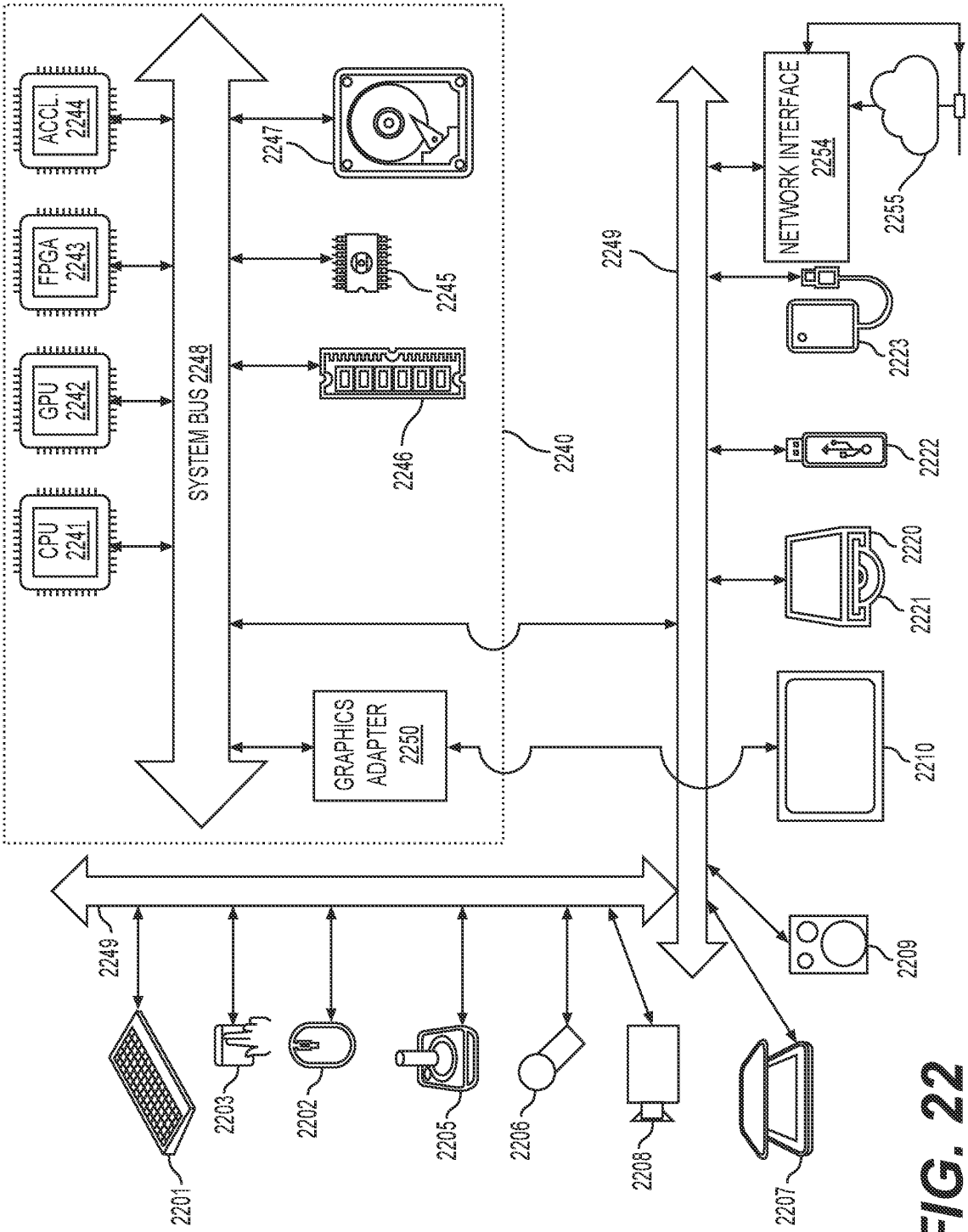
CPU 2241
GPU 2242
FPGA 2243
ACCL 2244
SYSTEM BUS 2248
2247
2245
2246
2240
GRAPHICS ADAPTER 2250
2249
NETWORK INTERFACE 2254
2255
2223
2222
2220
2221
2210
2209
2207
2208
2206
2205
2202
2203
2201

FIG. 22