
INPUT SIGNAL
ENCODER
BIT STREAM
COMM. CHANNEL OR STORAGE MEDIUM
BIT STREAM
DECODER
SYNTHESIZED SIGNAL

FIG. 1

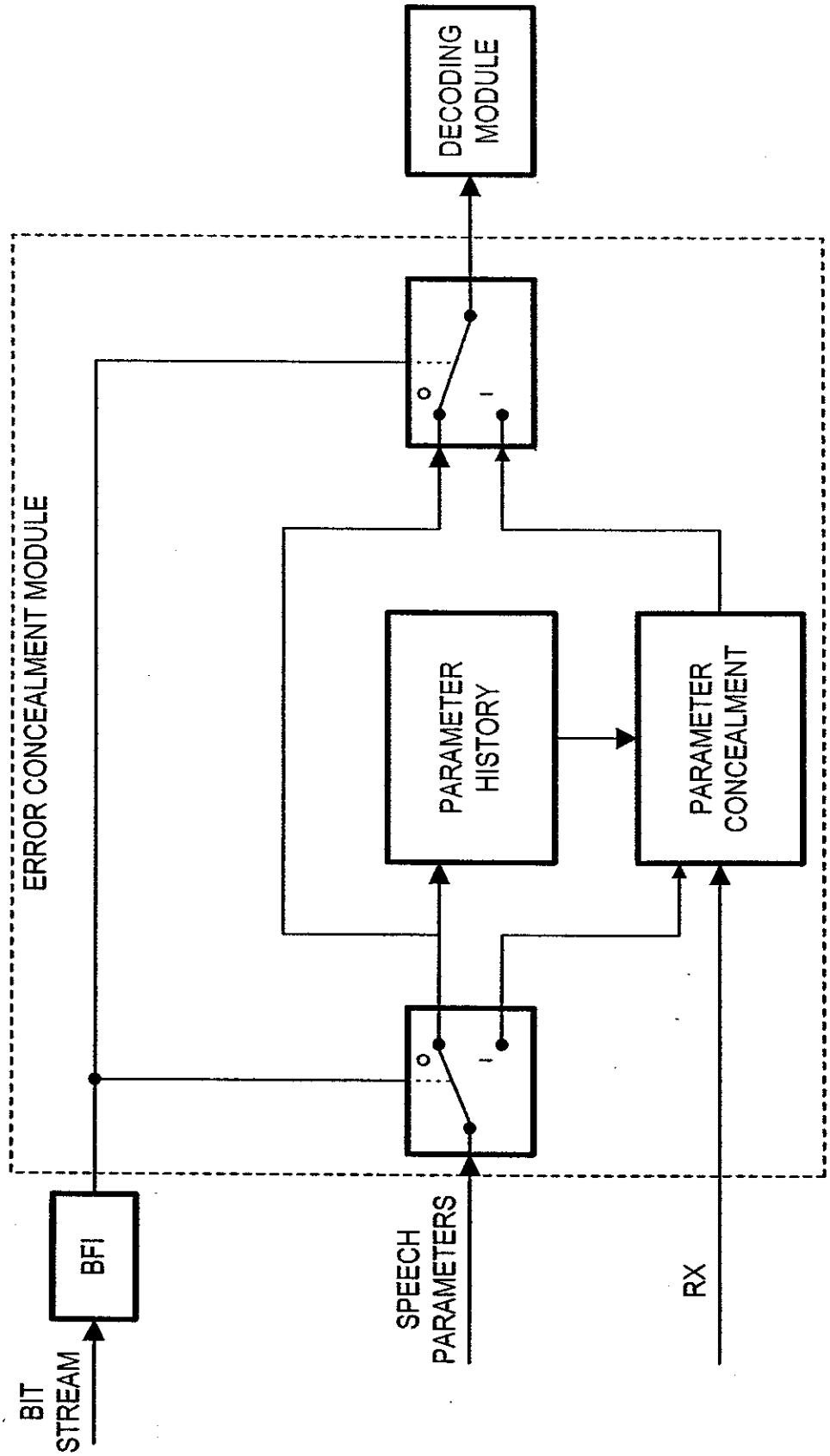
DECODING MODULE
ERROR CONCEALMENT MODULE
PARAMETER HISTORY
PARAMETER CONCEALMENT
BFI
BIT STREAM
SPEECH PARAMETERS
RX

FIG. 2

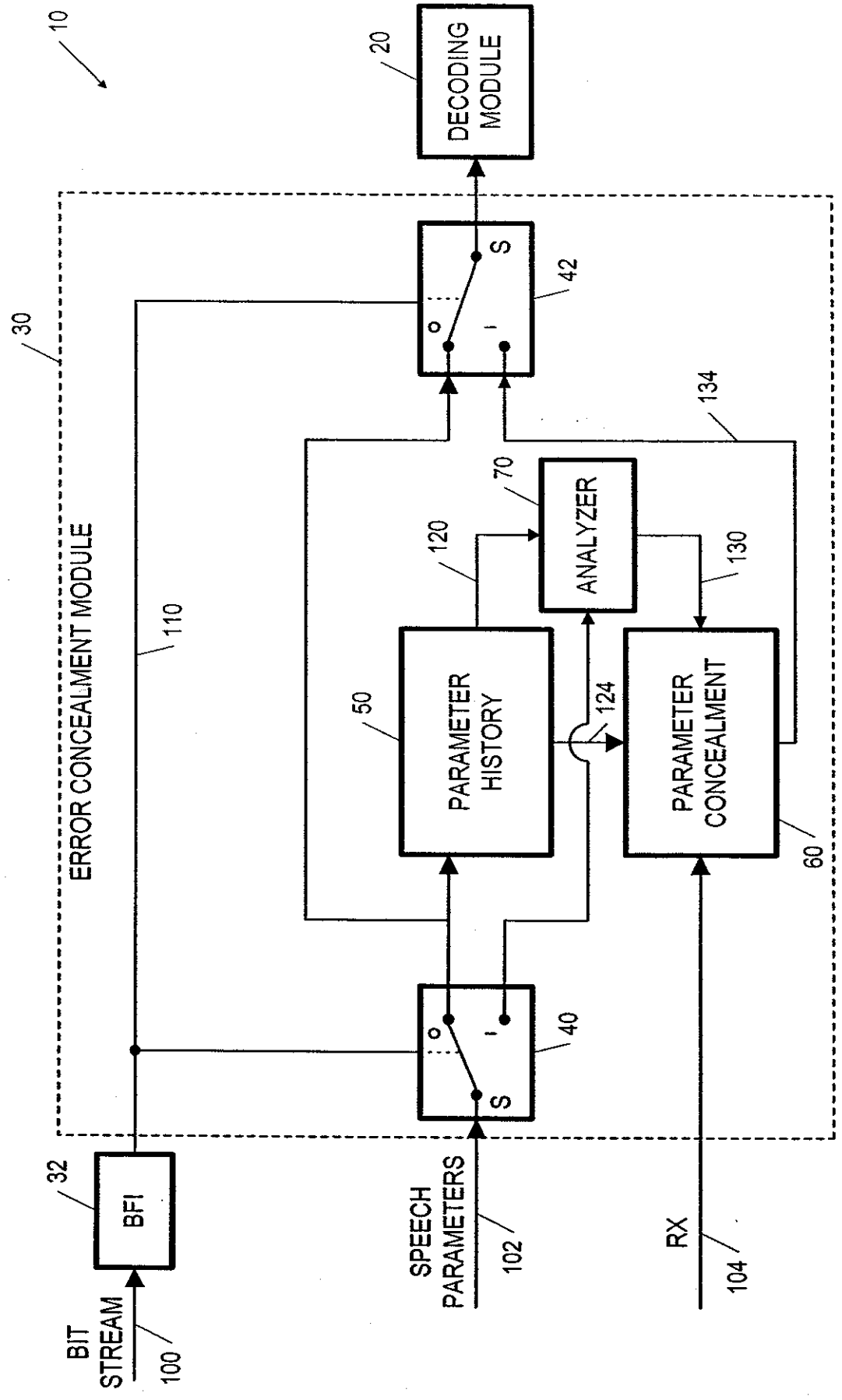
10
20
DECODING MODULE
30
ERROR CONCEALMENT MODULE
42
S
0
1
134
70
ANALYZER
120
130
110
50
PARAMETER HISTORY
124
PARAMETER CONCEALMENT
60
40
S
0
1
32
BFI
BIT STREAM
100
SPEECH PARAMETERS
102
RX
104

FIG. 3

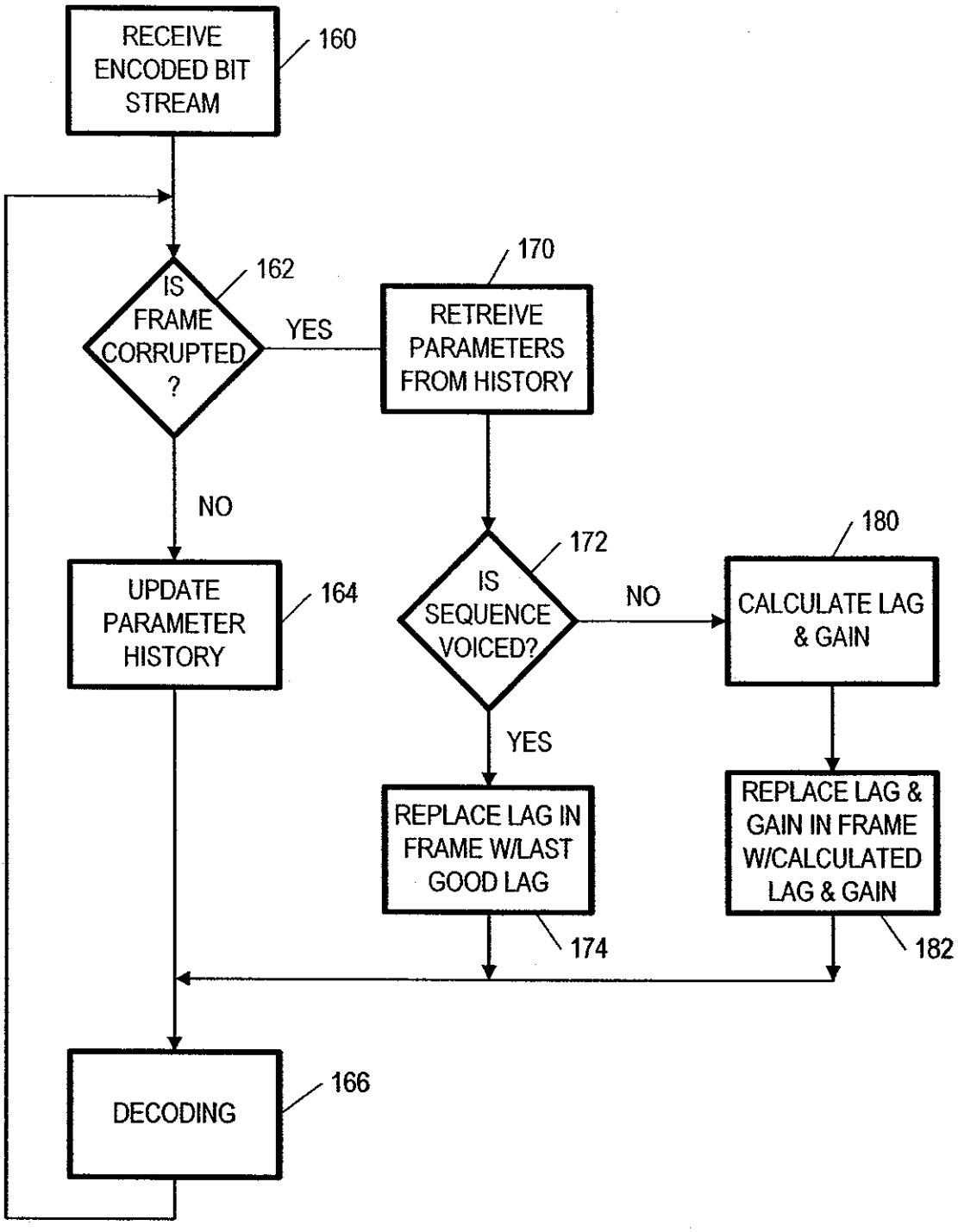
RECEIVE ENCODED BIT STREAM
160
IS FRAME CORRUPTED ?
162
YES
NO
RETREIVE PARAMETERS FROM HISTORY
170
UPDATE PARAMETER HISTORY
164
IS SEQUENCE VOICED?
172
NO
YES
CALCULATE LAG & GAIN
180
REPLACE LAG IN FRAME W/LAST GOOD LAG
174
REPLACE LAG & GAIN IN FRAME W/CALCULATED LAG & GAIN
182
DECODING
166

FIG. 4

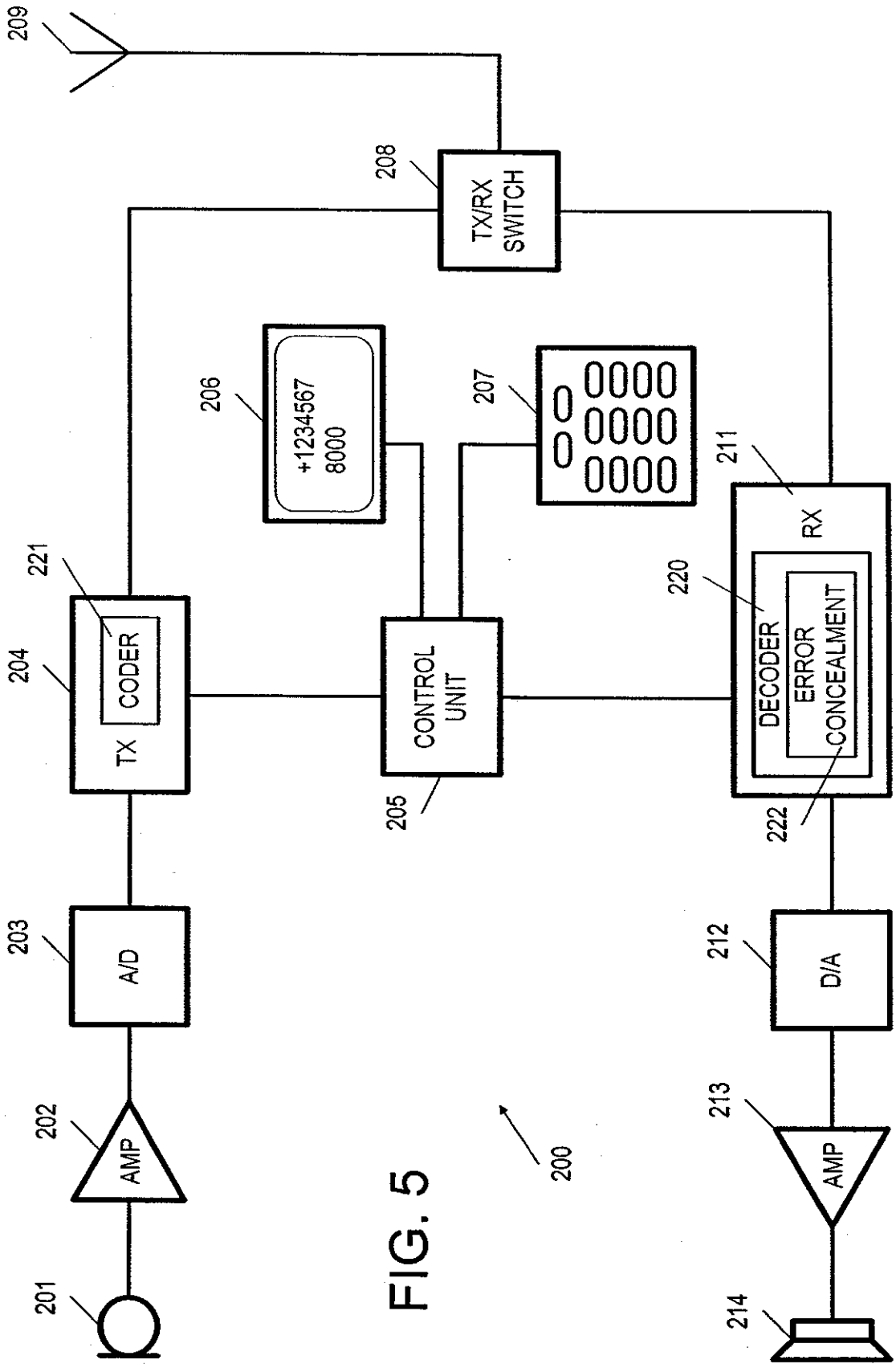
209
208
TX/RX SWITCH
206
+1234567 8000
207
0000 0000 0000
211
RX
221
CODER
204
TX
CONTROL UNIT
205
220
DECODER
ERROR CONCEALMENT
222
203
A/D
212
D/A
202
AMP
213
AMP
201
214
200

FIG. 5

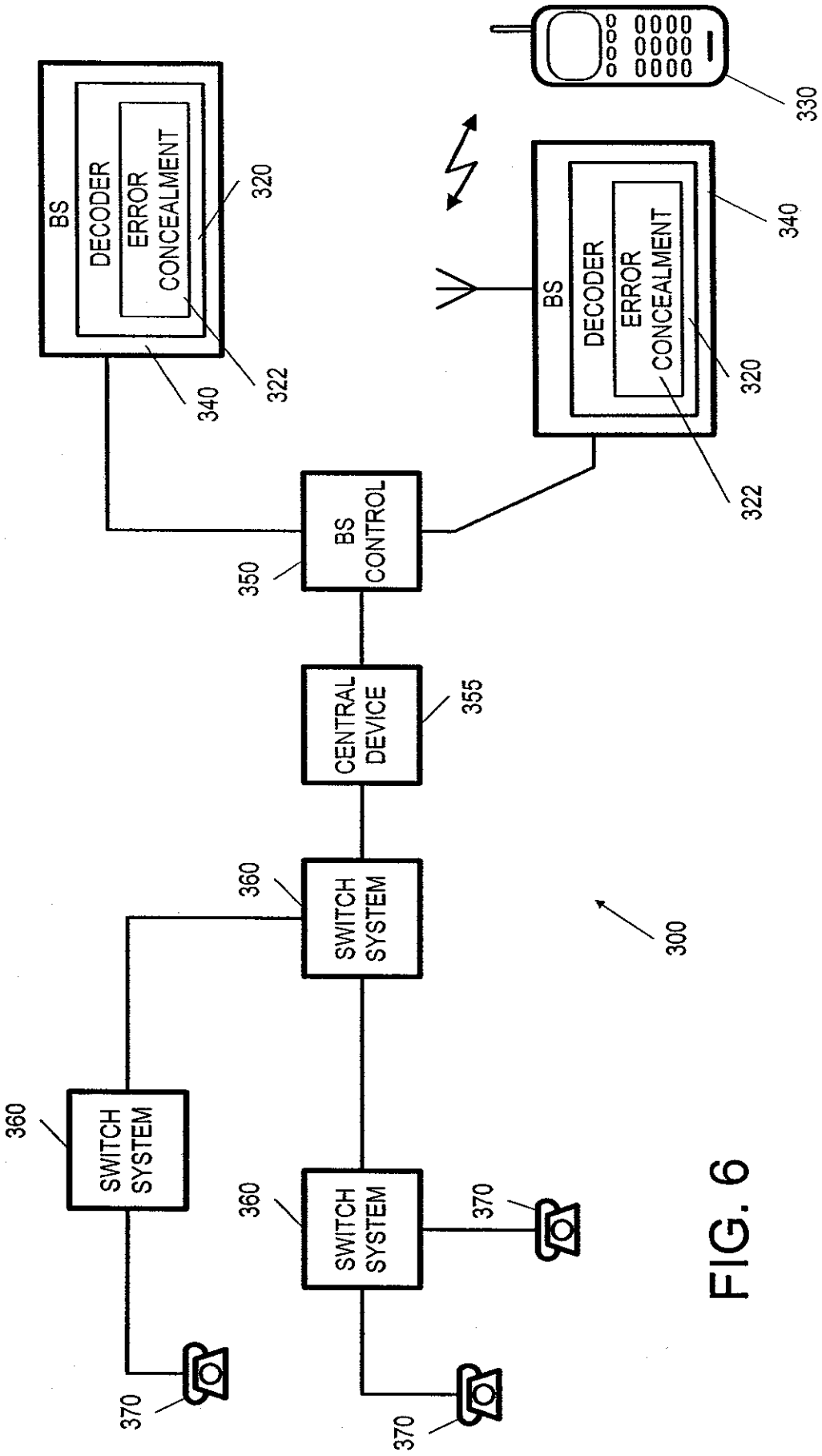
BS
DECODER
ERROR
CONCEALMENT
320
322
340
330
BS
DECODER
ERROR
CONCEALMENT
340
320
322
BS
CONTROL
350
CENTRAL
DEVICE
355
SWITCH
SYSTEM
360
300
SWITCH
SYSTEM
360
SWITCH
SYSTEM
360
370
370
370

FIG. 6

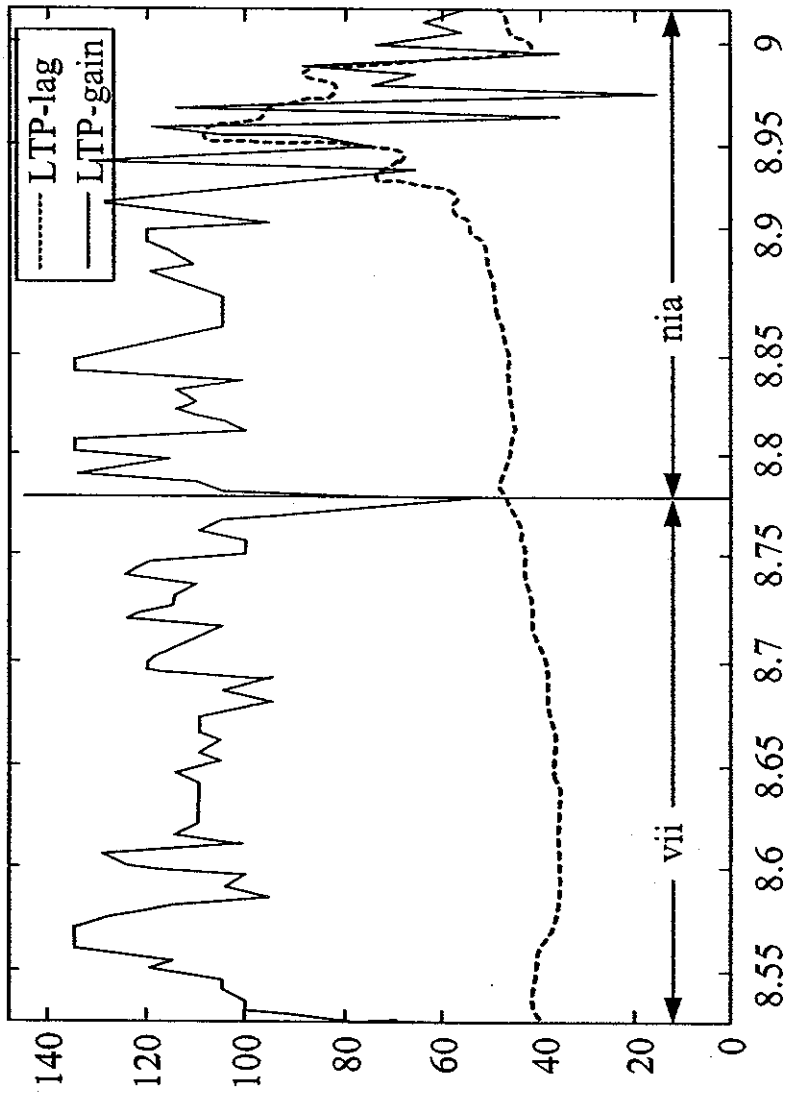
LTP-lag
LTP-gain
vii
nia
Time
140
120
100
80
60
40
20
0
8.55
8.6
8.65
8.7
8.75
8.8
8.85
8.9
8.95
9

FIG. 7

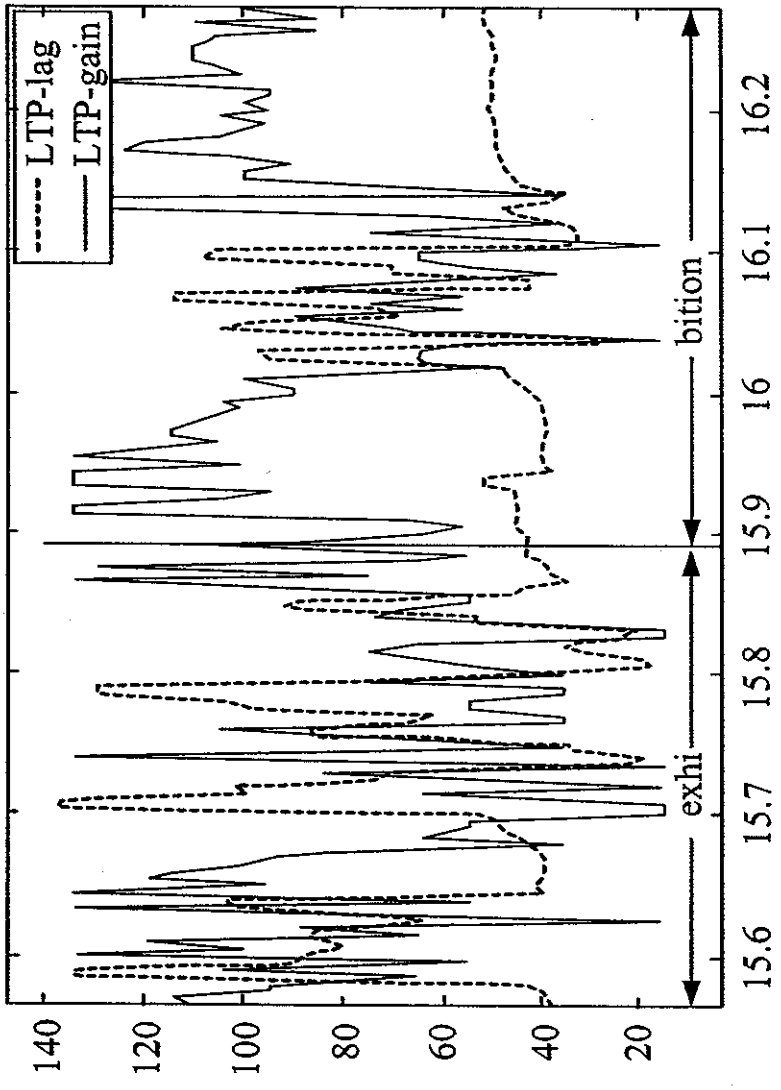
LTP-lag
LTP-gain
140
120
100
80
60
40
20
15.6
15.7
15.8
15.9
16
16.1
16.2
Time
exhi
bition

FIG. 8

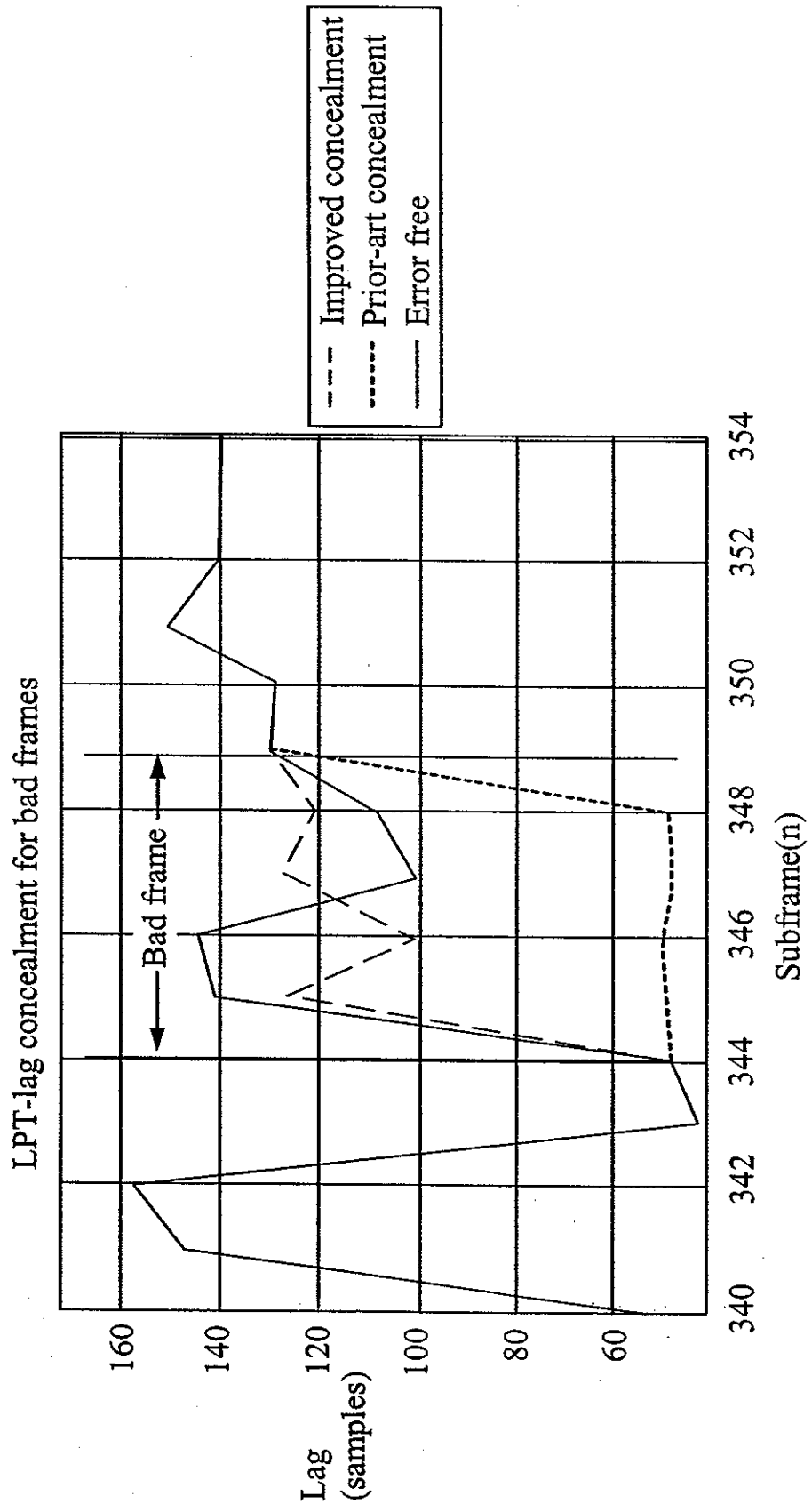
LPT-lag concealment for bad frames
Improved concealment
Prior-art concealment
Error free
Bad frame
Lag (samples)
160
140
120
100
80
60
340
342
344
346
348
350
352
354
Subframe(n)

FIG. 9

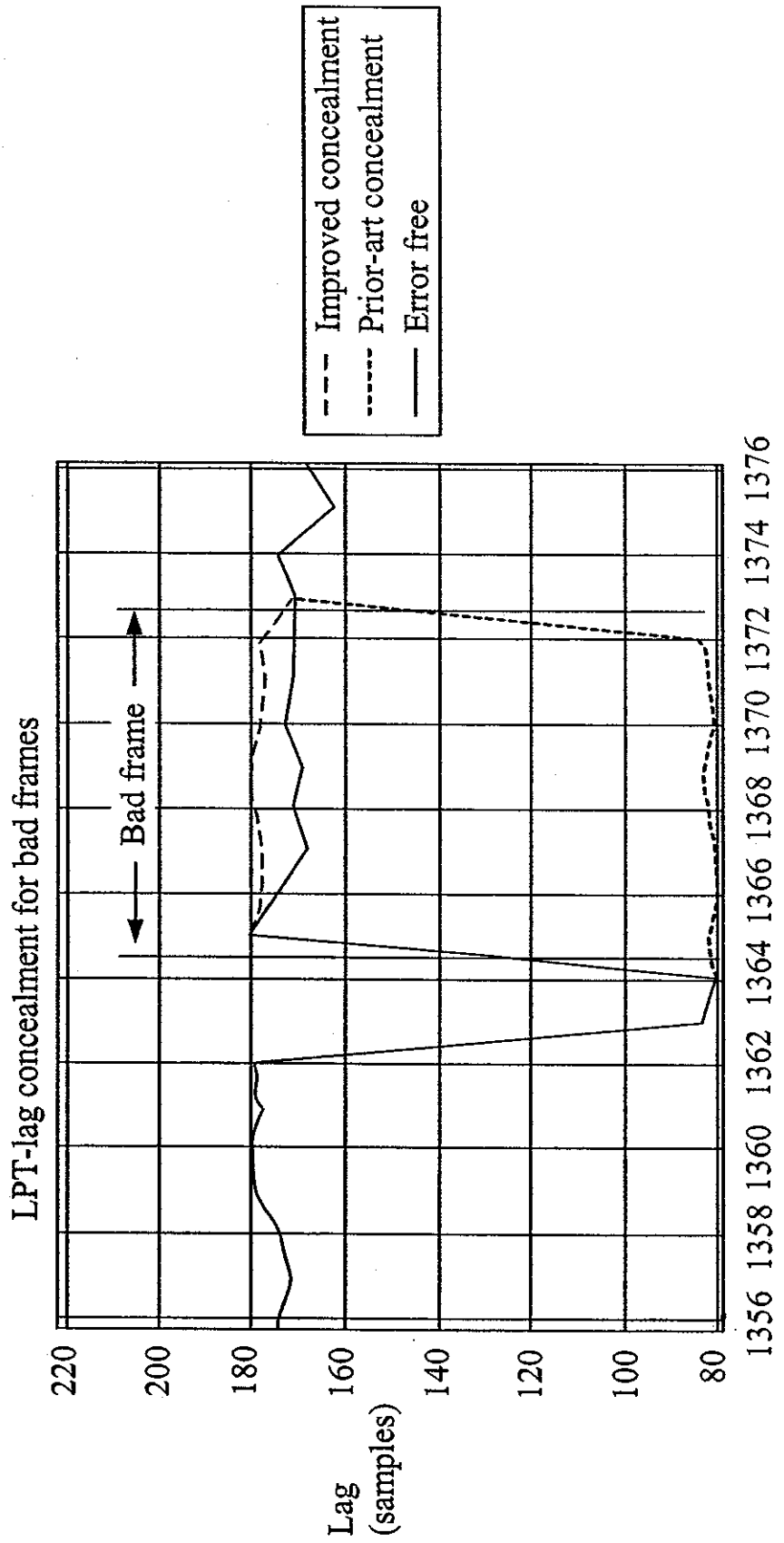
LPT-lag concealment for bad frames
Improved concealment
Prior-art concealment
Error free
Bad frame
Lag (samples)
220
200
180
160
140
120
100
80
1356 1358 1360 1362 1364 1366 1368 1370 1372 1374 1376
Subframe(n)

FIG. 10

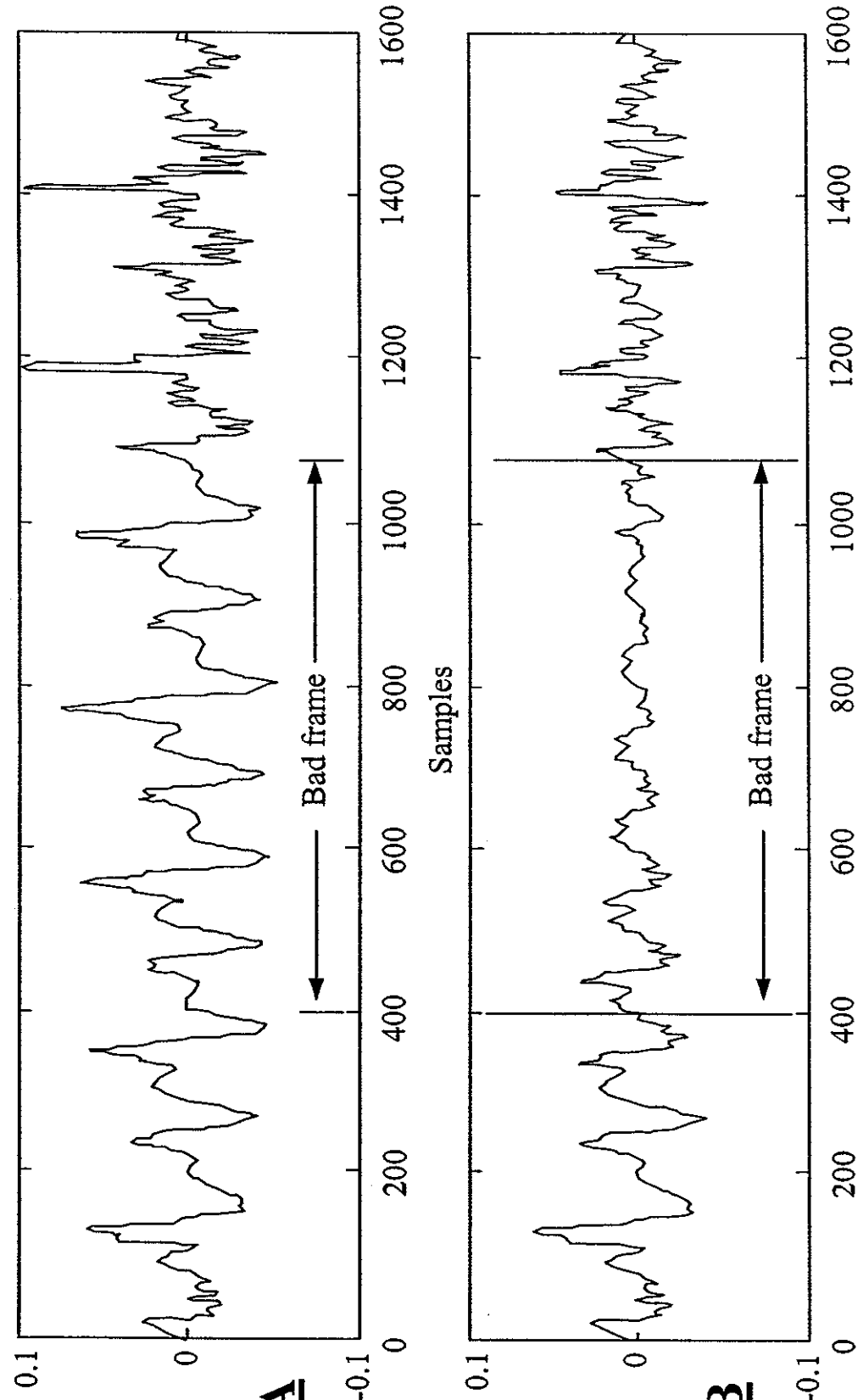

FIG. 11A

FIG. 11B

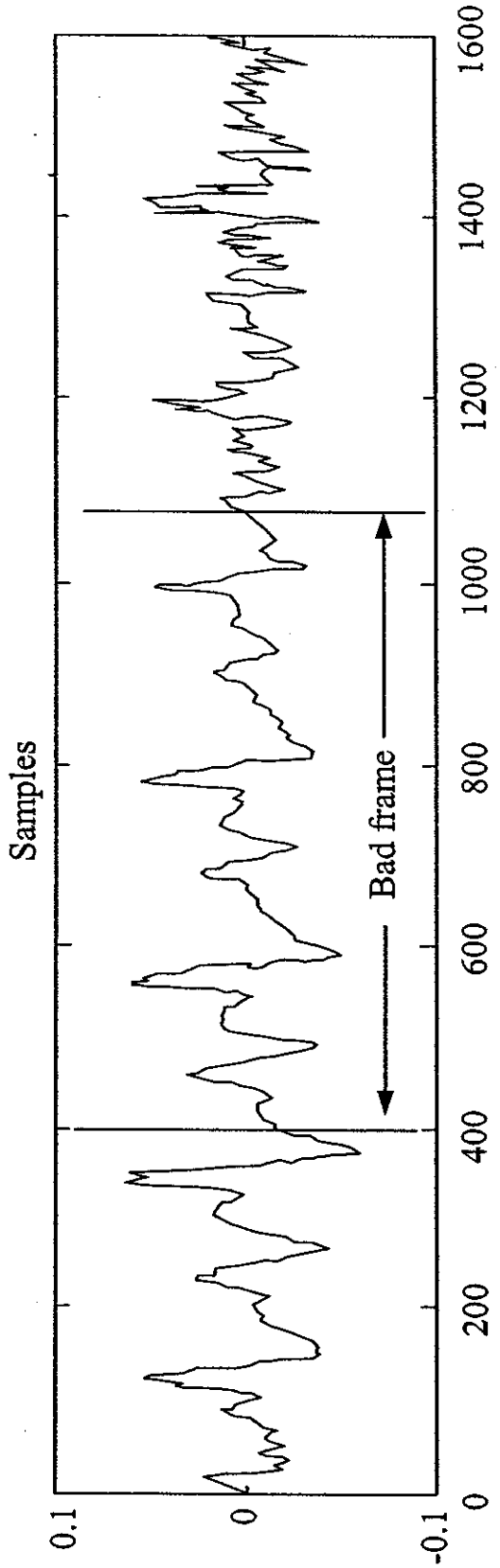
Samples
0.1
0
-0.1
0
200
400
600
800
1000
1200
1400
1600
Samples
Bad frame

FIG. 11C