[図1]

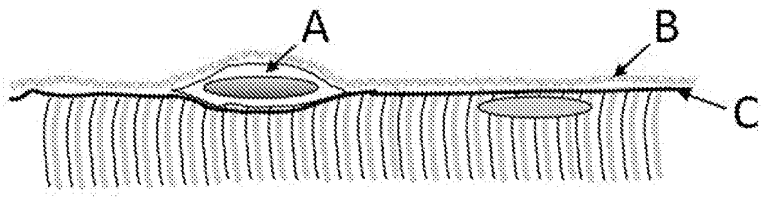

[図2]

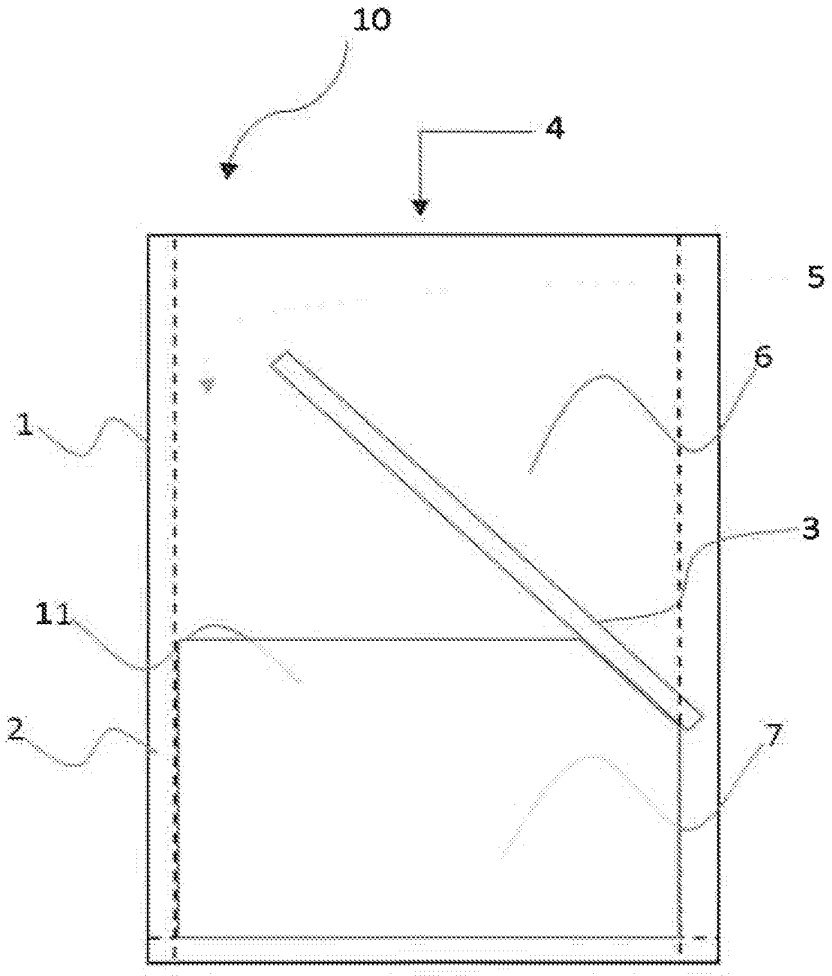

[図3]

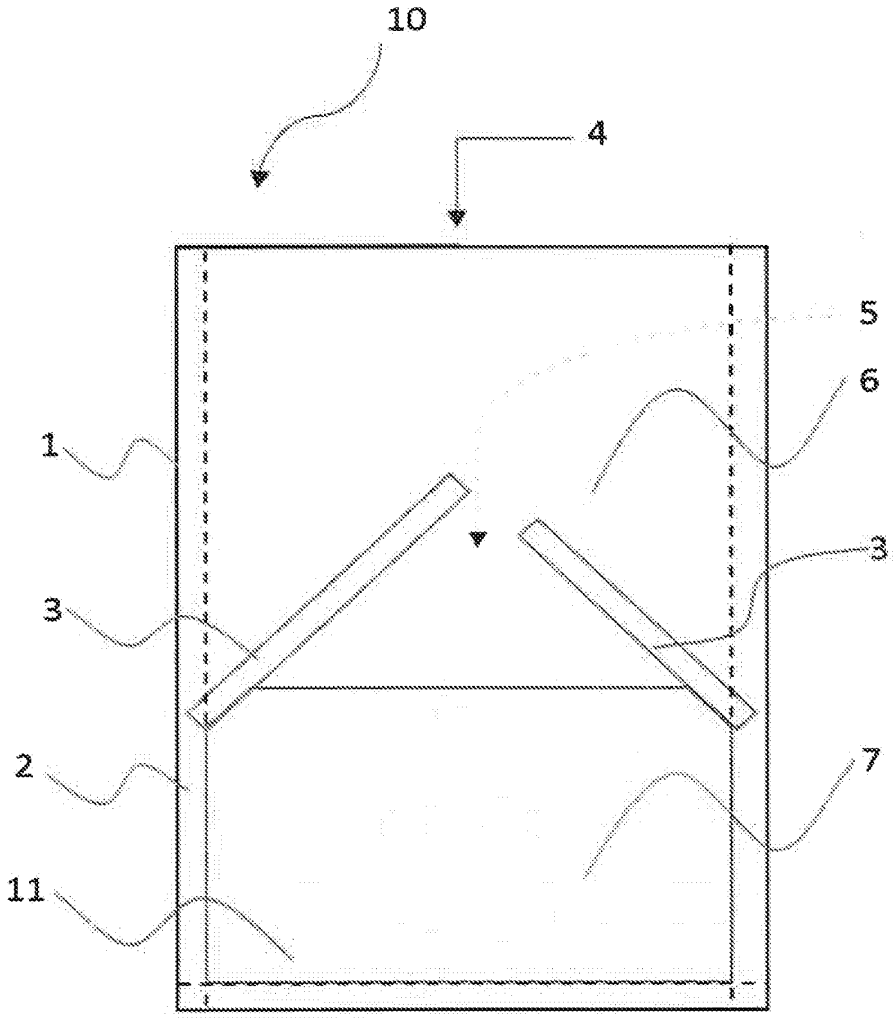

[図4]

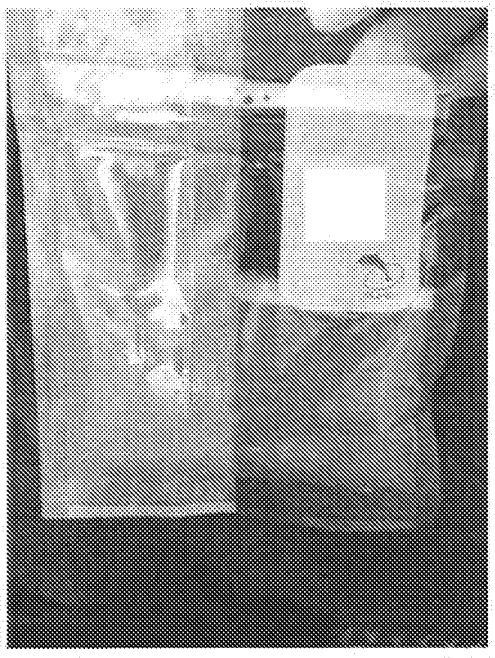

[図5]

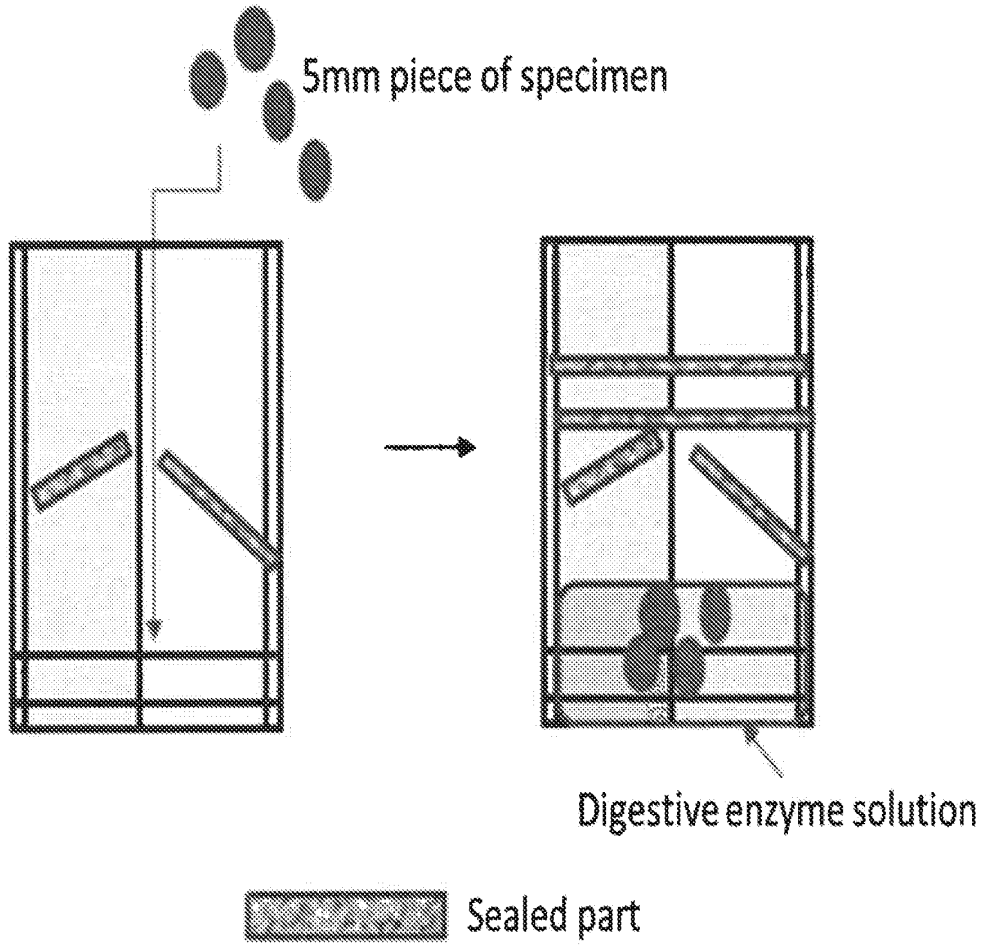
5mm piece of specimen
Digestive enzyme solution
Sealed part

[図6]

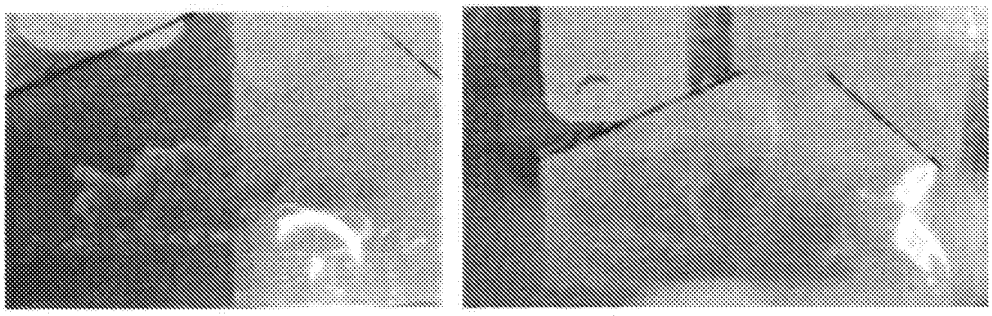
A
B

[図7]

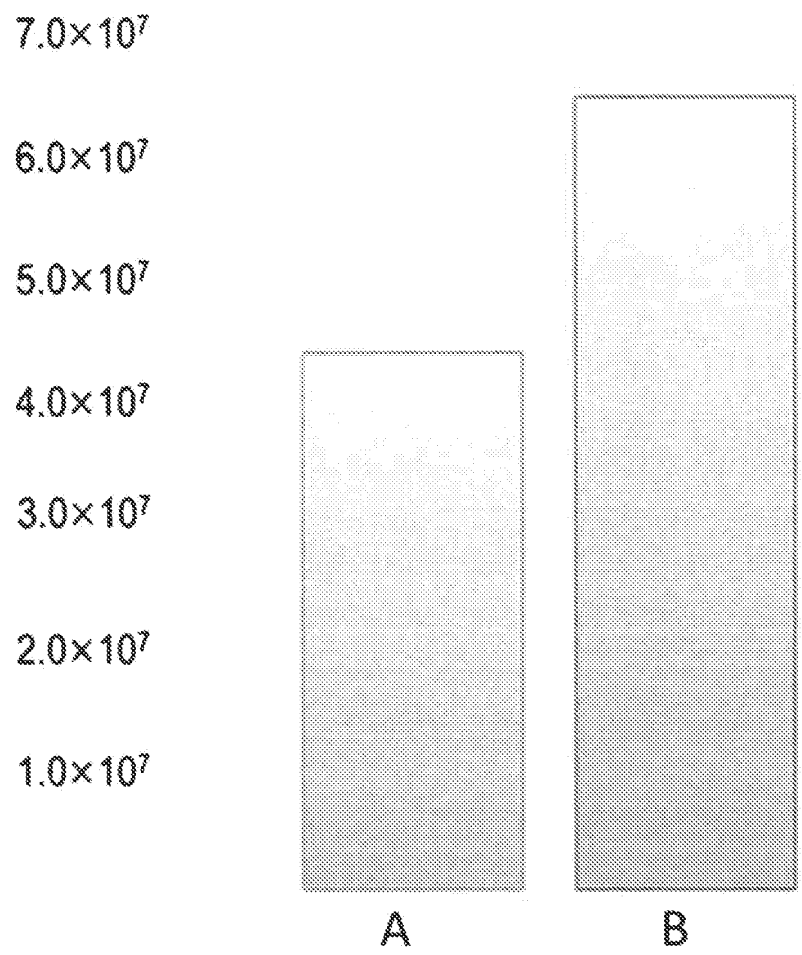

[図8]

