PCT WORLD INTELLECTUAL PROPERTY ORGANIZATION
International Bureau

INTERNATIONAL APPLICATION PUBLISHED UNDER THE PATENT COOPERATION TREATY (PCT)

(51) International Patent Classification 6 : H03M	A2	(11) International Publication Number: WO 98/21829
		(43) International Publication Date: 22 May 1998 (22.05.98)

(21) International Application Number: PCT/US97/21825

(22) International Filing Date: 13 November 1997 (13.11.97)

(30) Priority Data:
08/749,235 14 November 1996 (14.11.96) US

(71) Applicant: QUANTUM CORPORATION [US/US]; 500 McCarthy Boulevard, Milpitas, CA 95035 (US).

(72) Inventors: WENG, Lih-Jyh; 95 Ardmore Road, Needham, MA 02194 (US). SHEN, Ba-Zhong; Apartment 304, 285 Plantation Street, Worcester, MA 01604 (US).

(74) Agents: CHUN, Debra, A. et al.; Quantum Corporation, 500 McCarthy Boulevard, Milpitas, CA 95035 (US).

(81) Designated States: AU, CA, CN, JP, KR, SG, European patent (AT, BE, CH, DE, DK, ES, FI, FR, GB, GR, IE, IT, LU, MC, NL, PT, SE).

Published
Without international search report and to be republished upon receipt of that report.

(54) Title: MODIFIED REED SOLOMON CODE SELECTION AND ENCODING SYSTEM

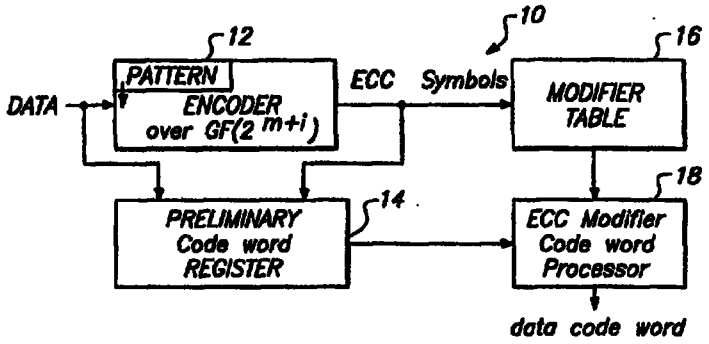

(57) Abstract

An error correction system includes an encoder that uses a modified Reed-Solomon code to encode m-bit data symbols over $GF(2^{m+i})$ and form a preliminary code with d-1 (m+i)-bit ECC symbols. The encoder then modifies the ECC symbols by combining the preliminary code word with a combination of one or more modifying code words to produce modified ECC symbols that have i bits set in a pre-selected pattern. This combination also results in "R" pseudo redundancy symbols that include the i-bit pattern being appended to the modified ECC symbols. The encoder truncates the i-bit pattern from each of the ECC symbols and the pseudo-redundancy symbols, to produce a data code word that has symbols that are elements of $GF(2^m)$. To decode the data code word, the decoder fills in the i-bit pattern in each of the data code word symbols and decodes the code word, treating the first R of the modified ECC symbols as code word data, or information, symbols, and the remaining modified ECC symbols and the pseudo redundancy symbols as code word ECC symbols. The system determines for the encoder the generator polynomial, g(x), and the modifying code words by determining a $g(x) = (x+\alpha^L)*(x+\alpha^{L+1})...*(x+\alpha^{L+d-2})$ with L=1, 2,... that produces i*(d-1) modifying code words that have only one selected bit of the i-bit pattern set to a one. If the selected code $GF(2^{m+i})$ is $GF(2^t)^{h+j}$ and $GF(2^m) = GF(2^t)^h$, the system minimizes the size of a look-up table that contains information relating to the modifying code words by using as a ground field $GF(2^t)$ and storing in the table for each of the d-1 ECC symbols a first coefficient of a modifying code word that has in place of the i-bit pattern the $GF(2^t)$ element α^0. The system then produces the modifying code words by combining the stored coefficient with appropriate elements of $GF(2^t)$ and encoding the result.