

FIG. 1a

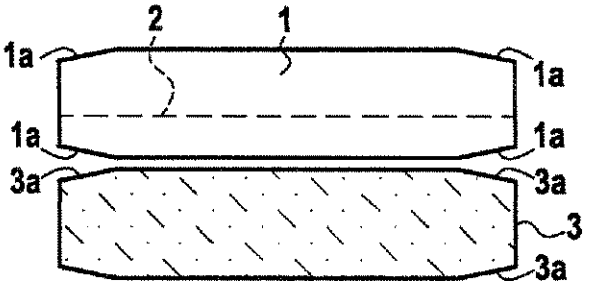

FIG. 1b

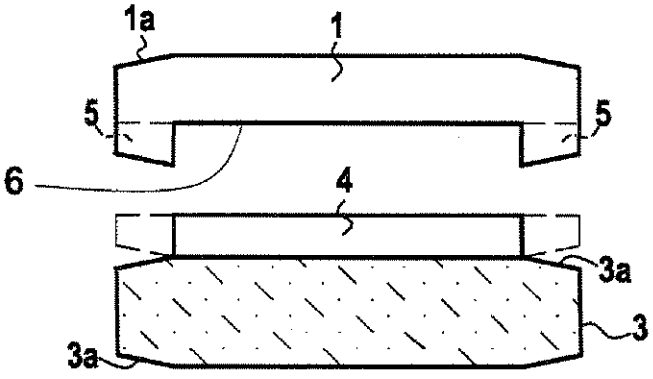

FIG. 1c

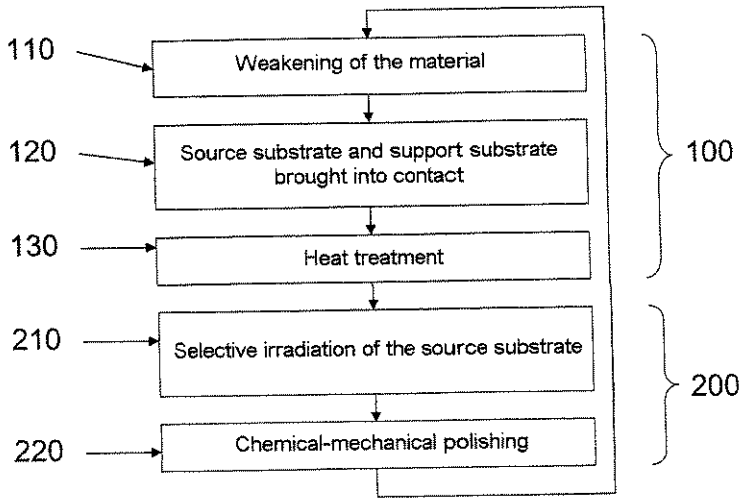
110
Weakening of the material
120
Source substrate and support substrate brought into contact
130
Heat treatment
100
210
Selective irradiation of the source substrate
220
Chemical-mechanical polishing
200

FIG. 2

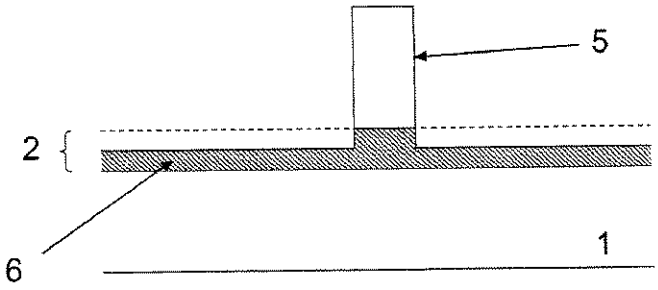

FIG. 3